1	ASSEMBLING OF THE HARDWARE Dr - wooden windows
2	ASSEMBLING OF THE HARDWARE Tw - PVC-U windows
3	DRIVE GEARS
4	CORNERS, ENDS, CORNER DRIVE GEARS
5	LOCKS, FOOTINGS, CONNECTORS EXTENSION RODS
6	STAYS, STAY ARMS
7	HINGES
8	STRIKER PLATES
9	ACCESORIES, SUPPLEMENTARY ELEMENTS
10	SPECIAL HARDWARE
11	ALU KARO
12	TAKT-150 HARDWARE
13	DOOR HARDWARE
14	FITTING INSTRUCTIONS, LIST OF JIGS
15	APPROVALS, CERTIFICATIONS, ATTESTATIONS, WARRANTIES

Peripheral Hardware - ROMB, ROMB 2000 and ROMB 3000 *Systems*

GENERAL CHARACTERISTIC OF THE PRODUCT

Hardware sets fitted on the girth of the sash and frame of windows and balcony doors, depending on their functions, allow :

- turning (opening) or tilting of the same sash of a window or balcony door (turn-tilt hardware)
- turning (opening) of the sash (turn hardware)
- tilting of the sash (tilt hardware)

Turn-tilt sashes enable optimal ventilation of the room, as a turned sash makes it possible to quickly ventilate the room, while a tilted sash facilitates non-stop ventilation.

Turn / tilt plus turn hardware in double windows makes it possible to tilt or turn one of the sashes and only turn the other sash.

Turn / tilt hardware with enhanced resistance to burglary fitted in double windows have, in comparison to standard hardware, the following additional anti-burglary devices:

- handle with a cylinder lock,
- blockage of the handle turning,
- corners with anti-unhingement deadbolts,
- reinforced anti-burglary striker-plates,
- anti-drill shield of the drive mechanism,

Sets of turn / tilt, turn, tilt and turn / tilt plus turn for PVC-U windows and balcony doors are manufactured and assembled in accordance with **„METALPLAST KARO ZŁOTÓW S.A. Hardware Catalogue"**

DESIGNATION AND SCOPE OF USE

DESIGNATION

ROMB and ROMB 2000 turn / tilt, turn, tilt and turn / tilt plus turn hardware is designated to be used in windows and balcony doors made of PVC-U profiles or wooden windows used in construction.

ROMB 3000 turn / tilt anti-burglary reinforced hardware is to be used in windows and balcony doors made of PVC-U or wood sufficiently resistant to burglary.

SCOPE OF USE

Turn / tilt hardware when fitted in windows and balcony doors allows turning or single-stage tilting of the stash in various ventilation configurations, depending on the needs.

Turn hardware when fitted in windows and balcony doors allows closing and turning (opening) of window sashes.

Tilt hardware when fitted in windows allows closing and tilting of sashes.

Turn / tilt plus turn hardware when fitted in double windows allows tilting or turning (opening) of the turn / tilt sash and turning (opening) of the turn sash.

Turn / tilt hardware ordered with micro-ventilation allows setting the slit size to ca $6^{\pm 1}$ mm to ensure the inflow of the air into the room. The hardware should be used especially in windows designated for rooms with gravity ventilation.

Turn / tilt hardware has the possibility of additional application of the driver gear blockade. The blockade acts as a safeguard against mishandling of the hardware in an opened sash.

At the customer request turn / tilt, turn and turn / tilt plus turn hardware with a lowered handle (however not below 1/3 Hw) can be fitted in windows to be used by disabled persons. This solution makes it easier to operate the hardware from a wheelchair.

TECHNICAL DATA OF PERIPHERAL HARDWARE SYSTEMS ROMB, ROMB 2000 and ROMB 3000

Peripheral hardware systems ROMB, ROMB 2000 and ROMB 3000 are used for closing, turning and tilting of window sashes. Operating functions are performed with a handle. Hardware elements are fitted in window and frame stiles. The hardware may be used in wooden and PVC-U windows.

TECHNICAL DATA:

Maximum weight of sash.....	80 kg; 100 kg; 130 kg
Grove (hardware) width.....	16 mm
Distance from handle axis to front.....	15 mm; 7,5 mm
Height of deadbolt from front.....	8 mm
Deadbolt throw.....	2×17 mm
Spacing of holes for handle screws.....	43 mm
Minimum clearance.....	12 mm

NOTE: Dependance Sw / Hw < 1,5 should be observed.

The hardware is equipped with a blockade that eliminates the possibility of displacement of the handle into "turned" position when the sash is tilted (blockade in stay). It is possible to fit a gear blockade that prevents moving the hardware from "turned" into "tilted" position when the sash is opened. This function is performed by sash lift with a blockade.

ROMB hardware for windows w/o post. This hardware is used for closing and turning of window sashes. Operating functions are performed with a lever. Hardware elements are fitted in window and frame stiles . The hardware can be used in wooden and PVC-U windows.

TECHNICAL DATA:

Maximum weight of sash.....	80 kg; 100 kg (130 kg - heavy version)
Groove (hardware) width.....	16 mm
Locking slider throw.....	8 mm
Clearance.....	12 mm

In order to facilitate selecting and assembling of the hardware it is recommended to use **OKNO 1.0** hardware selection computer programme (or **Stolcad** hardware selection programme with an overlay for ROMB hardware)

Any comments relating to this catalogue and our products can be addressed to our Marketing Department:
tel. +48 67 265 04 19 e-mail: romb@grupakety.com

„METALPLAST KARO ZŁOTÓW" S.A. has implemented and maintained a quality management system based on the requirements of the international standards of the series: ***ISO 9001 - 2000.***

The system includes:
- development of the manufacture of products
- manufacture
- control and research
- use, exploitation and servicing
- warranty and complaints handling

The factory has been also accredited a research laboratory in accordance with ***PN EN ISO/IEC 17025:2005*** standard, which ensures comprehensive testing of manufactured products.

PREFERENCES FOR PUBLIC PROCUREMENT TENDERS

ROMB, ROMB 2000 and ROMB 3000 hardware systems are Polish products, the use of which gives preferences when taking part in public procurement tenders in accordance with the *Council of Ministers Regulation of 28.12.1994 (Official Journal No 140, item 776)*

Our products have the required technical specifications and always updated examinations. They guarantee the conformity of manufactured products with reference documentation, which in turn allows us to place the construction industry markings on ROMB, ROMB 2000 and ROMB 3000 hardware.

METALPLAST KARO ZŁOTÓW S.A. is continuously working on upgrading the hardware's parameters and functions which results in further improvements and modernisations of ROMB hardware.

USAGE CONDITIONS

Maximum weight of sashes

The maximum weight of window sashes that can be fitted with a set of hardware is specified based on the load capacity of the weakest element of the set and amounts to: 80 kg, 100 kg and 130 kg.

Dimensions of sashes

The minimum and maximum width and height of window sash to notch are specified according to tables 1 and 2. Terminal sash dimensions determining the dimensions of elements and subassemblies of „ROMB" and „ROMB 2000" hardware are provided in table 1, and of „ROMB 3000" hardware with reinforced anti-burglary resistance in table 2.

Table 1 - ROMB, ROMB 2000, ROMB TwO and ROMB S5

Sw- width of sash to notch [mm]	Hw - height of sash to notch [mm]
RU with handle in fixed position	
290 - 1600	360 - 2400
RU with handle in central position	
290 - 1600	505 - 2400
R with handle in fixed position	
290 - 1450	360 - 2400
R with handle in central position	
290 - 1450	505 - 2400
R with drive gear strip „S"	
290 - 800	340 - 2400
U with drive gear strip „UC"	
470 - 1700	do 800
U with drive gear strip „M"	
530 - 1680	505 - 1450
window w/o post with drive gear „M" strip	
290 - 1450	590 - 2400
window w/o post with footing „BM", connector „BM", drive gear „B".	
290 - 1450	590 - 2400

Table 2 - ROMB 3000

Sw - width of sash to notch [mm]	Hw - height of sash to notch [mm]
RU with handle in fixed position	
290 - 1200	360 - 2400
RU with handle in central position	
290 - 1200	505 - 2400

DESIGN GUIDELINES

The weight of glass panes should be specified based on the information from glass panes producers (1 m^2 of glass pane 1 mm thick = 2,5 kg - see table 3) - example - Fig.1, and in case of glass panes produced in Poland according to PN-B-13079:1997.

Glass thickness [mm]	Weight 1 m^2 glass [kg]
28	70
24	60
20	50
16	40
12	30
8	20

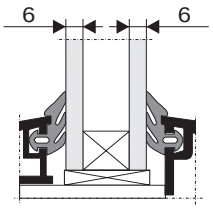

Thickness of glass 12 mm

Fig 1 - Example of a combined glass pane

The below diagrams show the dependance of glass pane weight to sash dimensions in the notch. On the basis of these diagrams admissible sash dimensions to notch are determined in relation to the maximum sash weight

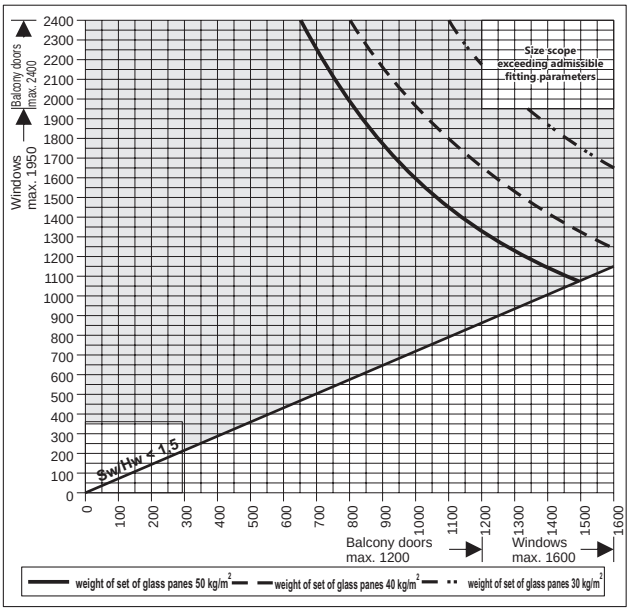

Diagram 1 - Admissible dimensions of sashes weighing up to 80 kg.

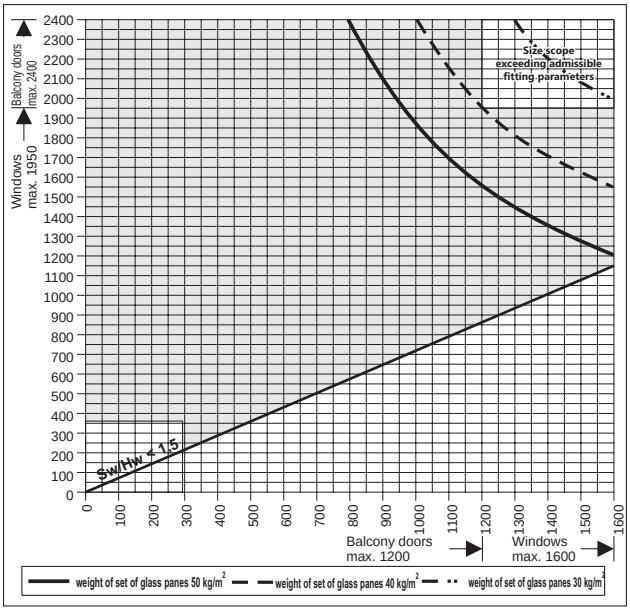

Diagram 2 - Admissible dimensions of sashes weighing up to 100 kg.

MARKINGS USED IN THE CATALOGUE:

RU - turn / tilt windows
U - tilt windows
R - turn windows
Dr - wooden windows
Tw - PVC-U windows
Sw - weight of the sash measured in notches
Hw - height of the sash measured in notches
Wzg - upper hinge bracket
Wzd - lower hinge bracket
Szg - upper hinge leaf
Szd - lower hinge leaf

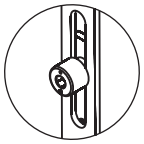

cylinder deadbolt

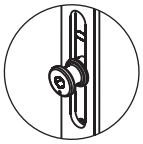

mushroom deadbolt

- symbol depicting use of subassembly in PVC-U windows.

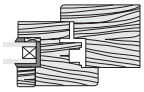

- symbol depicting use of subassembly in wooden windows.

- symbol depicting use of subassembly in aluminium windows.

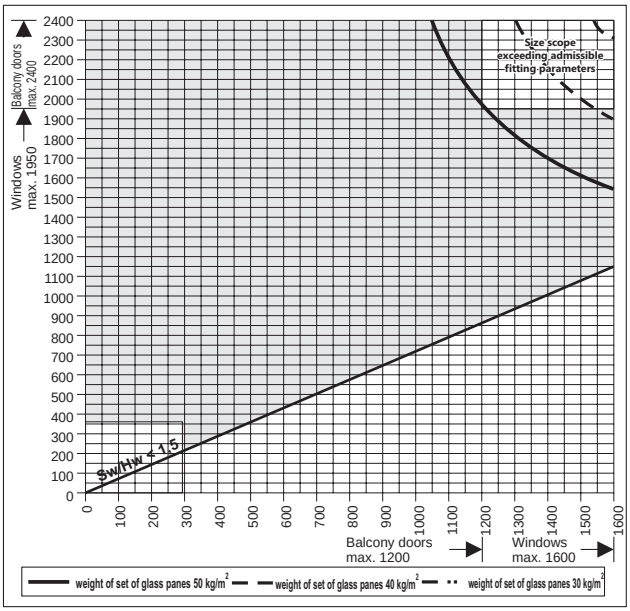

Diagram 3 - Admissible dimensions of sashes weighing up to 130 kg.

NOTE:
Windows and balcony doors producers have no right to limit the number of closing points resulting from the hardware construction.

USAGE INCONSISTENT WITH DESIGNATION

Usage inconsistent with designation takes place especially when :

- obstacles blocking the correct usage are placed within the window's operational area
- window or balcony door sashes are pressed against the frame inconsistently with designation or in an uncontrolled way (e.g. forced by wind) so that hardware, frame material or other window or balcony door elements are damaged or destroyed, or such action results in a damage
- additional loads apply to window or balcony door sashes
- a hand is placed between the frame and the sash while closing the window or balcony door (danger of injury).

CORRECT USAGE OF ROMB HARDWARE

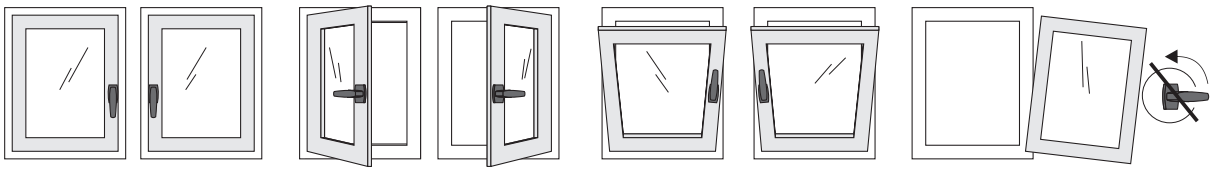

Do not turn the handle upwards when sash is opened

SAFETY OF USE

No additional weight may apply on the sash	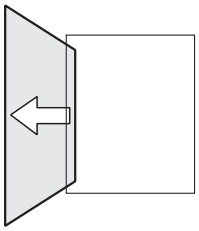 Window sash should not be pressed against the frame
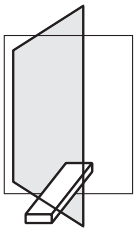 No objects should be placed between the sash and the frame	If children have access to the window, make sure a handle with a lock is fitted
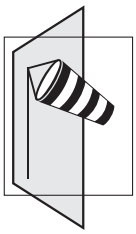 The sash should not be left open in case of strong wind	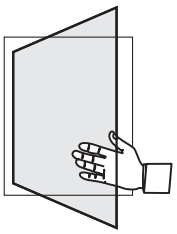 Injury may occur if the sash is shut forcibly. Hands should not be placed between the sash and the frame while closing the window

ASSEMBLING OF THE HARDWARE S5

DRIVE GEAR Z, ZN
WOODEN WINDOWS, TURN / TILT VERSION RU
LIST OF BASIC SUBASSEMBLIES

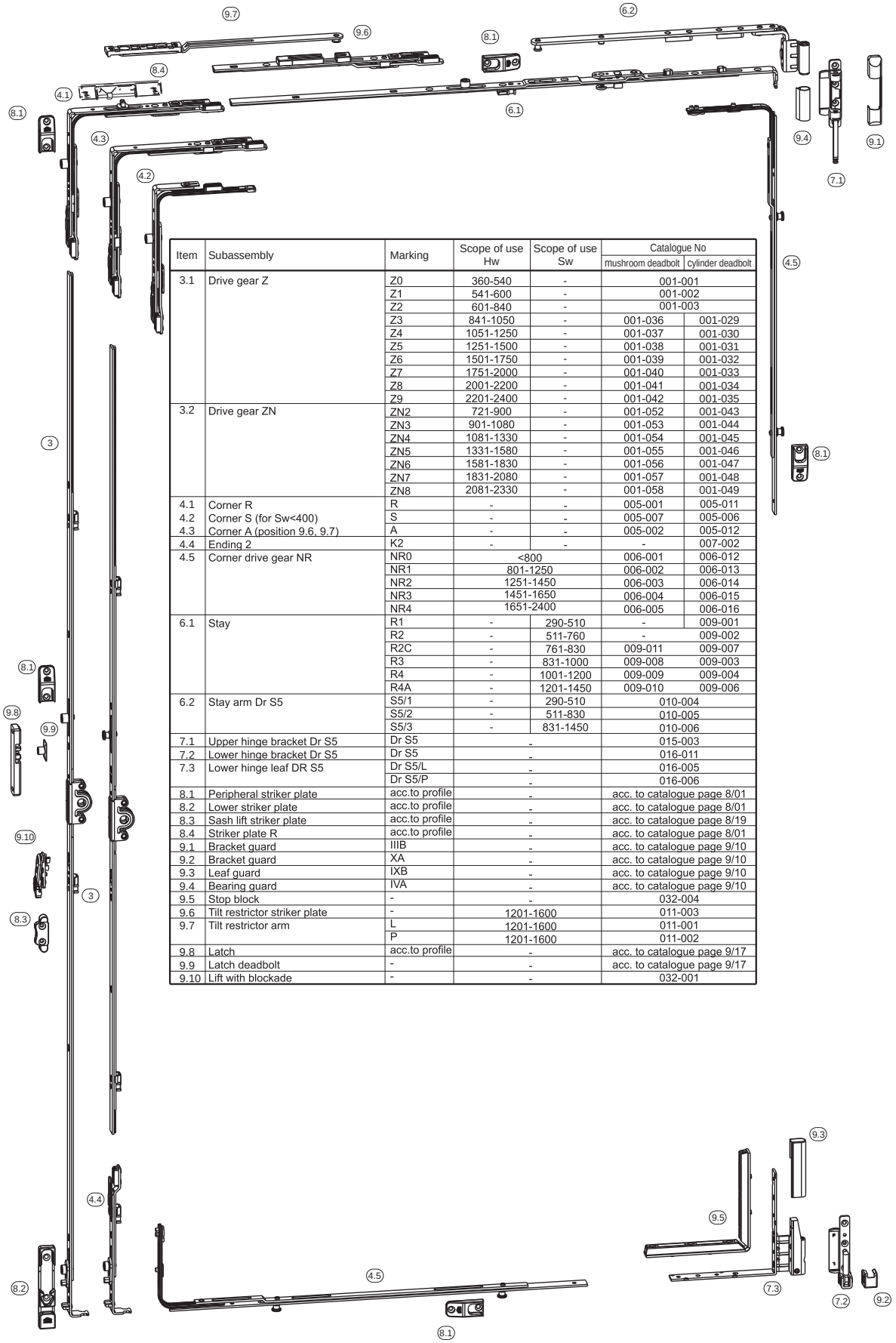

Item	Subassembly	Marking	Scope of use Hw	Scope of use Sw	Catalogue No	
					mushroom deadbolt	cylinder deadbolt
3.1	Drive gear Z	Z0	360-540	-	001-001	
		Z1	541-600	-	001-002	
		Z2	601-840	-	001-003	
		Z3	841-1050	-	001-036	001-029
		Z4	1051-1250	-	001-037	001-030
		Z5	1251-1500	-	001-038	001-031
		Z6	1501-1750	-	001-039	001-032
		Z7	1751-2000	-	001-040	001-033
		Z8	2001-2200	-	001-041	001-034
		Z9	2201-2400	-	001-042	001-035
3.2	Drive gear ZN	ZN2	721-900	-	001-052	001-043
		ZN3	901-1080	-	001-053	001-044
		ZN4	1081-1330	-	001-054	001-045
		ZN5	1331-1580	-	001-055	001-046
		ZN6	1581-1830	-	001-056	001-047
		ZN7	1831-2080	-	001-057	001-048
		ZN8	2081-2330	-	001-058	001-049
4.1	Corner R	R	-	-	005-001	005-011
4.2	Corner S (for Sw<400)	S	-	-	005-007	005-006
4.3	Corner A (position 9.6, 9.7)	A	-	-	005-002	005-012
4.4	Ending 2	K2	-	-	-	007-002
4.5	Corner drive gear NR	NR0	<800		006-001	006-012
		NR1	801-1250		006-002	006-013
		NR2	1251-1450		006-003	006-014
		NR3	1451-1650		006-004	006-015
		NR4	1651-2400		006-005	006-016
6.1	Stay	R1	-	290-510	-	009-001
		R2	-	511-760	-	009-002
		R2C	-	761-830	009-011	009-007
		R3	-	831-1000	009-008	009-003
		R4	-	1001-1200	009-009	009-004
		R4A	-	1201-1450	009-010	009-006
6.2	Stay arm Dr S5	S5/1	-	290-510	010-004	
		S5/2	-	511-830	010-005	
		S5/3	-	831-1450	010-006	
7.1	Upper hinge bracket Dr S5	Dr S5	-		015-003	
7.2	Lower hinge bracket Dr S5	Dr S5	-		016-011	
7.3	Lower hinge leaf DR S5	Dr S5/L	-		016-005	
		Dr S5/P	-		016-006	
8.1	Peripheral striker plate	acc.to profile	-		acc. to catalogue page 8/01	
8.2	Lower striker plate	acc.to profile	-		acc. to catalogue page 8/01	
8.3	Sash lift striker plate	acc.to profile	-		acc. to catalogue page 8/19	
8.4	Striker plate R	acc.to profile	-		acc. to catalogue page 8/01	
9.1	Bracket guard	IIIB	-		acc. to catalogue page 9/10	
9.2	Bracket guard	XA	-		acc. to catalogue page 9/10	
9.3	Leaf guard	IXB	-		acc. to catalogue page 9/10	
9.4	Bearing guard	IVA	-		acc. to catalogue page 9/10	
9.5	Stop block	-	-		032-004	
9.6	Tilt restrictor striker plate	-	1201-1600		011-003	
9.7	Tilt restrictor arm	L	1201-1600		011-001	
		P	1201-1600		011-002	
9.8	Latch	acc.to profile	-		acc. to catalogue page 9/17	
9.9	Latch deadbolt	-	-		acc. to catalogue page 9/17	
9.10	Lift with blockade	-	-		032-001	

KARO KRAJOWE AKCESORIA I ROZWIĄZANIA OKUCIOWE

ROMB SYSTEM

ASSEMBLING OF THE HARDWARE S5

DRIVE GEAR Z, ZN
WOODEN WINDOWS, TURN / TILT VERSION RU
LIST OF BASIC SUBASSEMBLIES

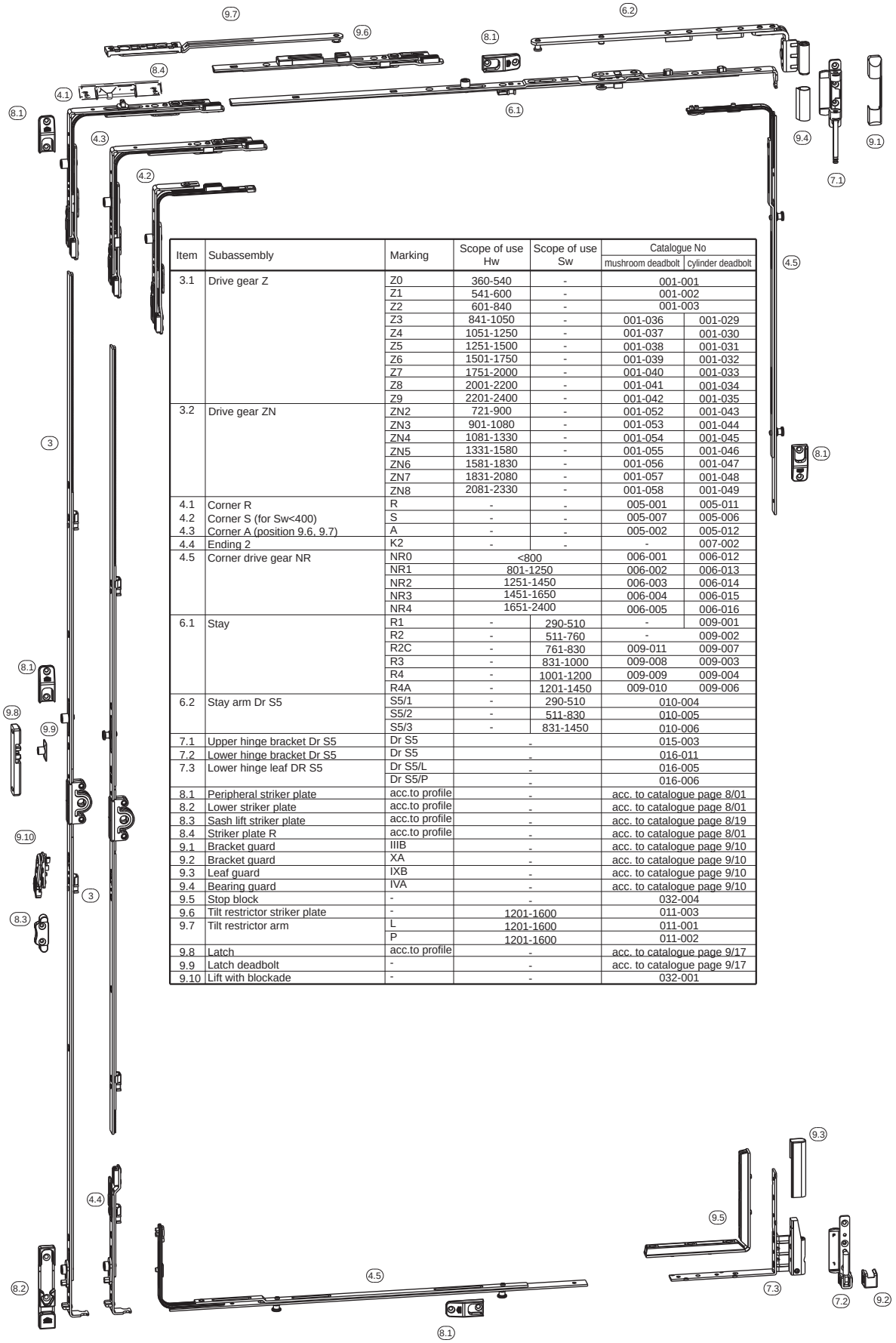

Item	Subassembly	Marking	Scope of use Hw	Scope of use Sw	Catalogue No	
					mushroom deadbolt	cylinder deadbolt
3.1	Drive gear Z	Z0	360-540	-	001-001	
		Z1	541-600	-	001-002	
		Z2	601-840	-	001-003	
		Z3	841-1050	-	001-036	001-029
		Z4	1051-1250	-	001-037	001-030
		Z5	1251-1500	-	001-038	001-031
		Z6	1501-1750	-	001-039	001-032
		Z7	1751-2000	-	001-040	001-033
		Z8	2001-2200	-	001-041	001-034
		Z9	2201-2400	-	001-042	001-035
3.2	Drive gear ZN	ZN2	721-900	-	001-052	001-043
		ZN3	901-1080	-	001-053	001-044
		ZN4	1081-1330	-	001-054	001-045
		ZN5	1331-1580	-	001-055	001-046
		ZN6	1581-1830	-	001-056	001-047
		ZN7	1831-2080	-	001-057	001-048
		ZN8	2081-2330	-	001-058	001-049
4.1	Corner R	R	-	-	005-001	005-011
4.2	Corner S (for Sw<400)	S	-	-	005-007	005-006
4.3	Corner A (position 9.6, 9.7)	A	-	-	005-002	005-012
4.4	Ending 2	K2	-	-	-	007-002
4.5	Corner drive gear NR	NR0	<800		006-001	006-012
		NR1	801-1250		006-002	006-013
		NR2	1251-1450		006-003	006-014
		NR3	1451-1650		006-004	006-015
		NR4	1651-2400		006-005	006-016
6.1	Stay	R1	-	290-510	-	009-001
		R2	-	511-760	-	009-002
		R2C	-	761-830	009-011	009-007
		R3	-	831-1000	009-008	009-003
		R4	-	1001-1200	009-009	009-004
		R4A	-	1201-1450	009-010	009-006
6.2	Stay arm Dr S5	S5/1	-	290-510	010-004	
		S5/2	-	511-830	010-005	
		S5/3	-	831-1450	010-006	
7.1	Upper hinge bracket Dr S5	Dr S5	-		015-003	
7.2	Lower hinge bracket Dr S5	Dr S5	-		016-011	
7.3	Lower hinge leaf DR S5	Dr S5/L	-		016-005	
		Dr S5/P	-		016-006	
8.1	Peripheral striker plate	acc.to profile	-		acc. to catalogue page 8/01	
8.2	Lower striker plate	acc.to profile	-		acc. to catalogue page 8/01	
8.3	Sash lift striker plate	acc.to profile	-		acc. to catalogue page 8/19	
8.4	Striker plate R	acc.to profile	-		acc. to catalogue page 8/01	
9.1	Bracket guard	IIIB	-		acc. to catalogue page 9/10	
9.2	Bracket guard	XA	-		acc. to catalogue page 9/10	
9.3	Leaf guard	IXB	-		acc. to catalogue page 9/10	
9.4	Bearing guard	IVA	-		acc. to catalogue page 9/10	
9.5	Stop block	-	-		032-004	
9.6	Tilt restrictor striker plate	-	1201-1600		011-003	
9.7	Tilt restrictor arm	L	1201-1600		011-001	
		P	1201-1600		011-002	
9.8	Latch	acc.to profile	-		acc. to catalogue page 9/17	
9.9	Latch deadbolt	-	-		acc. to catalogue page 9/17	
9.10	Lift with blockade	-	-		032-001	

ASSEMBLING OF HARDWARE DrC

DRIVE GEAR S, SR
WOODEN WINDOWS, TURN VERSION R
LIST OF BASIC SUBASSEMBLIES

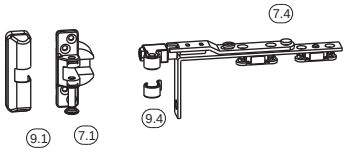

Item	Subassembly	Marking	Scope of use Hw	Scope of use Sw	Catalogue No	
					mushroom deadbolt	cylinder deadbolt
3.1	Drive gear S	S00	<340	-	004-005	004-001
		S01	341-540	-	004-006	004-002
		S02	541-730	-	004-007	004-003
		S03	731-990	-	004-008	004-004
		S1A	991-1250	-	004-013	004-009
		S2	1251-1450	-	004-014	004-010
		S3	1451-1900	-	004-015	004-011
		S4	1901-2400	-	004-016	004-012
3.2	Drive gear SR	SR1A	991-1250	-	004-021	004-017
		SR2	1251-1450	-	004-022	004-018
		SR3	1451-1900	-	004-023	004-019
		SR4	1901-2400	-	004-024	004-020
7.1	Upper hinge bracket DrC	DrC	-		015-002	
7.2	Lower hinge bracket DrC	DrC/L	-		016-001	
		DrC/P	-		016-002	
7.3	Lower hinge leaf DRC	DrC11/L	-		016-003	
		DrC11/P	-		016-004	
7.4	Corner hinge leaf DrC	DrC11	-		017-001	
7.5	Middle hinge leaf DrC	1-1/11	-		1AJ1602UX	
		0-2/11	-		1AJ1601UX	
8.1	Peripheral striker plate	acc. to profile	-		acc. to catalogue page 8/01	
8.2	Lift striker plate	acc. to profile	-		acc. to catalogue page 8/19	
9.1	Bracket guard	VIII	-		acc. to catalogue page 9/09	
9.2	Bracket guard	VIB	-		acc. to catalogue page 9/09	
9.3	Leaf guard	VA	-		acc. to catalogue page 9/09	
9.4	bearing guard	VII	-		acc. to catalogue page 9/09	
9.5	Stop block DrC	-	-		032-003	
9.6	External pressure pad	-	-		acc. to catalogue page 9/01	
9.7	Latch	acc. to profile	-		acc. to catalogue page 9/17	
9.8	Latch deadbolt	-	-		acc. to catalogue page 9/17	
9.9	Lift with blockade	-	-		032-001	

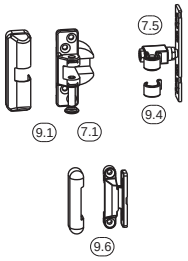

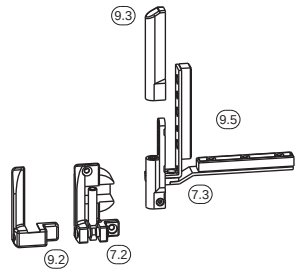

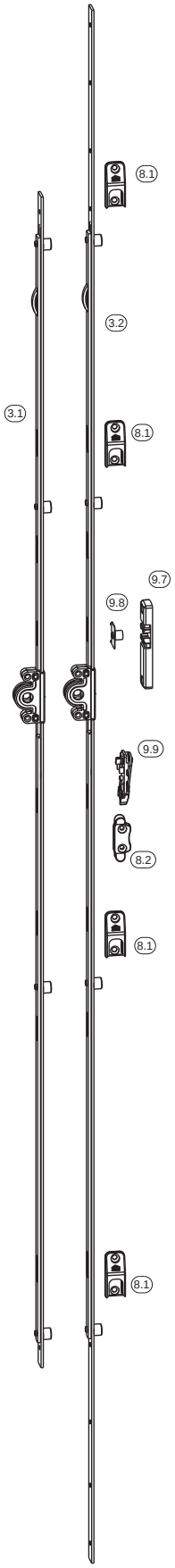

ASSEMBLING OF HARDWARE DrC

DRIVE GEAR ZNR
WOODEN WINDOWS, TURN VERSION R
ASSEMBLING OF HARDWARE ELEMENTS ON THE FRAME

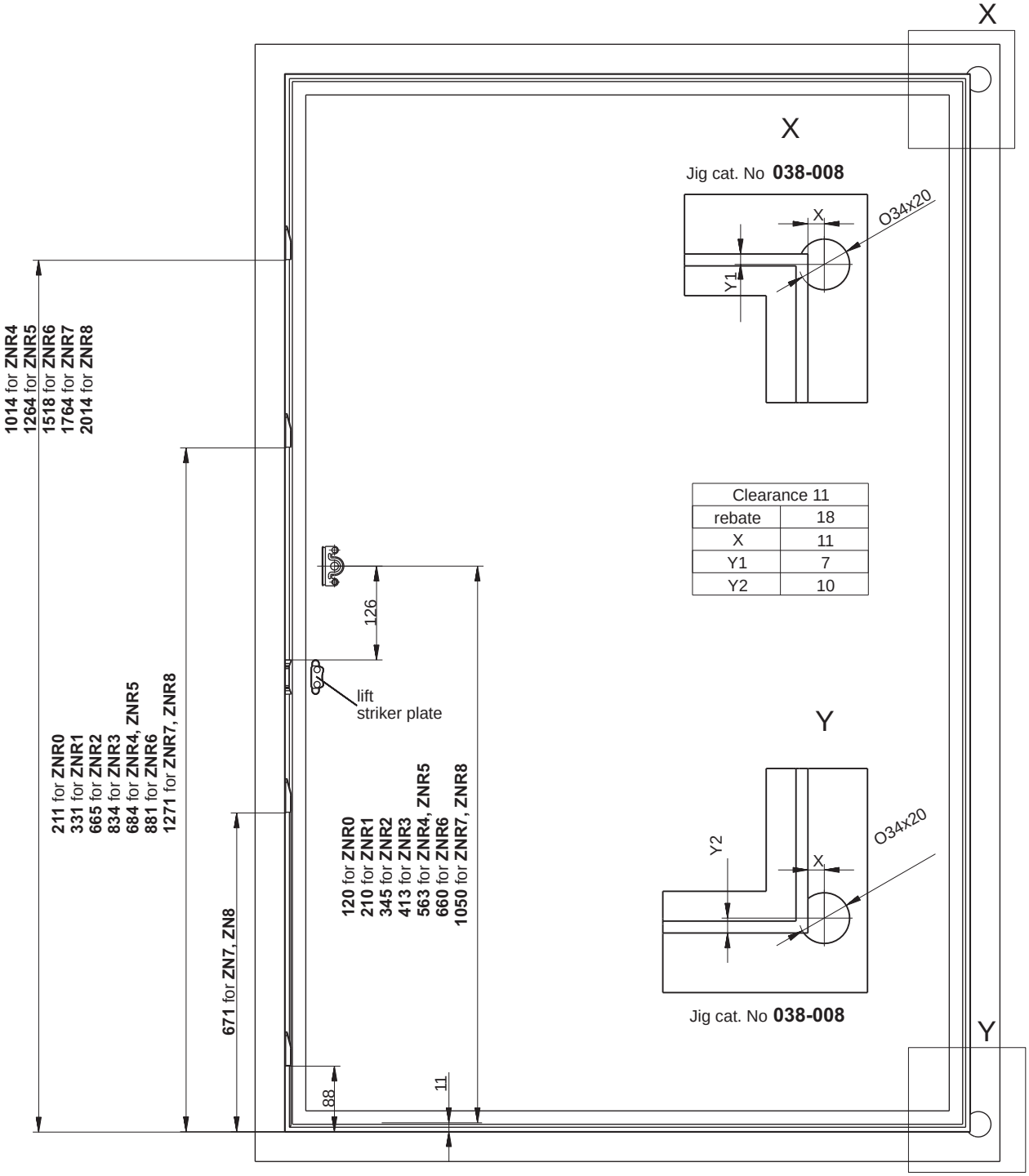

ASSEMBLING OF HARDWARE DrC

DRIVE GEAR ZNR
WOODEN WINDOWS, TURN VERSION R
LIST OF BASIC SUBASSEMBLIES

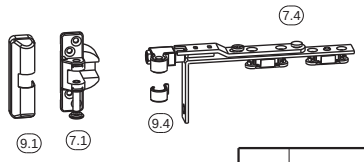

Item	Subassembly	Marking	Scope of use Hw	Scope of use Sw	Catalogue No	
					mushroom deadbolt	cylinder deadbolt
3	Drive gear ZNR	ZNR0	265-540	-	001-068	001-059
		ZNR1	541-720	-	001-069	001-060
		ZNR2	721-900	-	001-070	001-061
		ZNR3	901-1080	-	001-071	001-062
		ZNR4	1081-1330	-	001-072	001-063
		ZNR5	1331-1580	-	001-073	001-064
		ZNR6	1581-1830	-	001-074	001-065
		ZNR7	1831-2080	-	001-075	001-066
		ZNR8	2081-2330	-	001-076	001-067
7.1	Upper hinge bracket DrC	DrC	-		015-002	
7.2	Lower hinge bracket DrC	DrC/L	-		016-001	
		DrC/P	-		016-002	
7.3	Lower hinge leaf DRC	DrC11/L	-		016-003	
		DrC11/P	-		016-004	
7.4	Corner hinge leaf DrC	DrC11	-		017-001	
7.5	Middle hinge leaf DrC	1-1/11	-		1AJ1602UX	
		0-2/11	-		1AJ1601UX	
8.1	Peripheral striker plate	acc. to profile	-		acc. to catalogue page 8/01	
8.2	Lift striker plate	acc. to profile	-		acc. to catalogue page 8/19	
9.1	Bracket guard	VIII	-		acc. to catalogue page 9/09	
9.2	Bracket guard	VIB	-		acc. to catalogue page 9/09	
9.3	Leaf guard	VA	-		acc. to catalogue page 9/09	
9.4	Bearing guard	VII	-		acc. to catalogue page 9/09	
9.5	Stop block DrC	-	-		032-003	
9.6	External pressure pad	-	-		acc. to catalogue page 9/01	
9.7	Latch	acc. to profile	-		acc. to catalogue page 9/17	
9.8	Latch deadbolt	-	-		acc. to catalogue page 9/17	
9.9	Lift with blockade	-	-		032-001	

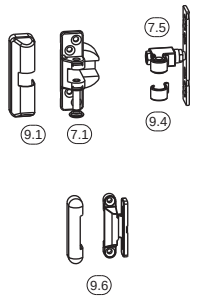

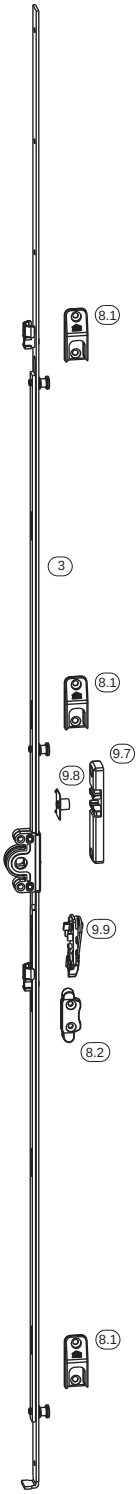

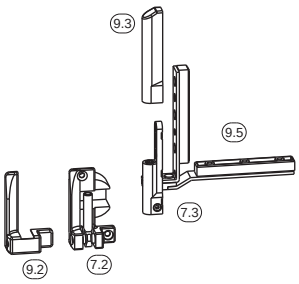

ASSEMBLING OF HARDWARE DrC

DRIVE GEAR ZN
WOODEN WINDOWS, TURN VERSION R
ASSEMBLING OF HARDWARE ELEMENTS ON THE FRAME

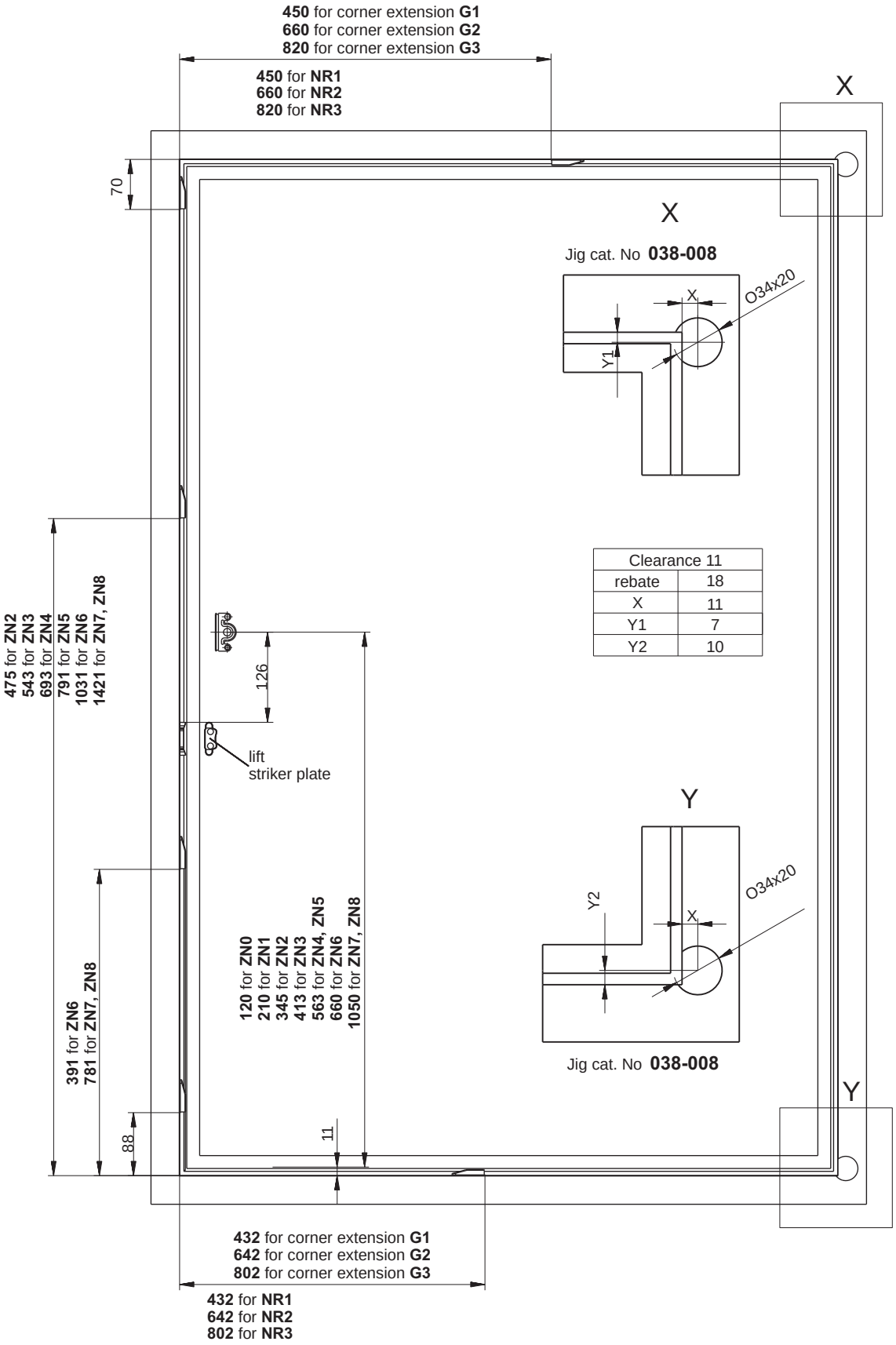

ASSEMBLING OF HARDWARE DrC

DRIVE GEAR ZN
WOODEN WINDOWS, TURN VERSION R
LIST OF BASIC SUBASSEMBLIES

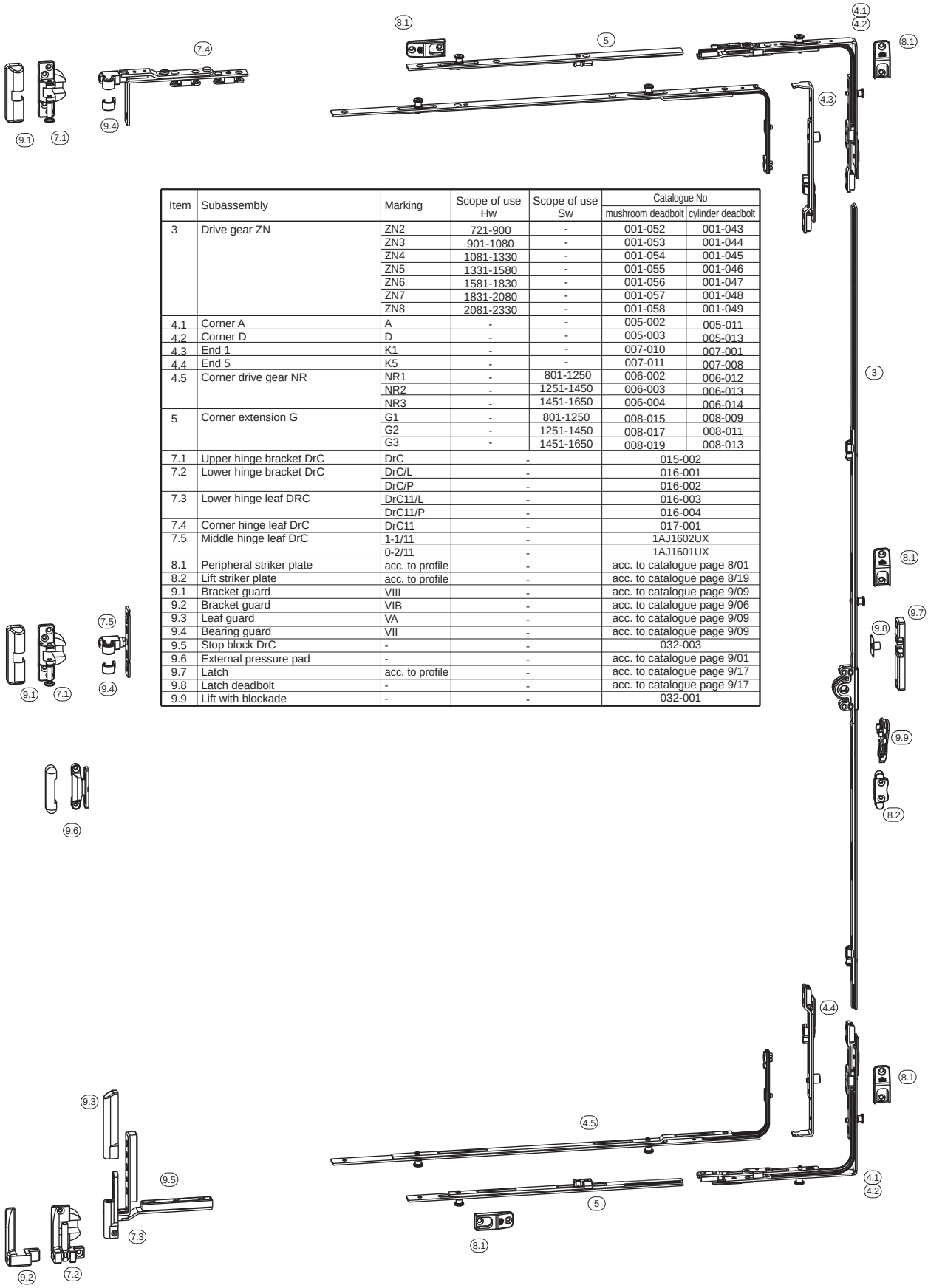

Item	Subassembly	Marking	Scope of use Hw	Scope of use Sw	Catalogue No	
					mushroom deadbolt	cylinder deadbolt
3	Drive gear ZN	ZN2	721-900	-	001-052	001-043
		ZN3	901-1080	-	001-053	001-044
		ZN4	1081-1330	-	001-054	001-045
		ZN5	1331-1580	-	001-055	001-046
		ZN6	1581-1830	-	001-056	001-047
		ZN7	1831-2080	-	001-057	001-048
		ZN8	2081-2330	-	001-058	001-049
4.1	Corner A	A	-	-	005-002	005-011
4.2	Corner D	D	-	-	005-003	005-013
4.3	End 1	K1	-	-	007-010	007-001
4.4	End 5	K5	-	-	007-011	007-008
4.5	Corner drive gear NR	NR1	-	801-1250	006-002	006-012
		NR2	-	1251-1450	006-003	006-013
		NR3	-	1451-1650	006-004	006-014
5	Corner extension G	G1	-	801-1250	008-015	008-009
		G2	-	1251-1450	008-017	008-011
		G3	-	1451-1650	008-019	008-013
7.1	Upper hinge bracket DrC	DrC	-		015-002	
7.2	Lower hinge bracket DrC	DrC/L	-		016-001	
		DrC/P	-		016-002	
7.3	Lower hinge leaf DRC	DrC11/L	-		016-003	
		DrC11/P	-		016-004	
7.4	Corner hinge leaf DrC	DrC11	-		017-001	
7.5	Middle hinge leaf DrC	1-1/11	-		1AJ1602UX	
		0-2/11	-		1AJ1601UX	
8.1	Peripheral striker plate	acc. to profile	-		acc. to catalogue page 8/01	
8.2	Lift striker plate	acc. to profile	-		acc. to catalogue page 8/19	
9.1	Bracket guard	VIII	-		acc. to catalogue page 9/09	
9.2	Bracket guard	VIB	-		acc. to catalogue page 9/06	
9.3	Leaf guard	VA	-		acc. to catalogue page 9/09	
9.4	Bearing guard	VII	-		acc. to catalogue page 9/09	
9.5	Stop block DrC	-	-		032-003	
9.6	External pressure pad	-	-		acc. to catalogue page 9/01	
9.7	Latch	acc. to profile	-		acc. to catalogue page 9/17	
9.8	Latch deadbolt	-	-		acc. to catalogue page 9/17	
9.9	Lift with blockade	-	-		032-001	

ASSEMBLING OF HARDWARE DrC

DRIVE GEAR Z
WOODEN WINDOWS, TURN VERSION R
ASSEMBLING OF HARDWARE ELEMENTS ON THE FRAME

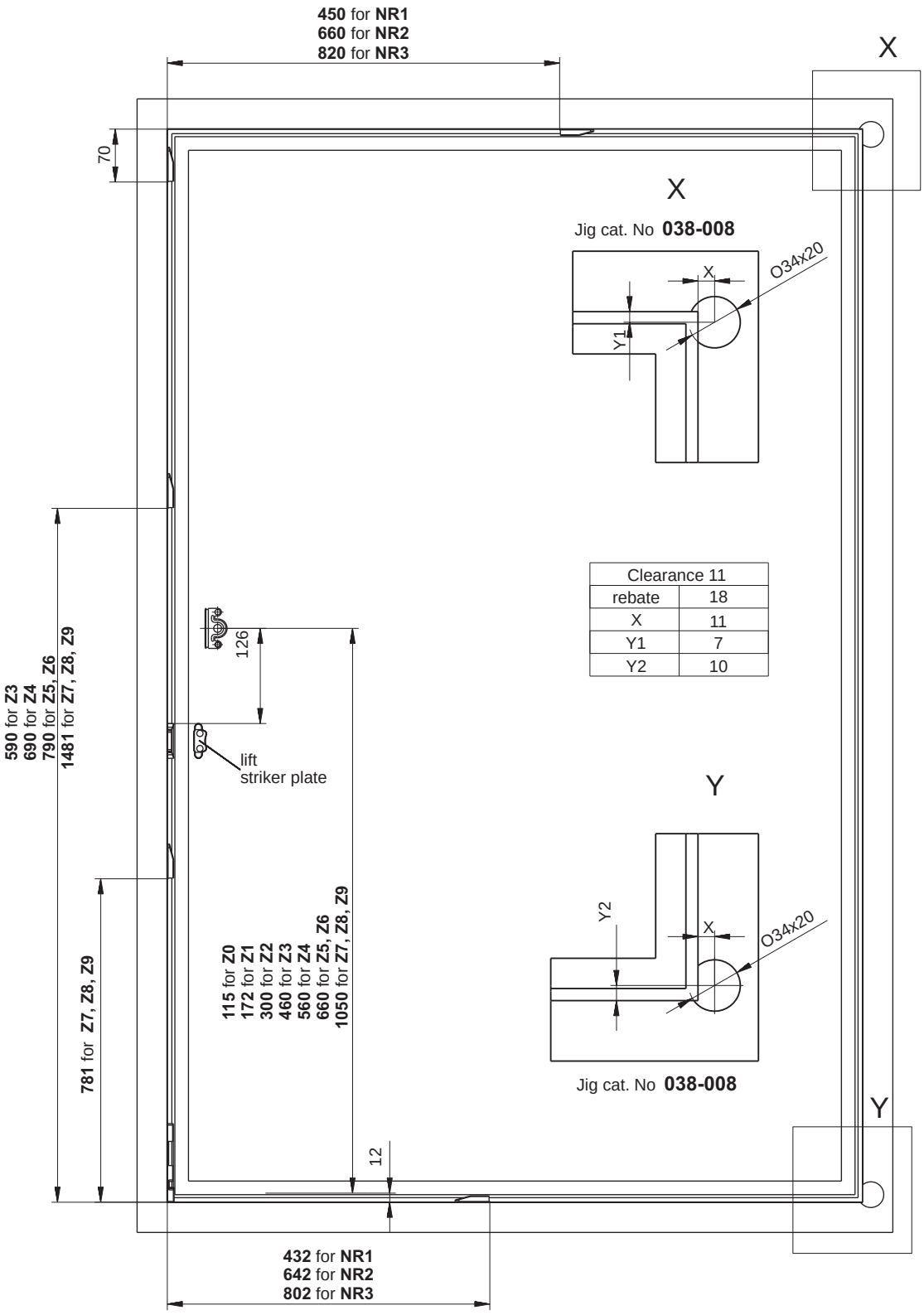

ASSEMBLING OF HARDWARE DrC

DRIVE GEAR Z
WOODEN WINDOWS, TURN VERSION R
LIST OF BASIC SUBASSEMBLIES

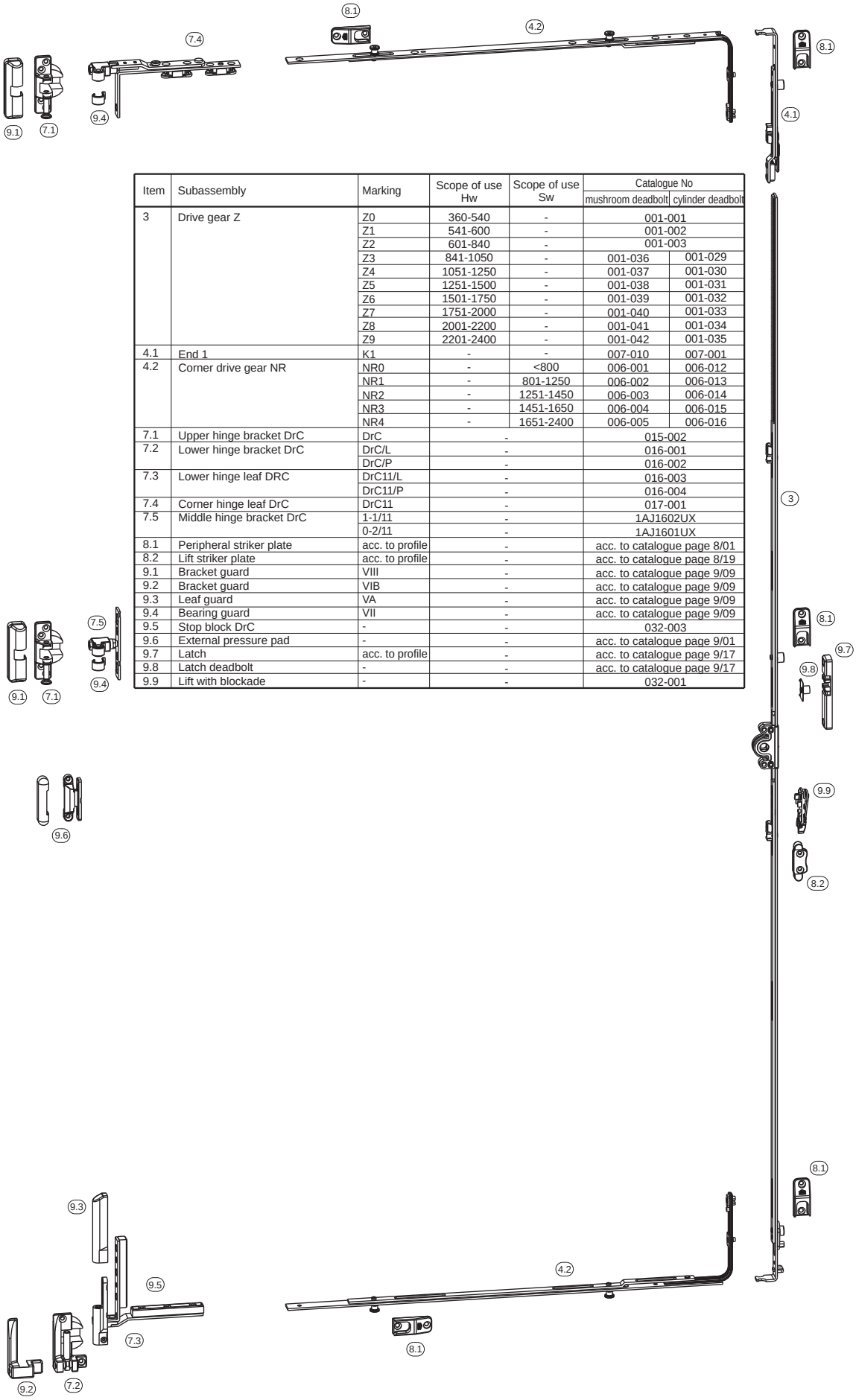

Item	Subassembly	Marking	Scope of use Hw	Scope of use Sw	Catalogue No	
					mushroom deadbolt	cylinder deadbolt
3	Drive gear Z	Z0	360-540	-	001-001	
		Z1	541-600	-	001-002	
		Z2	601-840	-	001-003	
		Z3	841-1050	-	001-036	001-029
		Z4	1051-1250	-	001-037	001-030
		Z5	1251-1500	-	001-038	001-031
		Z6	1501-1750	-	001-039	001-032
		Z7	1751-2000	-	001-040	001-033
		Z8	2001-2200	-	001-041	001-034
		Z9	2201-2400	-	001-042	001-035
4.1	End 1	K1	-	-	007-010	007-001
4.2	Corner drive gear NR	NR0	-	<800	006-001	006-012
		NR1	-	801-1250	006-002	006-013
		NR2	-	1251-1450	006-003	006-014
		NR3	-	1451-1650	006-004	006-015
		NR4	-	1651-2400	006-005	006-016
7.1	Upper hinge bracket DrC	DrC	-		015-002	
7.2	Lower hinge bracket DrC	DrC/L	-		016-001	
		DrC/P	-		016-002	
7.3	Lower hinge leaf DRC	DrC11/L	-		016-003	
		DrC11/P	-		016-004	
7.4	Corner hinge leaf DrC	DrC11	-		017-001	
7.5	Middle hinge bracket DrC	1-1/11	-		1AJ1602UX	
		0-2/11	-		1AJ1601UX	
8.1	Peripheral striker plate	acc. to profile	-		acc. to catalogue page 8/01	
8.2	Lift striker plate	acc. to profile	-		acc. to catalogue page 8/19	
9.1	Bracket guard	VIII	-		acc. to catalogue page 9/09	
9.2	Bracket guard	VIB	-		acc. to catalogue page 9/09	
9.3	Leaf guard	VA	-		acc. to catalogue page 9/09	
9.4	Bearing guard	VII	-		acc. to catalogue page 9/09	
9.5	Stop block DrC	-	-		032-003	
9.6	External pressure pad	-	-		acc. to catalogue page 9/01	
9.7	Latch	acc. to profile	-		acc. to catalogue page 9/17	
9.8	Latch deadbolt	-	-		acc. to catalogue page 9/17	
9.9	Lift with blockade	-	-		032-001	

ASSEMBLING OF HARDWARE DrC

DRIVE GEAR ZN BZ

WOODEN WINDOWS, VERSION FOR DOUBLE WINDOWS W/O POST RU-R

ASSEMBLING OF HARDWARE ELEMENTS ON THE FRAME

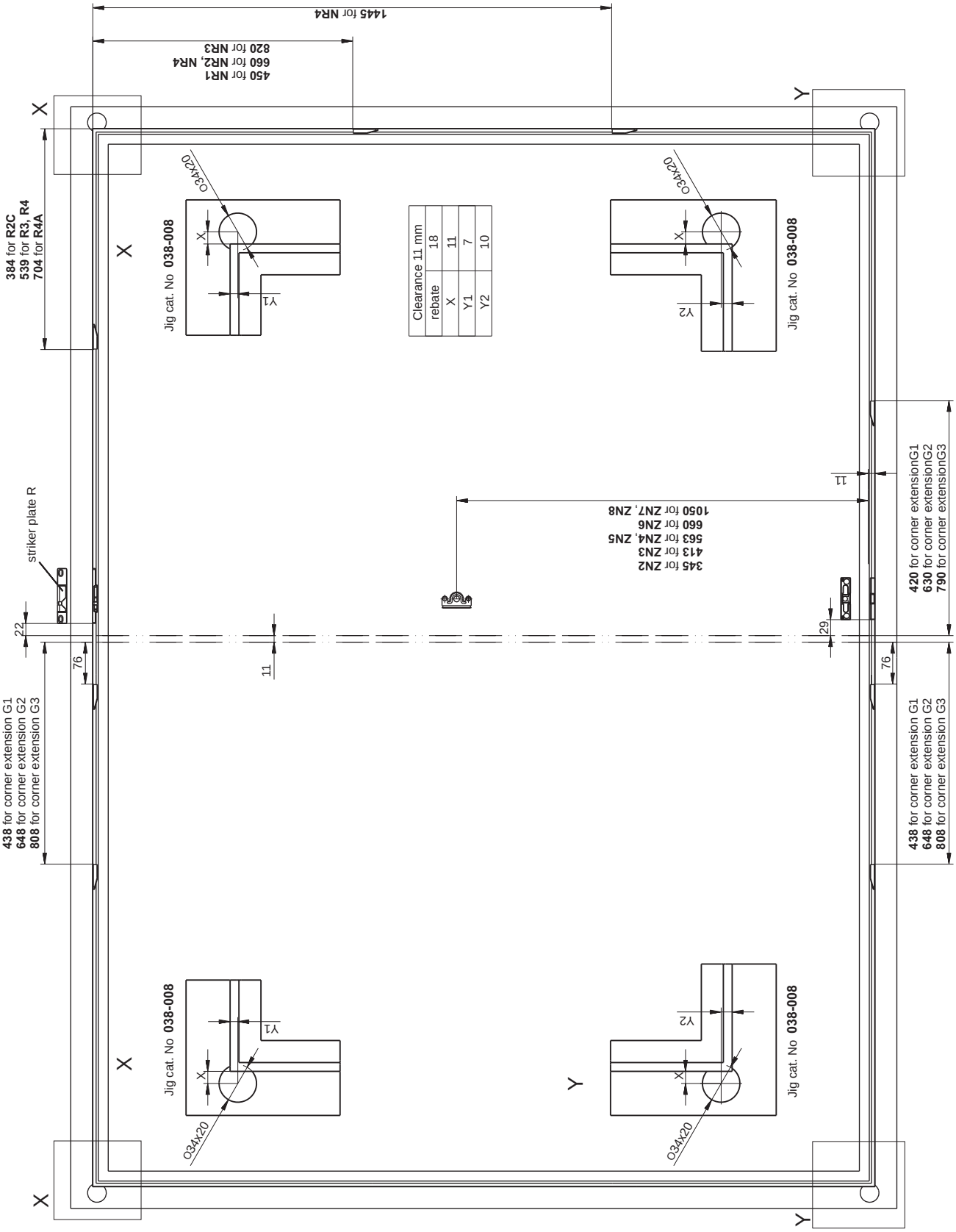

KARO

KRAJOWE AKCESORIA I ROZWIĄZANIA OKUCIOWE

ROMB SYSTEM

ASSEMBLING OF HARDWARE DrC

DRIVE GEAR ZN BZ

WOODEN WINDOWS, VERSION FOR DOUBLE WINDOWS W/O POST RU-R

LIST OF BASIC SUBASSEMBLIES

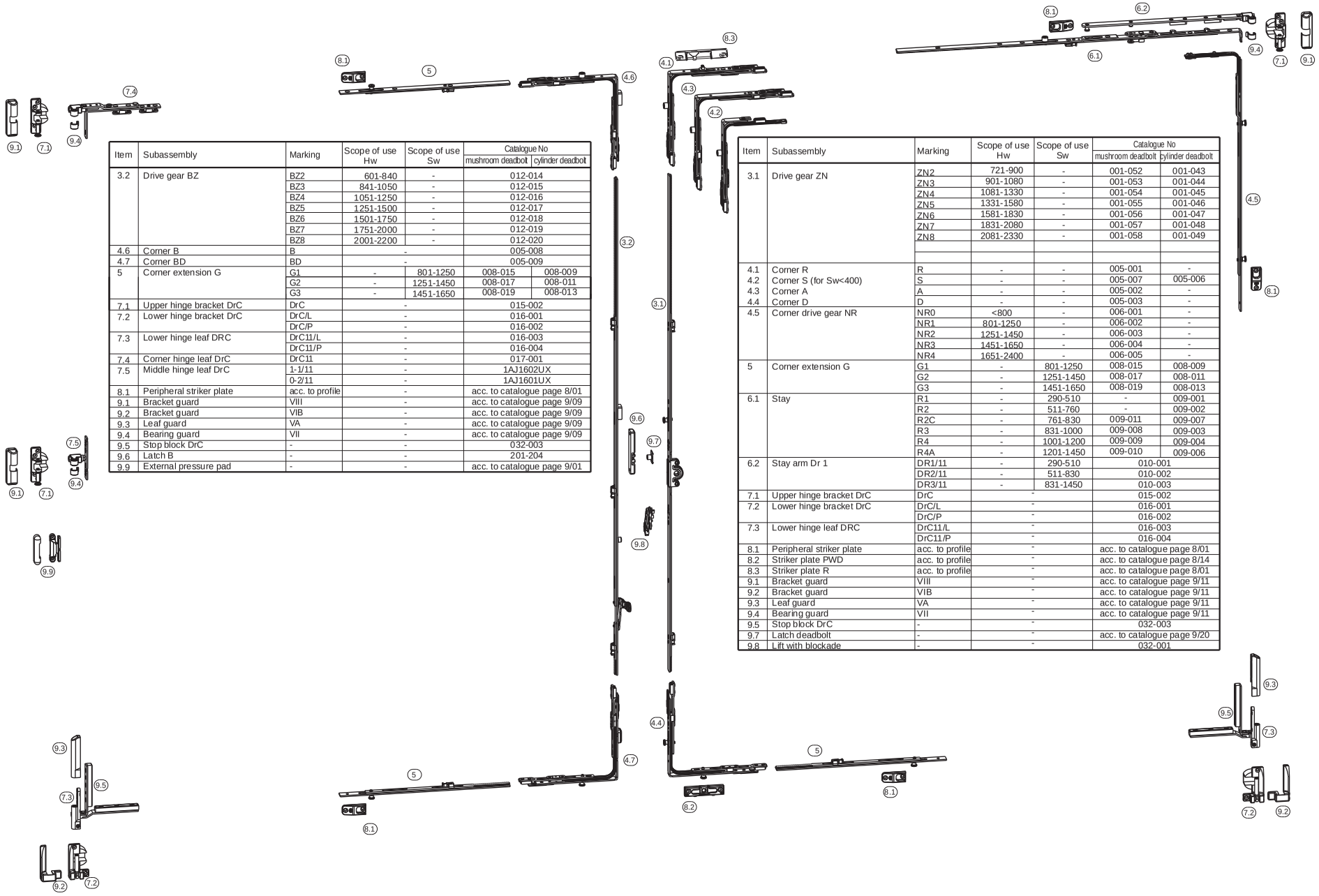

Item	Subassembly	Marking	Scope of use Hw	Scope of use Sw	Catalogue No	
					mushroom deadbolt	cylinder deadbolt
3.2	Drive gear BZ	BZ2	601-840	-	012-014	
		BZ3	841-1050	-	012-015	
		BZ4	1051-1250	-	012-016	
		BZ5	1251-1500	-	012-017	
		BZ6	1501-1750	-	012-018	
		BZ7	1751-2000	-	012-019	
		BZ8	2001-2200	-	012-020	
4.6	Corner B	B	-		005-008	
4.7	Corner BD	BD	-		005-009	
5	Corner extension G	G1	-	801-1250	008-015	008-009
		G2	-	1251-1450	008-017	008-011
		G3	-	1451-1650	008-019	008-013
7.1	Upper hinge bracket DrC	DrC	-		015-002	
7.2	Lower hinge bracket DrC	DrC/L	-		016-001	
		DrC/P	-		016-002	
7.3	Lower hinge leaf DRC	DrC11/L	-		016-003	
		DrC11/P	-		016-004	
7.4	Corner hinge leaf DrC	DrC11	-		017-001	
7.5	Middle hinge leaf DrC	1-1/11	-		1AJ1602UX	
		0-2/11	-		1AJ1601UX	
8.1	Peripheral striker plate	acc. to profile	-		acc. to catalogue page 8/01	
9.1	Bracket guard	VIII	-		acc. to catalogue page 9/09	
9.2	Bracket guard	VIB	-		acc. to catalogue page 9/09	
9.3	Leaf guard	VA	-		acc. to catalogue page 9/09	
9.4	Bearing guard	VII	-		acc. to catalogue page 9/09	
9.5	Stop block DrC	-	-		032-003	
9.6	Latch B	-	-		201-204	
9.9	External pressure pad	-	-		acc. to catalogue page 9/01	

Item	Subassembly	Marking	Scope of use Hw	Scope of use Sw	Catalogue No	
					mushroom deadbolt	cylinder deadbolt
3.1	Drive gear ZN	ZN2	721-900	-	001-052	001-043
		ZN3	901-1080	-	001-053	001-044
		ZN4	1081-1330	-	001-054	001-045
		ZN5	1331-1580	-	001-055	001-046
		ZN6	1581-1830	-	001-056	001-047
		ZN7	1831-2080	-	001-057	001-048
		ZN8	2081-2330	-	001-058	001-049
4.1	Corner R	R	-	-	005-001	-
4.2	Corner S (for Sw<400)	S	-	-	005-007	005-006
4.3	Corner A	A	-	-	005-002	-
4.4	Corner D	D	-	-	005-003	-
4.5	Corner drive gear NR	NR0	<800	-	006-001	-
		NR1	801-1250	-	006-002	-
		NR2	1251-1450	-	006-003	-
		NR3	1451-1650	-	006-004	-
		NR4	1651-2400	-	006-005	-
5	Corner extension G	G1	-	801-1250	008-015	008-009
		G2	-	1251-1450	008-017	008-011
		G3	-	1451-1650	008-019	008-013
6.1	Stay	R1	-	290-510	-	009-001
		R2	-	511-760	-	009-002
		R2C	-	761-830	009-011	009-007
		R3	-	831-1000	009-008	009-003
		R4	-	1001-1200	009-009	009-004
		R4A	-	1201-1450	009-010	009-006
6.2	Stay arm Dr 1	DR1/11	-	290-510	010-001	
		DR2/11	-	511-830	010-002	
		DR3/11	-	831-1450	010-003	
7.1	Upper hinge bracket DrC	DrC	-		015-002	
7.2	Lower hinge bracket DrC	DrC/L	-		016-001	
		DrC/P	-		016-002	
7.3	Lower hinge leaf DRC	DrC11/L	-		016-003	
		DrC11/P	-		016-004	
8.1	Peripheral striker plate	acc. to profile	-		acc. to catalogue page 8/01	
8.2	Striker plate PWD	acc. to profile	-		acc. to catalogue page 8/14	
8.3	Striker plate R	acc. to profile	-		acc. to catalogue page 8/01	
9.1	Bracket guard	VIII	-		acc. to catalogue page 9/11	
9.2	Bracket guard	VIB	-		acc. to catalogue page 9/11	
9.3	Leaf guard	VA	-		acc. to catalogue page 9/11	
9.4	Bearing guard	VII	-		acc. to catalogue page 9/11	
9.5	Stop block DrC	-	-		032-003	
9.7	Latch deadbolt	-	-		acc. to catalogue page 9/20	
9.8	Lift with blockade	-	-		032-001	

ASSEMBLING OF HARDWARE DrC

DRIVE GEAR Z B

WOODEN WINDOWS, VERSION FOR DOUBLE WINDOWS W/O POST RU-R

ASSEMBLING OF HARDWARE ELEMENTS ON THE FRAME

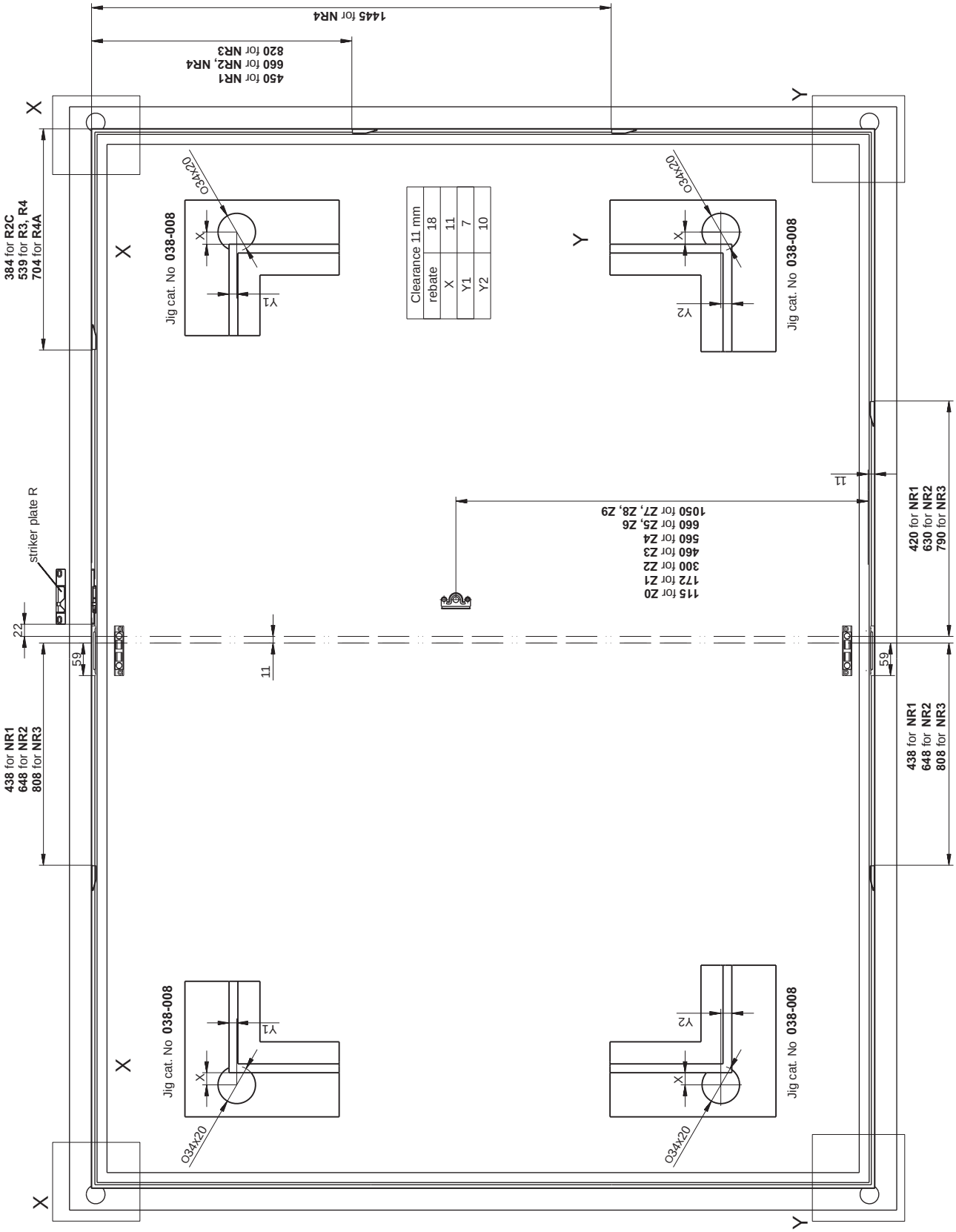

KARO

KRAJOWE AKCESORIA I ROZWIĄZANIA OKUCIOWE

ROMB SYSTEM

ASSEMBLING OF HARDWARE DrC

DRIVE GEAR Z B

WOODEN WINDOWS, VERSION FOR DOUBLE WINDOWS W/O POST RU-R

LIST OF BASIC SUBASSEMBLIES

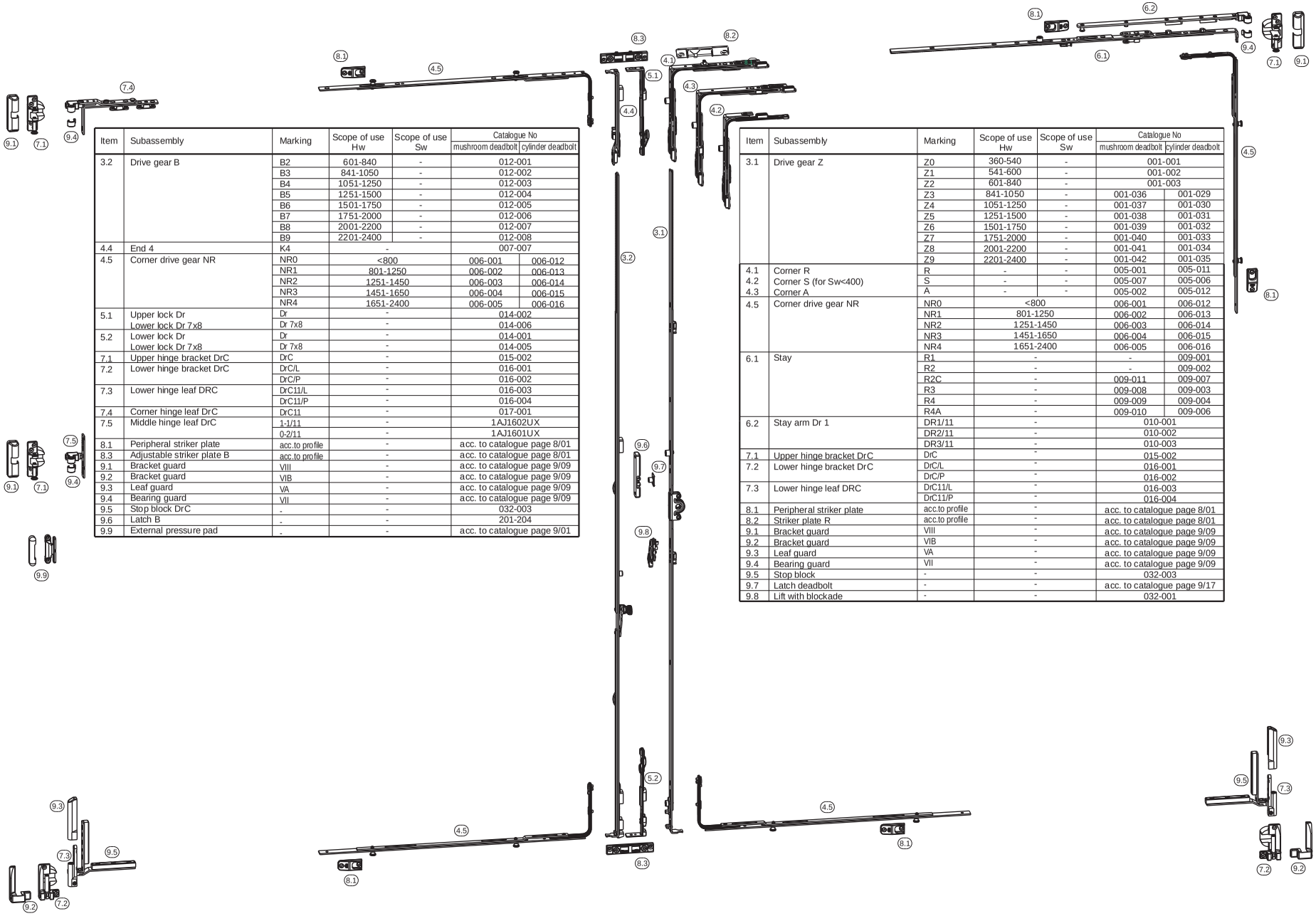

Item	Subassembly	Marking	Scope of use Hw	Scope of use Sw	Catalogue No mushroom deadbolt	Catalogue No cylinder deadbolt
3.2	Drive gear B	B2	601-840	-	012-001	
		B3	841-1050	-	012-002	
		B4	1051-1250	-	012-003	
		B5	1251-1500	-	012-004	
		B6	1501-1750	-	012-005	
		B7	1751-2000	-	012-006	
		B8	2001-2200	-	012-007	
		B9	2201-2400	-	012-008	
4.4	End 4	K4	-		007-007	
4.5	Corner drive gear NR	NR0	<800		006-001	006-012
		NR1	801-1250		006-002	006-013
		NR2	1251-1450		006-003	006-014
		NR3	1451-1650		006-004	006-015
		NR4	1651-2400		006-005	006-016
5.1	Upper lock Dr	Dr	-		014-002	
	Lower lock Dr 7x8	Dr 7x8	-		014-006	
5.2	Lower lock Dr	Dr	-		014-001	
	Lower lock Dr 7x8	Dr 7x8	-		014-005	
7.1	Upper hinge bracket DrC	DrC	-		015-002	
7.2	Lower hinge bracket DrC	DrC/L	-		016-001	
		DrC/P	-		016-002	
7.3	Lower hinge leaf DRC	DrC11/L	-		016-003	
		DrC11/P	-		016-004	
7.4	Corner hinge leaf DrC	DrC11	-		017-001	
7.5	Middle hinge leaf DrC	1-1/11	-		1AJ1602UX	
		0-2/11	-		1AJ1601UX	
8.1	Peripheral striker plate	acc.to profile	-		acc. to catalogue page 8/01	
8.3	Adjustable striker plate B	acc.to profile	-		acc. to catalogue page 8/01	
9.1	Bracket guard	VIII	-		acc. to catalogue page 9/09	
9.2	Bracket guard	VIB	-		acc. to catalogue page 9/09	
9.3	Leaf guard	VA	-		acc. to catalogue page 9/09	
9.4	Bearing guard	VII	-		acc. to catalogue page 9/09	
9.5	Stop block DrC	-	-		032-003	
9.6	Latch B	-	-		201-204	
9.9	External pressure pad	-	-		acc. to catalogue page 9/01	

Item	Subassembly	Marking	Scope of use Hw	Scope of use Sw	Catalogue No mushroom deadbolt	Catalogue No cylinder deadbolt
3.1	Drive gear Z	Z0	360-540	-	001-001	
		Z1	541-600	-	001-002	
		Z2	601-840	-	001-003	
		Z3	841-1050	-	001-036	001-029
		Z4	1051-1250	-	001-037	001-030
		Z5	1251-1500	-	001-038	001-031
		Z6	1501-1750	-	001-039	001-032
		Z7	1751-2000	-	001-040	001-033
		Z8	2001-2200	-	001-041	001-034
		Z9	2201-2400	-	001-042	001-035
4.1	Corner R	R	-	-	005-001	005-011
4.2	Corner S (for Sw<400)	S	-	-	005-007	005-006
4.3	Corner A	A	-	-	005-002	005-012
4.5	Corner drive gear NR	NR0	<800		006-001	006-012
		NR1	801-1250		006-002	006-013
		NR2	1251-1450		006-003	006-014
		NR3	1451-1650		006-004	006-015
		NR4	1651-2400		006-005	006-016
6.1	Stay	R1	-		-	009-001
		R2	-		-	009-002
		R2C	-		009-011	009-007
		R3	-		009-008	009-003
		R4	-		009-009	009-004
		R4A	-		009-010	009-006
6.2	Stay arm Dr 1	DR1/11	-		010-001	
		DR2/11	-		010-002	
		DR3/11	-		010-003	
7.1	Upper hinge bracket DrC	DrC	-		015-002	
7.2	Lower hinge bracket DrC	DrC/L	-		016-001	
		DrC/P	-		016-002	
7.3	Lower hinge leaf DRC	DrC11/L	-		016-003	
		DrC11/P	-		016-004	
8.1	Peripheral striker plate	acc.to profile	-		acc. to catalogue page 8/01	
8.2	Striker plate R	acc.to profile	-		acc. to catalogue page 8/01	
9.1	Bracket guard	VIII	-		acc. to catalogue page 9/09	
9.2	Bracket guard	VIB	-		acc. to catalogue page 9/09	
9.3	Leaf guard	VA	-		acc. to catalogue page 9/09	
9.4	Bearing guard	VII	-		acc. to catalogue page 9/09	
9.5	Stop block	-	-		032-003	
9.7	Latch deadbolt	-	-		acc. to catalogue page 9/17	
9.8	Lift with blockade	-	-		032-001	

ASSEMBLING OF HARDWARE DrC

DRIVE GEAR ZN STRIKER PLATE PWD
WOODEN WINDOWS, TURN / TILT VERSION RU
ASSEMBLING OF HARDWARE ELEMENTS IN THE FRAME

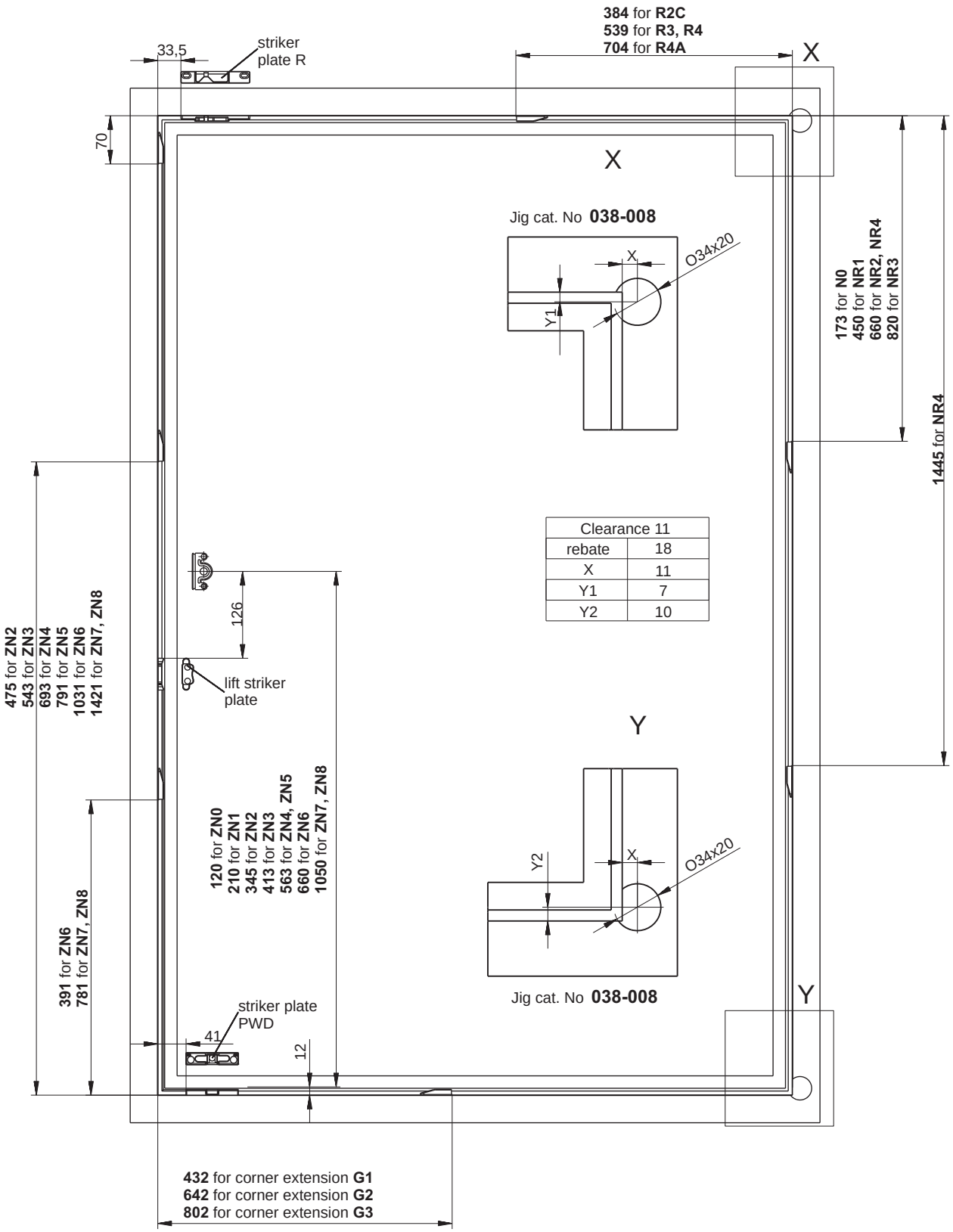

ASSEMBLING OF HARDWARE DrC

DRIVE GEAR ZN
WOODEN WINDOWS, TURN / TILT VERSION RU
LIST OF BASIC SUBASSEMBLIES

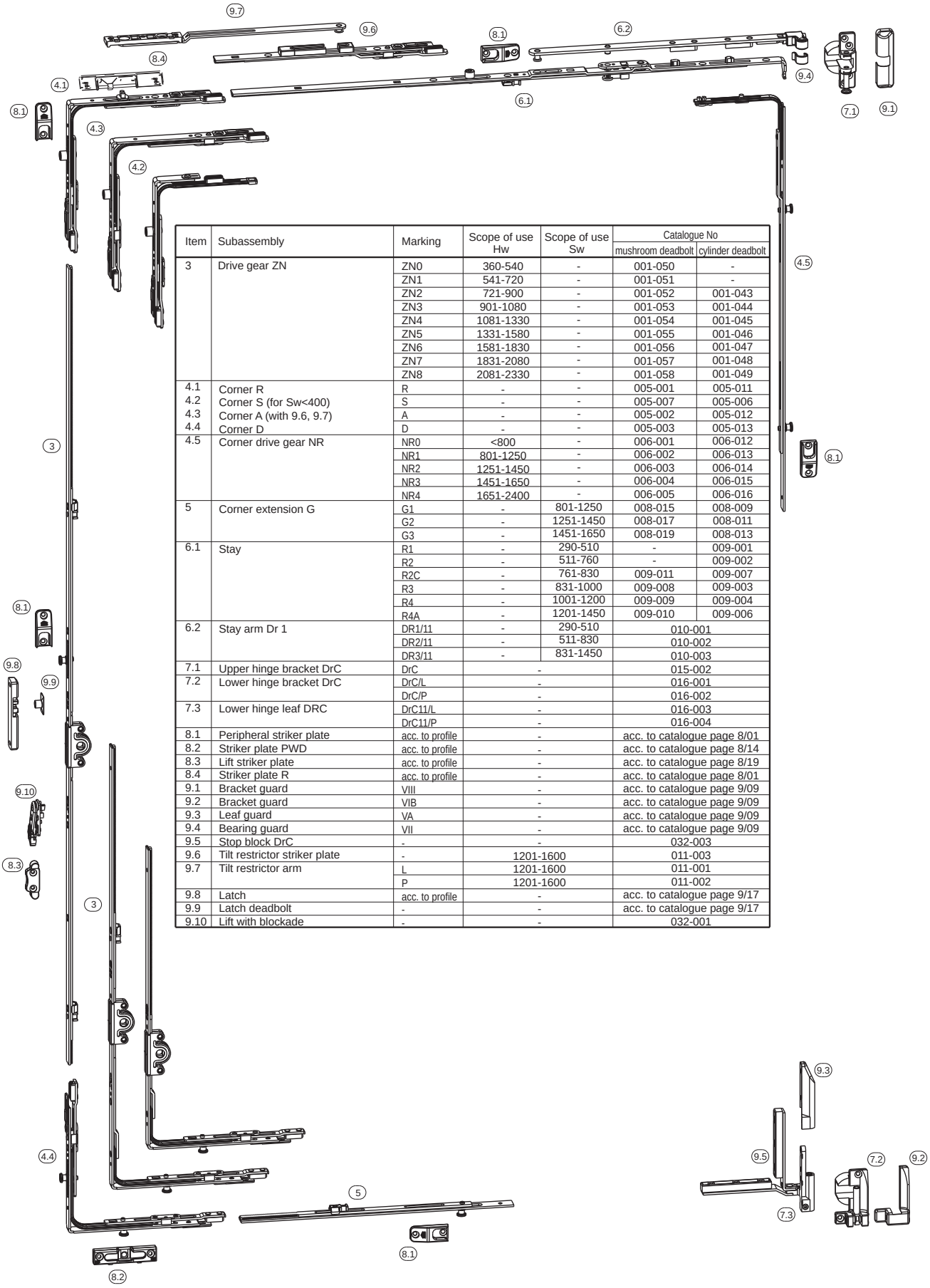

Item	Subassembly	Marking	Scope of use Hw	Scope of use Sw	Catalogue No mushroom deadbolt	Catalogue No cylinder deadbolt
3	Drive gear ZN	ZN0	360-540	-	001-050	-
		ZN1	541-720	-	001-051	-
		ZN2	721-900	-	001-052	001-043
		ZN3	901-1080	-	001-053	001-044
		ZN4	1081-1330	-	001-054	001-045
		ZN5	1331-1580	-	001-055	001-046
		ZN6	1581-1830	-	001-056	001-047
		ZN7	1831-2080	-	001-057	001-048
		ZN8	2081-2330	-	001-058	001-049
4.1	Corner R	R	-	-	005-001	005-011
4.2	Corner S (for Sw<400)	S	-	-	005-007	005-006
4.3	Corner A (with 9.6, 9.7)	A	-	-	005-002	005-012
4.4	Corner D	D	-	-	005-003	005-013
4.5	Corner drive gear NR	NR0	<800	-	006-001	006-012
		NR1	801-1250	-	006-002	006-013
		NR2	1251-1450	-	006-003	006-014
		NR3	1451-1650	-	006-004	006-015
		NR4	1651-2400	-	006-005	006-016
5	Corner extension G	G1	-	801-1250	008-015	008-009
		G2	-	1251-1450	008-017	008-011
		G3	-	1451-1650	008-019	008-013
6.1	Stay	R1	-	290-510	-	009-001
		R2	-	511-760	-	009-002
		R2C	-	761-830	009-011	009-007
		R3	-	831-1000	009-008	009-003
		R4	-	1001-1200	009-009	009-004
		R4A	-	1201-1450	009-010	009-006
6.2	Stay arm Dr 1	DR1/11	-	290-510	010-001	
		DR2/11	-	511-830	010-002	
		DR3/11	-	831-1450	010-003	
7.1	Upper hinge bracket DrC	DrC	-		015-002	
7.2	Lower hinge bracket DrC	DrC/L	-		016-001	
		DrC/P	-		016-002	
7.3	Lower hinge leaf DRC	DrC11/L	-		016-003	
		DrC11/P	-		016-004	
8.1	Peripheral striker plate	acc. to profile	-		acc. to catalogue page 8/01	
8.2	Striker plate PWD	acc. to profile	-		acc. to catalogue page 8/14	
8.3	Lift striker plate	acc. to profile	-		acc. to catalogue page 8/19	
8.4	Striker plate R	acc. to profile	-		acc. to catalogue page 8/01	
9.1	Bracket guard	VIII	-		acc. to catalogue page 9/09	
9.2	Bracket guard	VIB	-		acc. to catalogue page 9/09	
9.3	Leaf guard	VA	-		acc. to catalogue page 9/09	
9.4	Bearing guard	VII	-		acc. to catalogue page 9/09	
9.5	Stop block DrC	-	-		032-003	
9.6	Tilt restrictor striker plate	-	1201-1600		011-003	
9.7	Tilt restrictor arm	L	1201-1600		011-001	
		P	1201-1600		011-002	
9.8	Latch	acc. to profile	-		acc. to catalogue page 9/17	
9.9	Latch deadbolt	-	-		acc. to catalogue page 9/17	
9.10	Lift with blockade	-	-		032-001	

ASSEMBLING OF HARDWARE DrC

DRIVE GEAR Z ZN
WOODEN WINDOWS, TURN / TILT VERSION RU
ASSEMBLING OF HARDWARE ELEMENTS IN THE FRAME

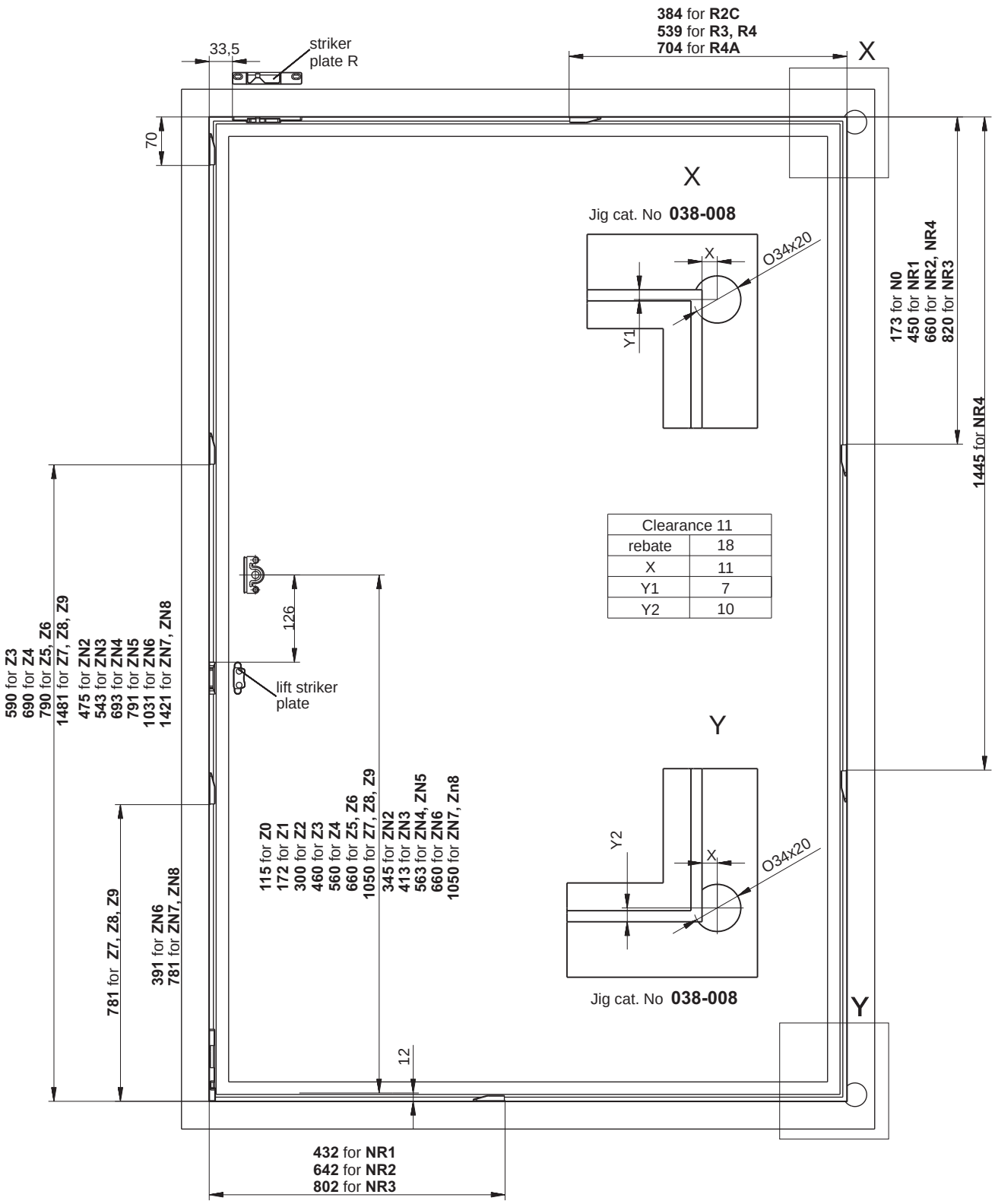

ASSEMBLING OF HARDWARE DrC

DRIVE GEAR Z ZN
WOODEN WINDOWS, TURN / TILT VERSION RU
LIST OF BASIC SUBASSEMBLIES

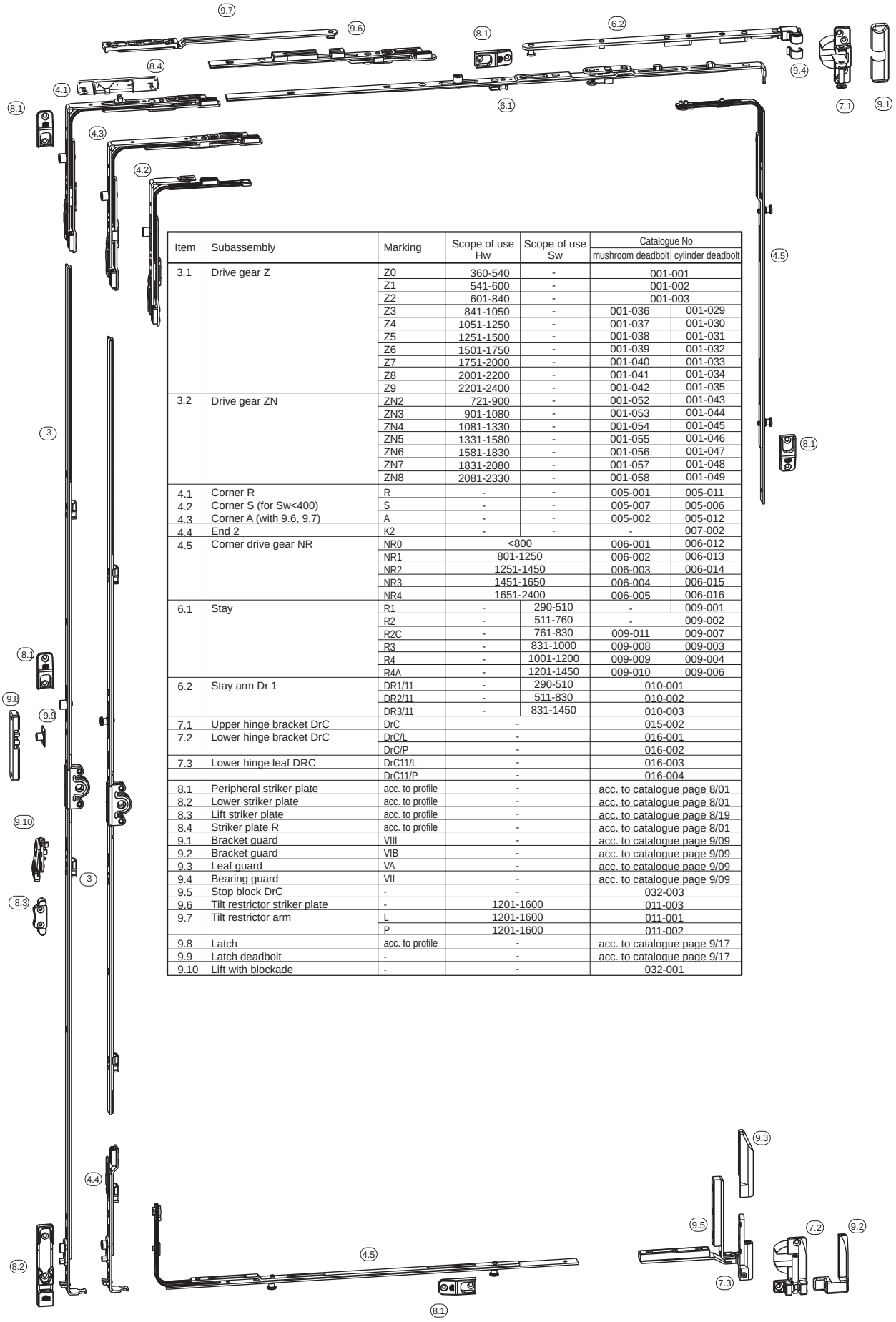

Item	Subassembly	Marking	Scope of use Hw	Scope of use Sw	Catalogue No mushroom deadbolt	Catalogue No cylinder deadbolt
3.1	Drive gear Z	Z0	360-540	-	001-001	
		Z1	541-600	-	001-002	
		Z2	601-840	-	001-003	
		Z3	841-1050	-	001-036	001-029
		Z4	1051-1250	-	001-037	001-030
		Z5	1251-1500	-	001-038	001-031
		Z6	1501-1750	-	001-039	001-032
		Z7	1751-2000	-	001-040	001-033
		Z8	2001-2200	-	001-041	001-034
		Z9	2201-2400	-	001-042	001-035
3.2	Drive gear ZN	ZN2	721-900	-	001-052	001-043
		ZN3	901-1080	-	001-053	001-044
		ZN4	1081-1330	-	001-054	001-045
		ZN5	1331-1580	-	001-055	001-046
		ZN6	1581-1830	-	001-056	001-047
		ZN7	1831-2080	-	001-057	001-048
		ZN8	2081-2330	-	001-058	001-049
4.1	Corner R	R	-	-	005-001	005-011
4.2	Corner S (for Sw<400)	S	-	-	005-007	005-006
4.3	Corner A (with 9.6, 9.7)	A	-	-	005-002	005-012
4.4	End 2	K2	-	-	-	007-002
4.5	Corner drive gear NR	NR0	<800		006-001	006-012
		NR1	801-1250		006-002	006-013
		NR2	1251-1450		006-003	006-014
		NR3	1451-1650		006-004	006-015
		NR4	1651-2400		006-005	006-016
6.1	Stay	R1	-	290-510	-	009-001
		R2	-	511-760	-	009-002
		R2C	-	761-830	009-011	009-007
		R3	-	831-1000	009-008	009-003
		R4	-	1001-1200	009-009	009-004
		R4A	-	1201-1450	009-010	009-006
6.2	Stay arm Dr 1	DR1/11	-	290-510	010-001	
		DR2/11	-	511-830	010-002	
		DR3/11	-	831-1450	010-003	
7.1	Upper hinge bracket DrC	DrC	-		015-002	
7.2	Lower hinge bracket DrC	DrC/L	-		016-001	
		DrC/P	-		016-002	
7.3	Lower hinge leaf DRC	DrC11/L	-		016-003	
		DrC11/P	-		016-004	
8.1	Peripheral striker plate	acc. to profile	-		acc. to catalogue page 8/01	
8.2	Lower striker plate	acc. to profile	-		acc. to catalogue page 8/01	
8.3	Lift striker plate	acc. to profile	-		acc. to catalogue page 8/19	
8.4	Striker plate R	acc. to profile	-		acc. to catalogue page 8/01	
9.1	Bracket guard	VIII	-		acc. to catalogue page 9/09	
9.2	Bracket guard	VIB	-		acc. to catalogue page 9/09	
9.3	Leaf guard	VA	-		acc. to catalogue page 9/09	
9.4	Bearing guard	VII	-		acc. to catalogue page 9/09	
9.5	Stop block DrC	-	-		032-003	
9.6	Tilt restrictor striker plate	-	1201-1600		011-003	
9.7	Tilt restrictor arm	L	1201-1600		011-001	
		P	1201-1600		011-002	
9.8	Latch	acc. to profile	-		acc. to catalogue page 9/17	
9.9	Latch deadbolt	-	-		acc. to catalogue page 9/17	
9.10	Lift with blockade	-	-		032-001	

ASSEMBLING OF HARDWARE S5

DRIVE GEAR S SR
WOODEN WINDOW, VERSION FOR TURN WINDOWS R
ASSEMBLING OF HARDWARE ELEMENTS IN THE FRAME

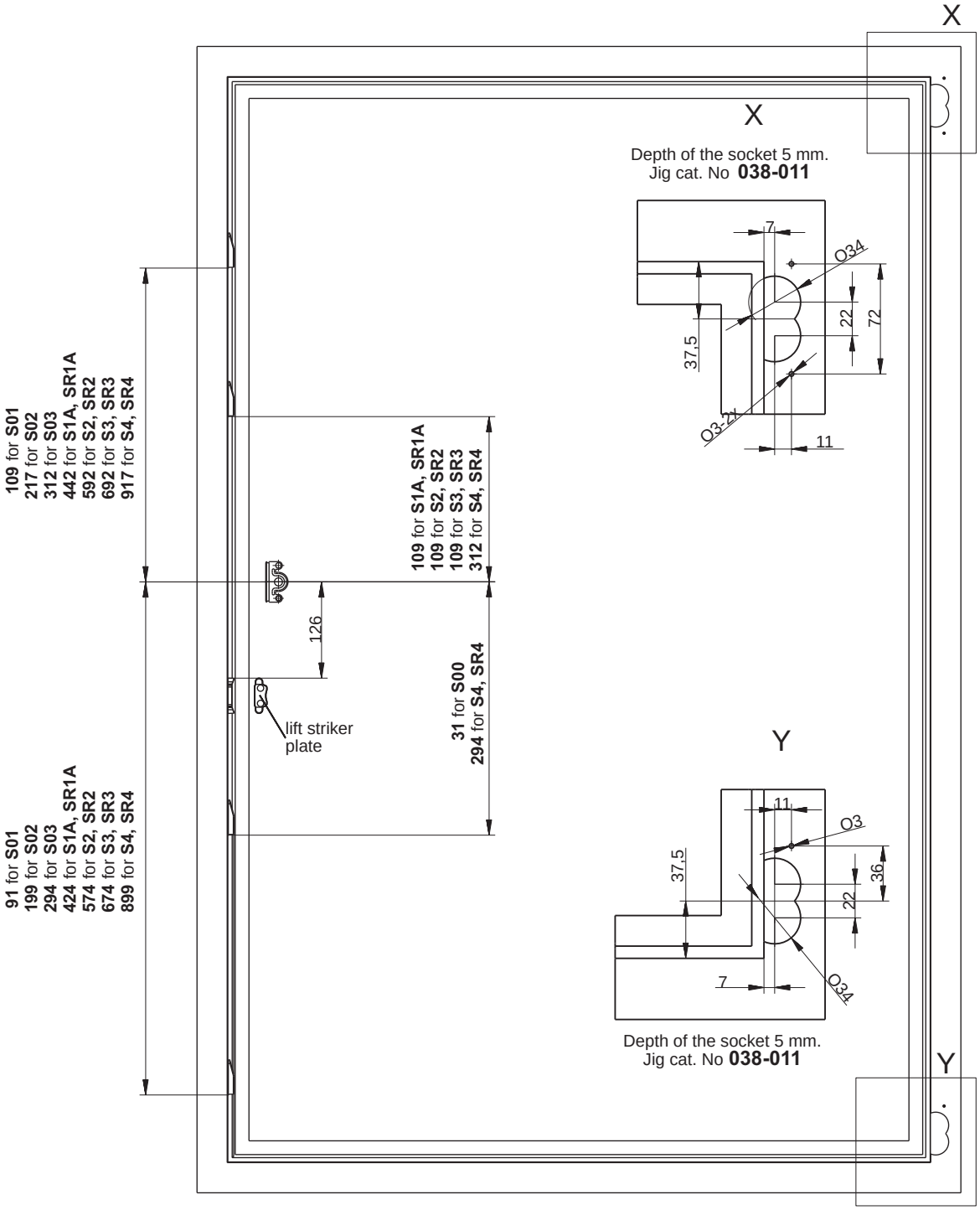

ASSEMBLING OF HARDWARE S5

DRIVE GEAR S SR
WOODEN WINDOWS, TURN VERSION R
LIST OF BASIC SUBASSEMBLIES

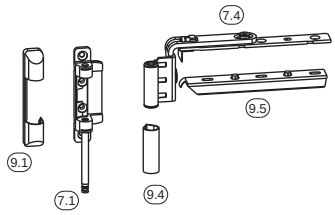

Item	Subassembly	Marking	Scope of use Hw	Scope of use Sw	Catalogue No	
					mushroom deadbolt	cylinder deadbolt
3.1	Drive gear S	S00	<340	-	004-005	004-001
		S01	341-540	-	004-006	004-002
		S02	541-730	-	004-007	004-003
		S03	731-990	-	004-008	004-004
		S1A	991-1250	-	004-013	004-009
		S2	1251-1450	-	004-014	004-010
		S3	1451-1900	-	004-015	004-011
		S4	1901-2400	-	004-016	004-012
3.2	Drive gear SR	SR1A	991-1250	-	004-021	004-017
		SR2	1251-1450	-	004-022	004-018
		SR3	1451-1900	-	004-023	004-019
		SR4	1901-2400	-	004-024	004-020
7.1	Upper hinge bracket Dr S5	Dr S5	-		015-003	
7.2	Lower hinge bracket Dr S5	Dr S5	-		016-011	
7.3	Lower hinge leaf Dr S5	Dr S5/L	-		016-005	
		Dr S5/P	-		016-006	
7.4	Corner hinge leaf Dr S5	Dr S5	-		017-002	
7.5	Middle hinge leaf DrS5	Dr S5	-		019-009	
8.1	Peripheral striker plate	acc. to profile	-		acc. to catalogue page 8/01	
8.2	Lift striker plate	acc. to profile	-		acc. to catalogue page 8/19	
9.1	Bracket guard	IIIB	-		acc. to catalogue page 9/10	
9.2	Bracket guard	XA	-		acc. to catalogue page 9/10	
9.3	Leaf guard	IXB	-		acc. to catalogue page 9/10	
9.4	Bearing guard	IVA	-		acc. to catalogue page 9/10	
9.5	Stop block	-	-		032-004	
9.6	External pressure pad	-	-		acc. to catalogue page 9/01	
9.7	Latch	acc. to profile	-		acc. to catalogue page 9/17	
9.8	Latch deadbolt	-	-		acc. to catalogue page 9/17	
9.9	Lift with blockade	-	-		032-001	

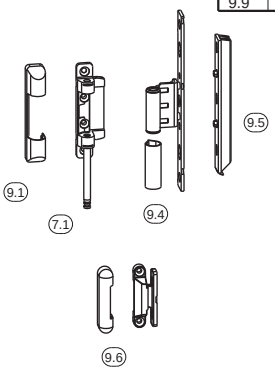

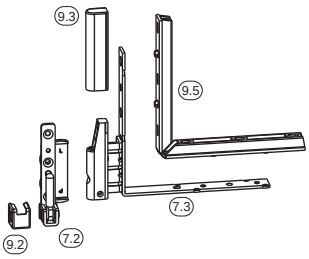

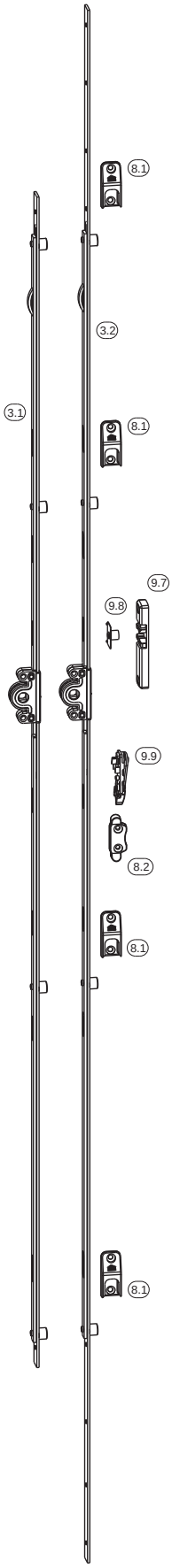

ASSEMBLING OF HARDWARE S5

DRIVE GEAR ZNR
WOODEN WINDOWS, VERSION FOR TURN WINDOWS R
ASSEMBLING OF HARDWARE ELEMENTS IN THE FRAME

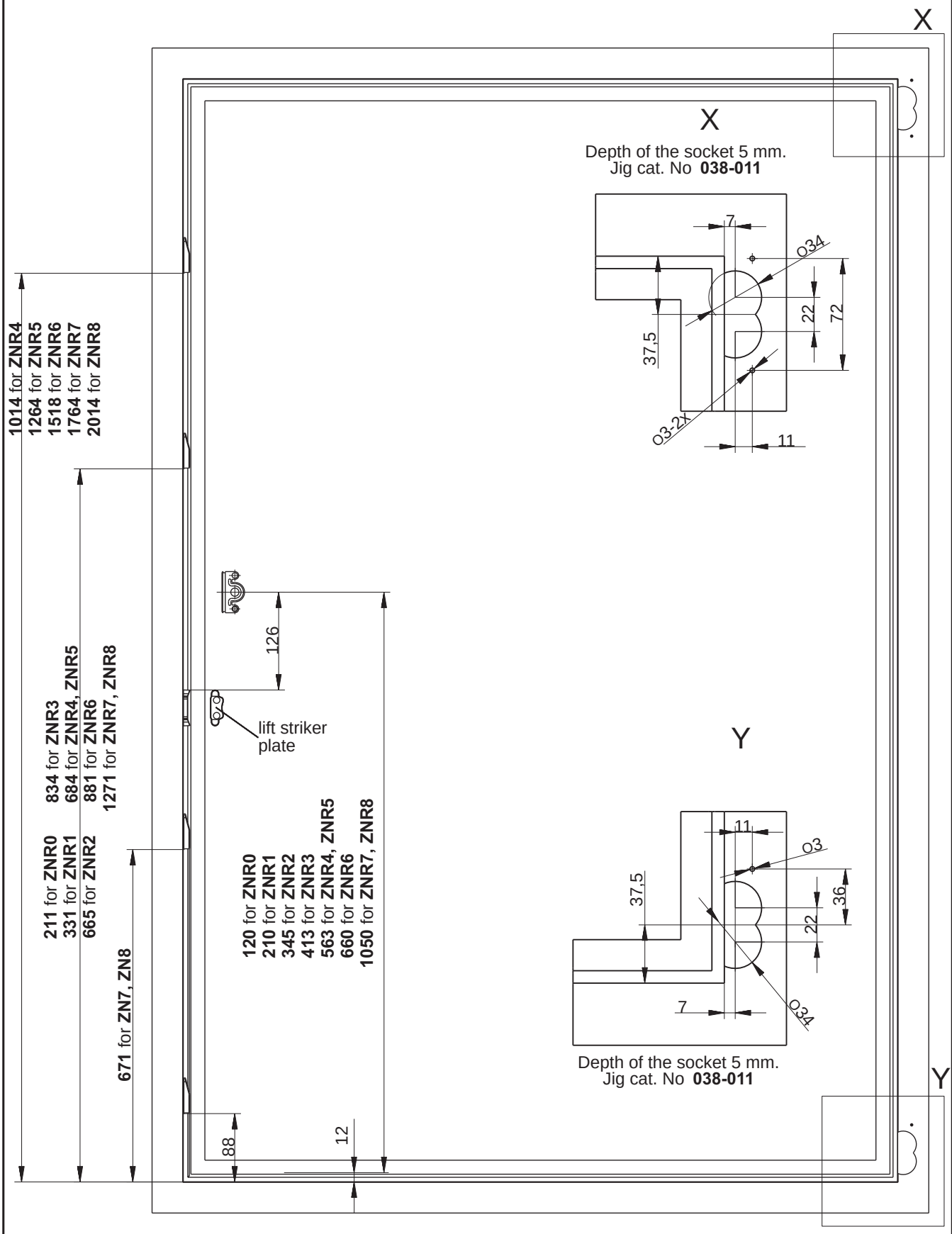

ASSEMBLING OF HARDWARE S5

DRIVE GEAR ZNR
WOODEN WINDOWS, TURN VERSION R
LIST OF BASIC SUBASSEMBLIES

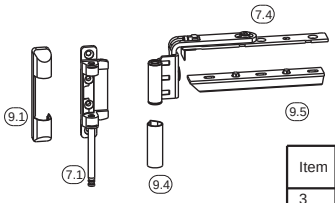

Item	Subassembly	Marking	Scope of use Hw	Scope of use Sw	Catalogue No	
					mushroom deadbolt	cylinder deadbolt
3	Drive gear ZNR	ZNR0	265-540	-	001-068	001-059
		ZNR1	541-720	-	001-069	001-060
		ZNR2	721-900	-	001-070	001-061
		ZNR3	901-1080	-	001-071	001-062
		ZNR4	1081-1330	-	001-072	001-063
		ZNR5	1331-1580	-	001-073	001-064
		ZNR6	1581-1830	-	001-074	001-065
		ZNR7	1831-2080	-	001-075	001-066
		ZNR8	2081-2330	-	001-076	001-067
7.1	Upper hinge bracket Dr S5	Dr S5	-		015-003	
7.2	Lower hinge bracket Dr S5	Dr S5	-		016-011	
7.3	Lower hinge leaf Dr S5	Dr S5/L	-		016-005	
		Dr S5/P	-		016-006	
7.4	Corner hinge leaf Dr S5	Dr S5	-		017-002	
7.5	Middle hinge leaf DrS5	Dr S5	-		019-009	
8.1	Peripheral striker plate	acc. to profile	-		acc. to catalogue page 8/01	
8.2	Lift striker plate	acc. to profile	-		acc. to catalogue page 8/19	
9.1	Bracket guard	IIIB	-		acc. to catalogue page 9/10	
9.2	Bracket guard	XA	-		acc. to catalogue page 9/10	
9.3	Leaf guard	IXB	-		acc. to catalogue page 9/10	
9.4	Bearing guard	IVA	-		acc. to catalogue page 9/10	
9.5	Stop block	-	-		032-004	
9.6	External pressure pad	-	-		acc. to catalogue page 9/01	
9.7	Latch	acc. to profile	-		acc. to catalogue page 9/17	
9.8	Latch deadbolt	-	-		acc. to catalogue page 9/17	
9.9	Lift with blockade	-	-		032-001	

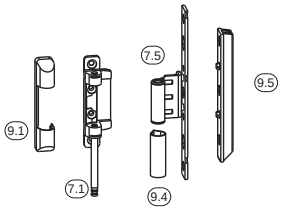

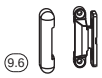

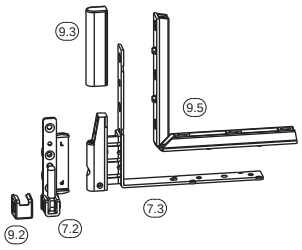

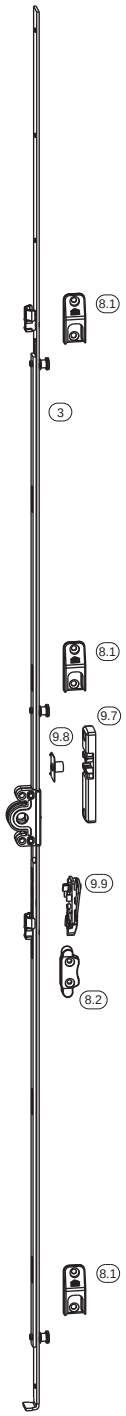

ASSEMBLING OF HARDWARE S5

DRIVE GEAR ZN
WOODEN WINDOWS, VERSION FOR TURN WINDOWS R
ASSEMBLING OF HARDWARE ELEMENTS IN THE FRAME

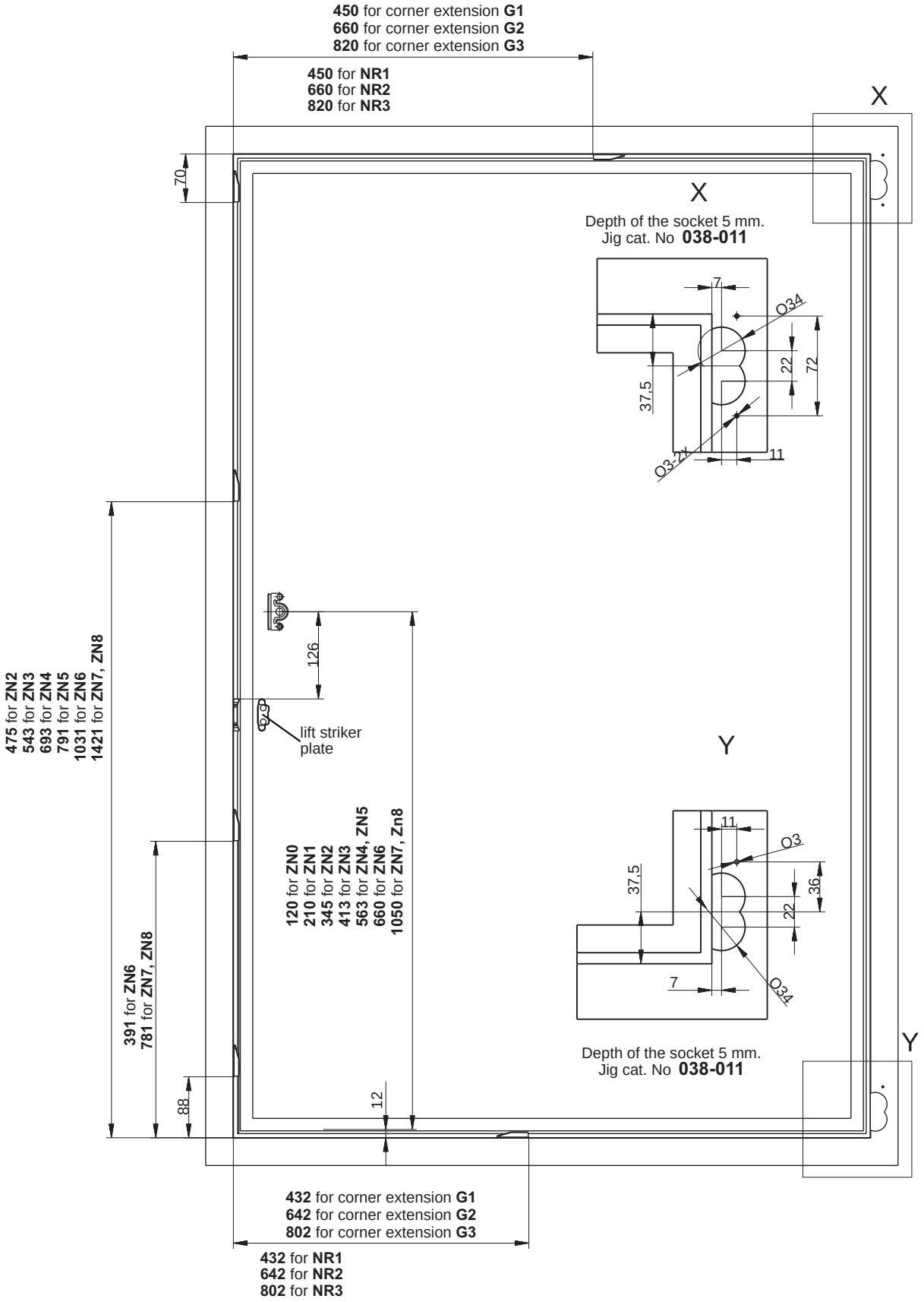

KARO KRAJOWE AKCESORIA I ROZWIĄZANIA OKUCIOWE

ROMB SYSTEM

ASSEMBLING OF HARDWARE S5

DRIVE GEAR ZN
WOODEN WINDOWS, TURN VERSION R
LIST OF BASIC SUBASSEMBLIES

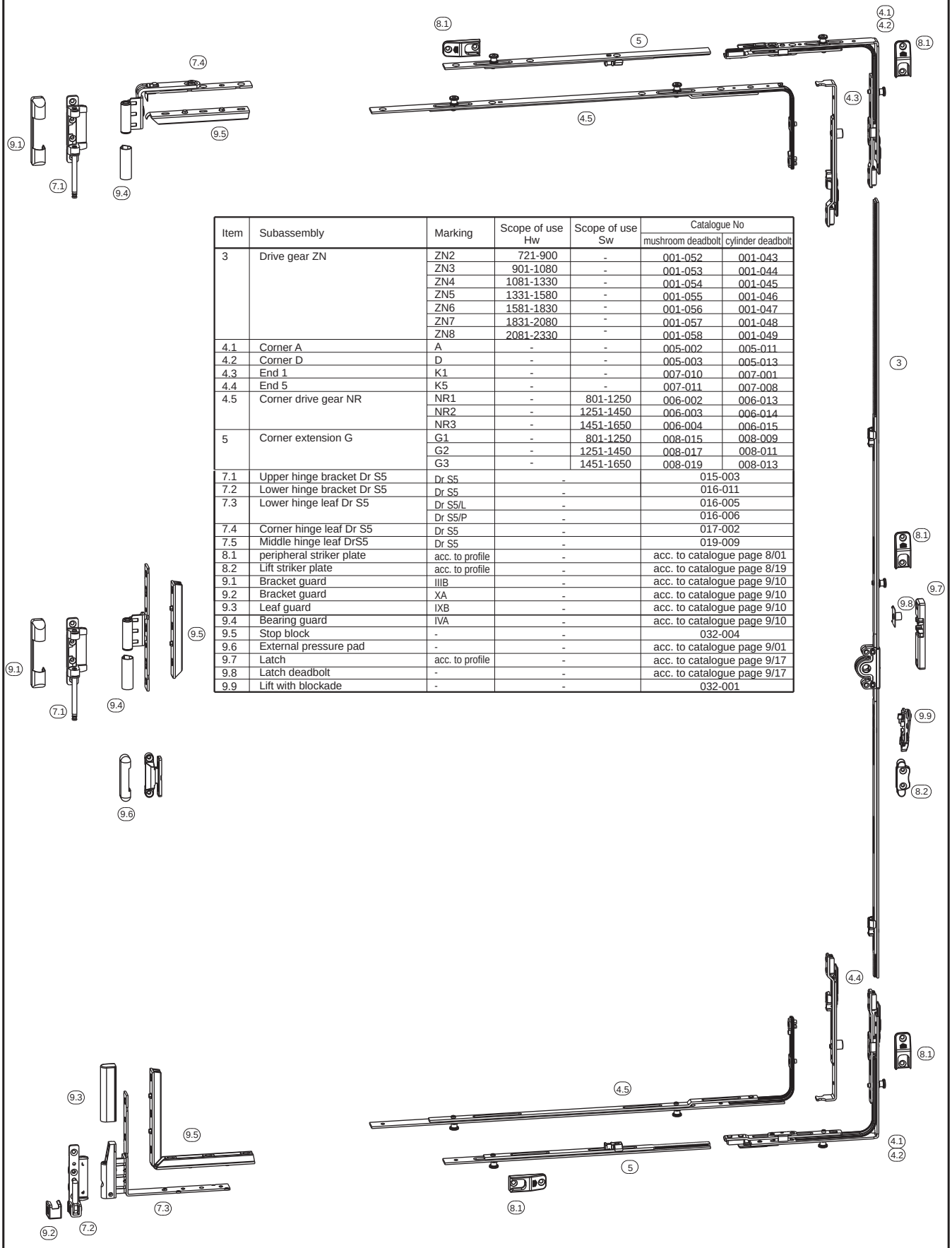

Item	Subassembly	Marking	Scope of use Hw	Scope of use Sw	Catalogue No	
					mushroom deadbolt	cylinder deadbolt
3	Drive gear ZN	ZN2	721-900	-	001-052	001-043
		ZN3	901-1080	-	001-053	001-044
		ZN4	1081-1330	-	001-054	001-045
		ZN5	1331-1580	-	001-055	001-046
		ZN6	1581-1830	-	001-056	001-047
		ZN7	1831-2080	-	001-057	001-048
		ZN8	2081-2330	-	001-058	001-049
4.1	Corner A	A	-	-	005-002	005-011
4.2	Corner D	D	-	-	005-003	005-013
4.3	End 1	K1	-	-	007-010	007-001
4.4	End 5	K5	-	-	007-011	007-008
4.5	Corner drive gear NR	NR1	-	801-1250	006-002	006-013
		NR2	-	1251-1450	006-003	006-014
		NR3	-	1451-1650	006-004	006-015
5	Corner extension G	G1	-	801-1250	008-015	008-009
		G2	-	1251-1450	008-017	008-011
		G3	-	1451-1650	008-019	008-013
7.1	Upper hinge bracket Dr S5	Dr S5	-		015-003	
7.2	Lower hinge bracket Dr S5	Dr S5	-		016-011	
7.3	Lower hinge leaf Dr S5	Dr S5/L	-		016-005	
		Dr S5/P	-		016-006	
7.4	Corner hinge leaf Dr S5	Dr S5	-		017-002	
7.5	Middle hinge leaf DrS5	Dr S5	-		019-009	
8.1	peripheral striker plate	acc. to profile	-		acc. to catalogue page 8/01	
8.2	Lift striker plate	acc. to profile	-		acc. to catalogue page 8/19	
9.1	Bracket guard	IIIB	-		acc. to catalogue page 9/10	
9.2	Bracket guard	XA	-		acc. to catalogue page 9/10	
9.3	Leaf guard	IXB	-		acc. to catalogue page 9/10	
9.4	Bearing guard	IVA	-		acc. to catalogue page 9/10	
9.5	Stop block	-	-		032-004	
9.6	External pressure pad	-	-		acc. to catalogue page 9/01	
9.7	Latch	acc. to profile	-		acc. to catalogue page 9/17	
9.8	Latch deadbolt	-	-		acc. to catalogue page 9/17	
9.9	Lift with blockade	-	-		032-001	

ASSEMBLING OF HARDWARE S5

DRIVE GEAR Z
WOODEN WINDOWS, VERSION FOR TURN WINDOWS R
ASSEMBLING OF HARDWARE ELEMENTS IN THE FRAME

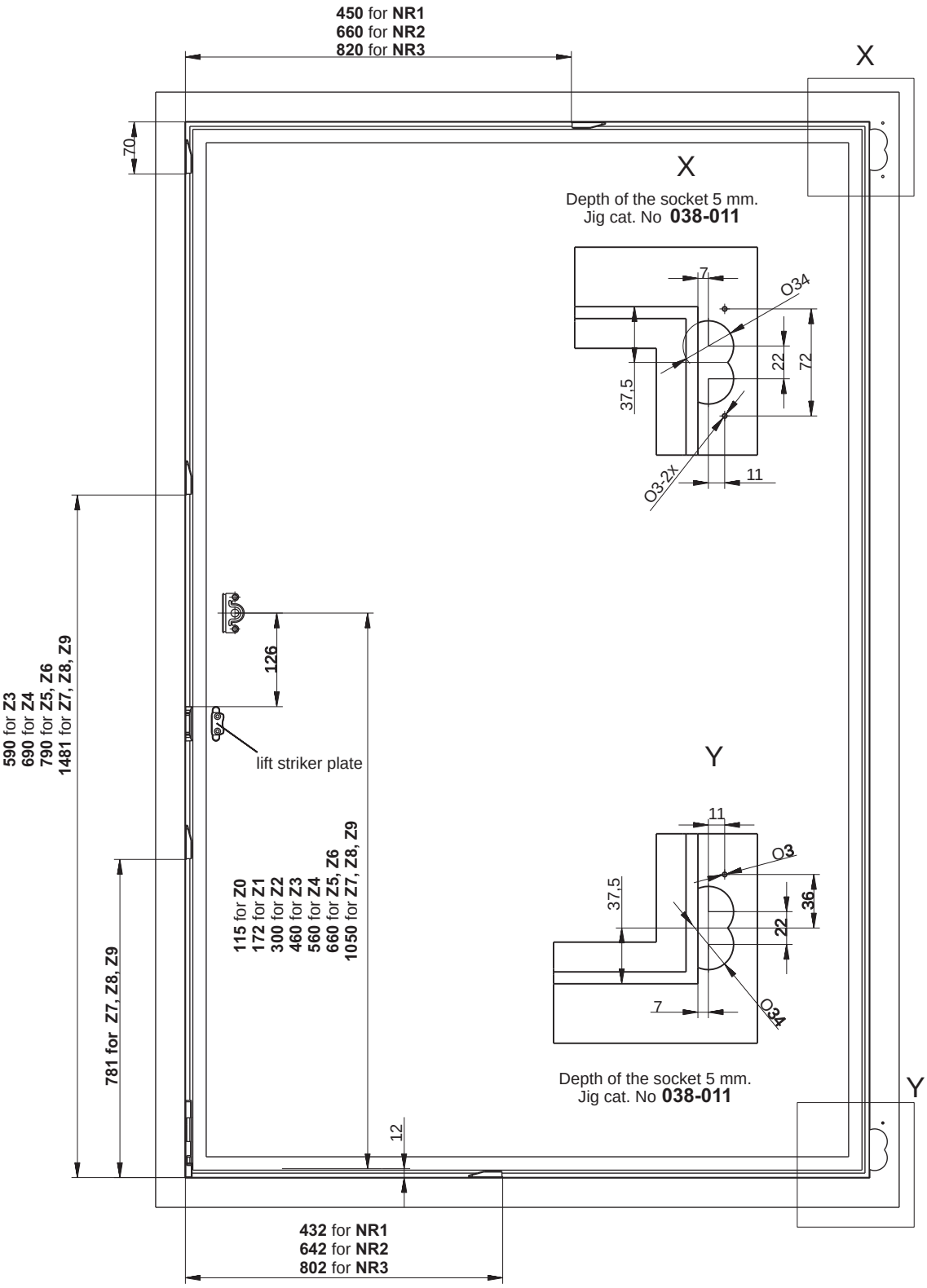

ASSEMBLING OF HARDWARE S5

DRIVE GEAR Z
WOODEN WINDOWS, TURN VERSION R
LIST OF BASIC SUBASSEMBLIES

Item	Subassembly	Marking	Scope of use Hw	Scope of use Sw	Catalogue No	
					mushroom deadbolt	cylinder deadbolt
3	Drive gear Z	Z0	360-540	-	001-001	
		Z1	541-600	-	001-002	
		Z2	601-840	-	001-003	
		Z3	841-1050	-	001-036	001-029
		Z4	1051-1250	-	001-037	001-030
		Z5	1251-1500	-	001-038	001-031
		Z6	1501-1750	-	001-039	001-032
		Z7	1751-2000	-	001-040	001-033
		Z8	2001-2200	-	001-041	001-034
		Z9	2201-2400	-	001-042	001-035
4.1	End 1	K1	-	-	007-010	007-001
4.2	Corner drive gear NR	NR1	-	801-1250	006-002	006-013
		NR2	-	1251-1450	006-003	006-014
		NR3	-	1451-1650	006-004	006-015
7.1	Upper hinge bracket Dr S5	Dr S5	-		015-003	
7.2	Lower hinge bracket Dr S5	Dr S5	-		016-011	
7.3	Lower hinge leaf Dr S5	Dr S5/L	-		016-005	
		Dr S5/P	-		016-006	
7.4	Corner hinge leaf Dr S5	Dr S5	-		017-002	
7.5	Middle hinge leaf DrS5	Dr S5	-		019-009	
8.1	Peripheral striker plate	acc. to profile	-		acc. to catalogue page 8/01	
8.2	Lift striker plate	acc. to profile	-		acc. to catalogue page 8/19	
9.1	Bracket guard	IIIB	-		acc. to catalogue page 9/10	
9.2	Bracket guard	XA	-		acc. to catalogue page 9/10	
9.3	Leaf guard	IXB	-		acc. to catalogue page 9/10	
9.4	Bearing guard	IVA	-		acc. to catalogue page 9/10	
9.5	Stop block	-	-		032-004	
9.6	external pressure pad	-	-		acc. to catalogue page 9/01	
9.7	Latch	acc. to profile	-		acc. to catalogue page 9/17	
9.8	Latch deadbolt	-	-		acc. to catalogue page 9/17	
9.9	Lift with blockade	-	-		032-001	

ASSEMBLING OF HARDWARE S5

DRIVE GEAR Z B

WOODEN WINDOWS, VERSION FOR DOUBLE WINDOWS W/O POST RU-

ASSEMBLING OF HARDWARE ELEMENTS IN THE FRAME

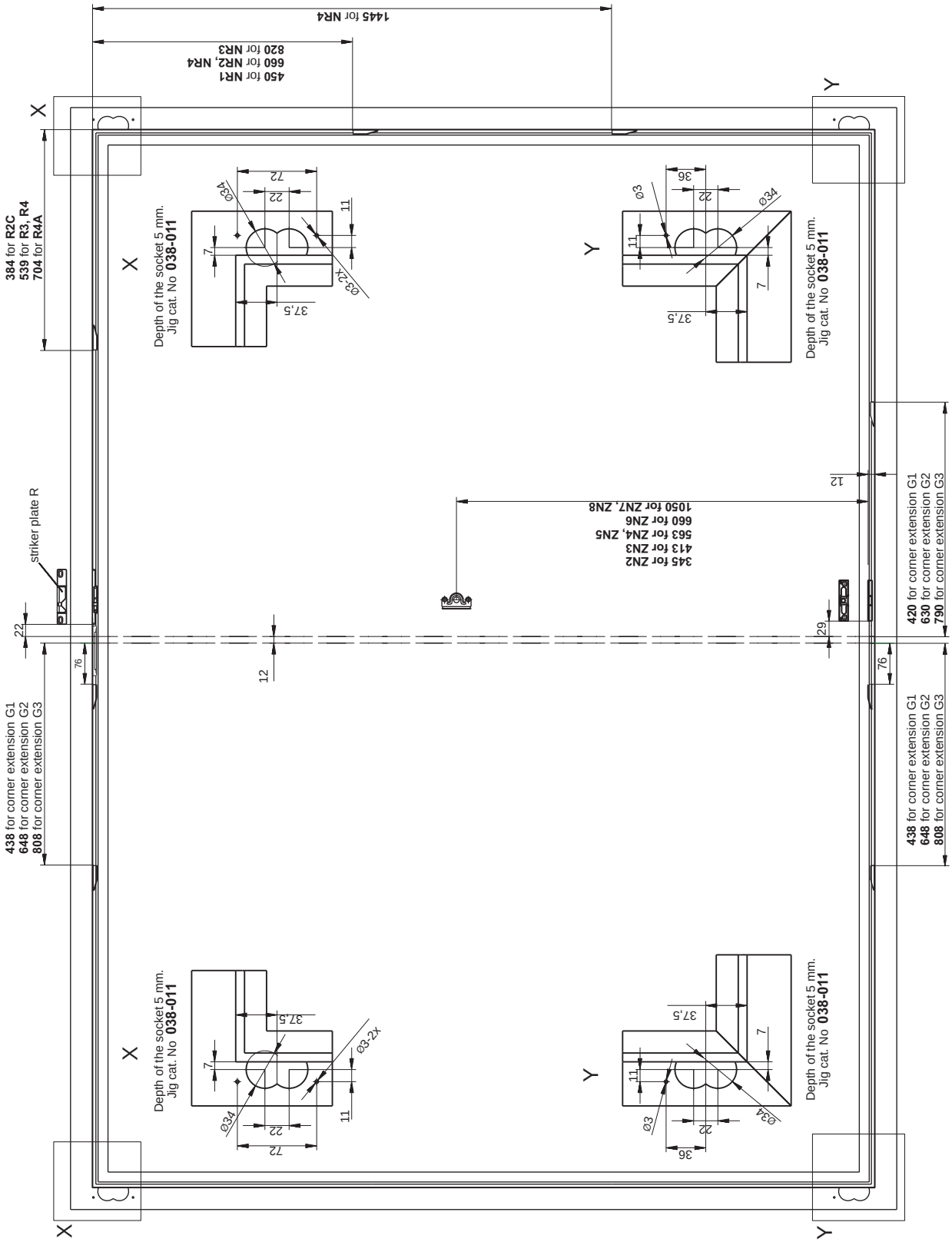

KARO

KRAJOWE AKCESORIA I ROZWIĄZANIA OKUCIOWE

ROMB SYSTEM

ASSEMBLING OF HARDWARE S5

DRIVE GEAR ZN BZ

WOODEN WINDOWS, VERSION FOR DOUBLE WINDOWS W/O POST RU-R

LIST OF BASIC SUBASSEMBLIES

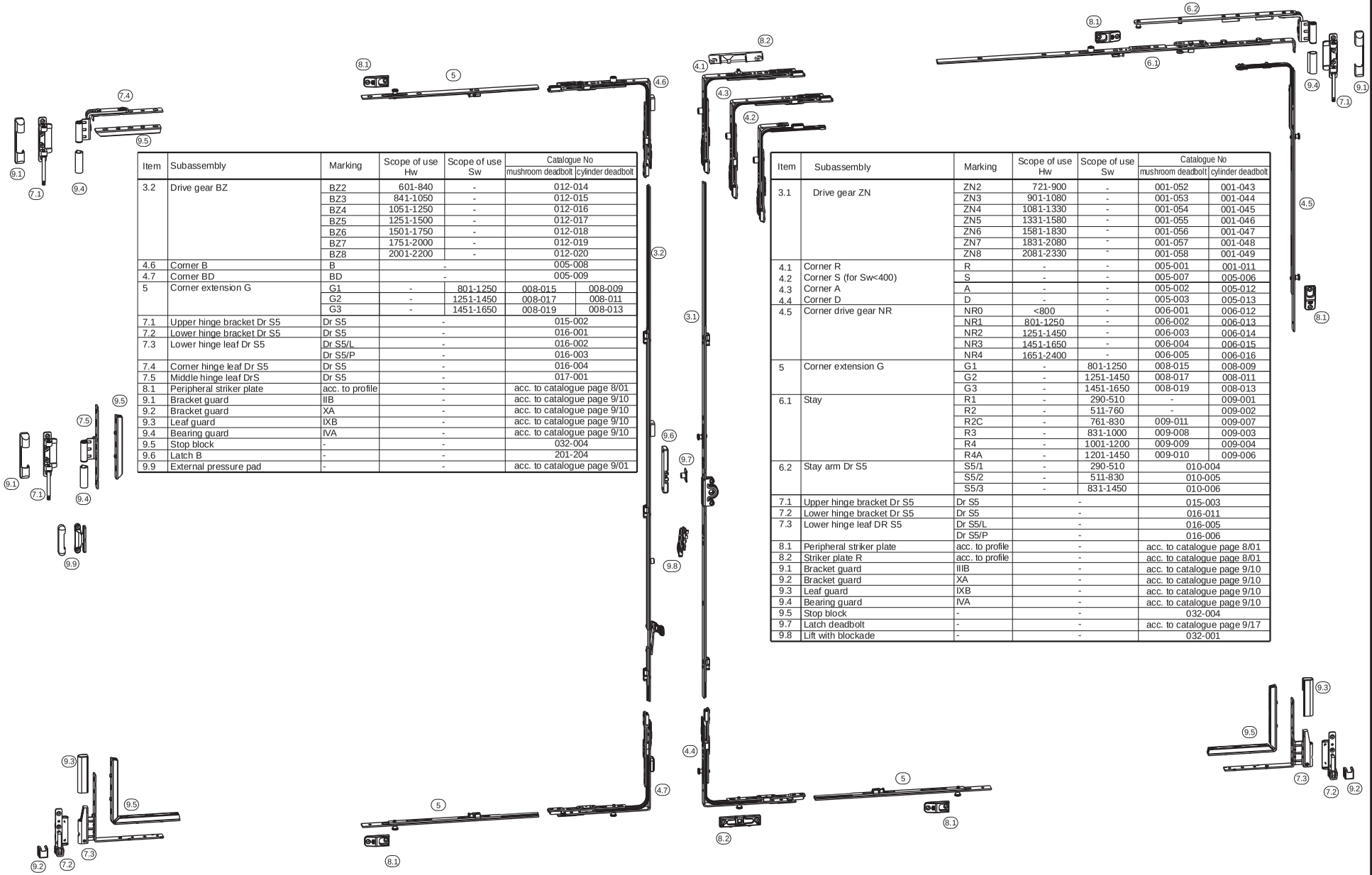

Item	Subassembly	Marking	Scope of use Hw	Scope of use Sw	Catalogue No mushroom deadbolt	Catalogue No cylinder deadbolt
3.2	Drive gear BZ	BZ2	601-840	-	012-014	
		BZ3	841-1050	-	012-015	
		BZ4	1051-1250	-	012-016	
		BZ5	1251-1500	-	012-017	
		BZ6	1501-1750	-	012-018	
		BZ7	1751-2000	-	012-019	
		BZ8	2001-2200	-	012-020	
4.6	Corner B	B	-		005-008	
4.7	Corner BD	BD	-		005-009	
5	Corner extension G	G1	-	801-1250	008-015	008-009
		G2	-	1251-1450	008-017	008-011
		G3	-	1451-1650	008-019	008-013
7.1	Upper hinge bracket Dr S5	Dr S5	-		015-002	
7.2	Lower hinge bracket Dr S5	Dr S5	-		016-001	
7.3	Lower hinge leaf Dr S5	Dr S5/L	-		016-002	
		Dr S5/P	-		016-003	
7.4	Corner hinge leaf Dr S5	Dr S5	-		016-004	
7.5	Middle hinge leaf DrS	Dr S5	-		017-001	
8.1	Peripheral striker plate	acc. to profile	-		acc. to catalogue page 8/01	
9.1	Bracket guard	IIB	-		acc. to catalogue page 9/10	
9.2	Bracket guard	XA	-		acc. to catalogue page 9/10	
9.3	Leaf guard	IXB	-		acc. to catalogue page 9/10	
9.4	Bearing guard	IVA	-		acc. to catalogue page 9/10	
9.5	Stop block	-	-		032-004	
9.6	Latch B	-	-		201-204	
9.9	External pressure pad	-	-		acc. to catalogue page 9/01	

Item	Subassembly	Marking	Scope of use Hw	Scope of use Sw	Catalogue No mushroom deadbolt	Catalogue No cylinder deadbolt
3.1	Drive gear ZN	ZN2	721-900	-	001-052	001-043
		ZN3	901-1080	-	001-053	001-044
		ZN4	1081-1330	-	001-054	001-045
		ZN5	1331-1580	-	001-055	001-046
		ZN6	1581-1830	-	001-056	001-047
		ZN7	1831-2080	-	001-057	001-048
		ZN8	2081-2330	-	001-058	001-049
4.1	Corner R	R	-	-	005-001	001-011
4.2	Corner S (for Sw<400)	S	-	-	005-007	005-006
4.3	Corner A	A	-	-	005-002	005-012
4.4	Corner D	D	-	-	005-003	005-013
4.5	Corner drive gear NR	NR0	<800	-	006-001	006-012
		NR1	801-1250	-	006-002	006-013
		NR2	1251-1450	-	006-003	006-014
		NR3	1451-1650	-	006-004	006-015
		NR4	1651-2400	-	006-005	006-016
5	Corner extension G	G1	-	801-1250	008-015	008-009
		G2	-	1251-1450	008-017	008-011
		G3	-	1451-1650	008-019	008-013
6.1	Stay	R1	-	290-510	-	009-001
		R2	-	511-760	-	009-002
		R2C	-	761-830	009-011	009-007
		R3	-	831-1000	009-008	009-003
		R4	-	1001-1200	009-009	009-004
		R4A	-	1201-1450	009-010	009-006
6.2	Stay arm Dr S5	S5/1	-	290-510	010-004	
		S5/2	-	511-830	010-005	
		S5/3	-	831-1450	010-006	
7.1	Upper hinge bracket Dr S5	Dr S5	-		015-003	
7.2	Lower hinge bracket Dr S5	Dr S5	-		016-011	
7.3	Lower hinge leaf DR S5	Dr S5/L	-		016-005	
		Dr S5/P	-		016-006	
8.1	Peripheral striker plate	acc. to profile	-		acc. to catalogue page 8/01	
8.2	Striker plate R	acc. to profile	-		acc. to catalogue page 8/01	
9.1	Bracket guard	IIIB	-		acc. to catalogue page 9/10	
9.2	Bracket guard	XA	-		acc. to catalogue page 9/10	
9.3	Leaf guard	IXB	-		acc. to catalogue page 9/10	
9.4	Bearing guard	IVA	-		acc. to catalogue page 9/10	
9.5	Stop block	-	-		032-004	
9.7	Latch deadbolt	-	-		acc. to catalogue page 9/17	
9.8	Lift with blockade	-	-		032-001	

ASSEMBLING OF HARDWARE S5

DRIVE GEAR Z B
WOODEN WINDOWS, VERSION FOR DOUBLE WINDOWS W/O POST RU-R
ASSEMBLING OF HARDWARE ELEMENTS IN THE FRAME

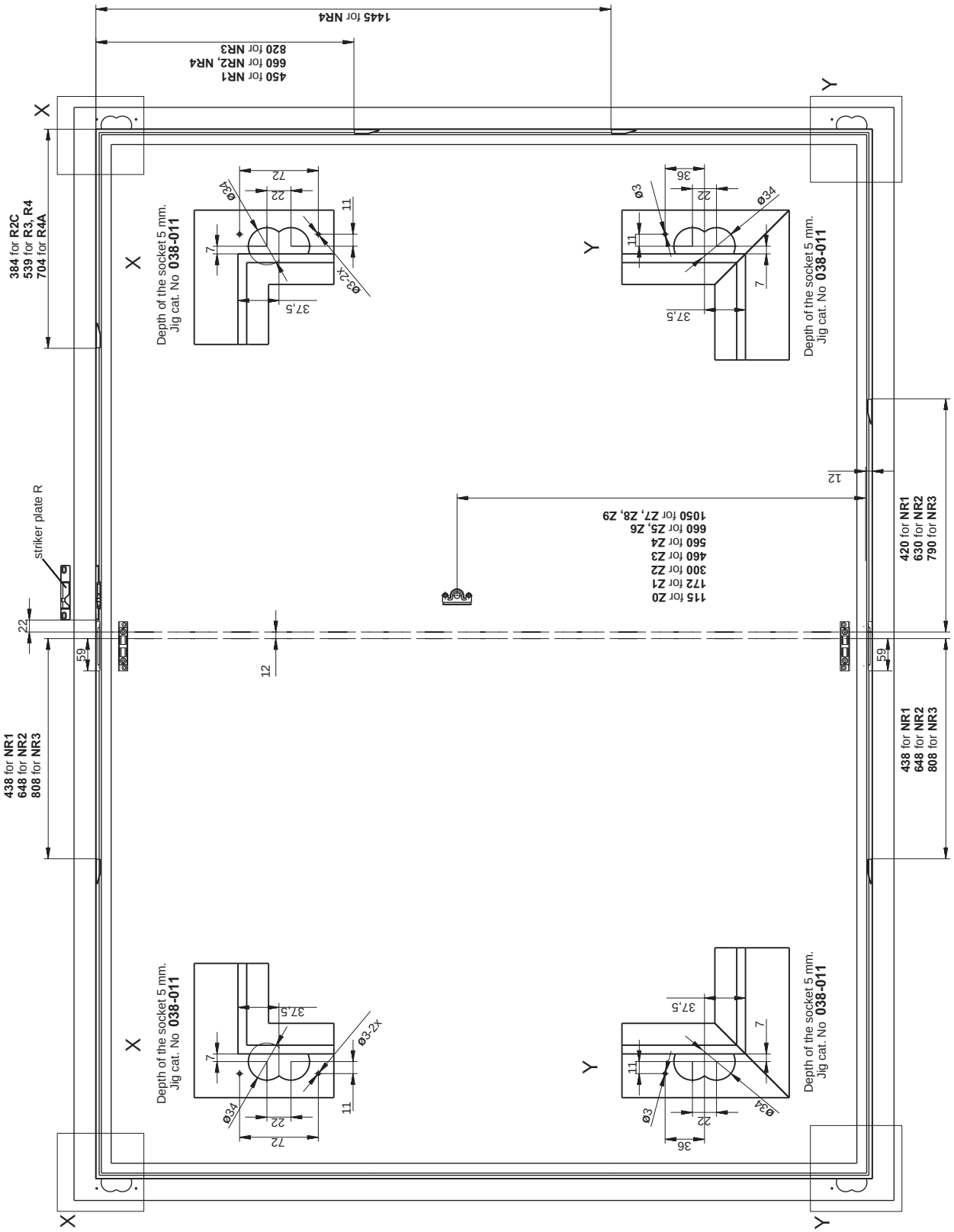

KARO

KRAJOWE AKCESORIA I ROZWIĄZANIA OKUCIOWE

ROMB SYSTEM

ASSEMBLING OF HARDWARE S5

DRIVE GEAR Z B

WOODEN WINDOWS, VERSION FOR DOUBLE WINDOWS W/O POST RU-R

LIST OF BASIC ELEMENTS

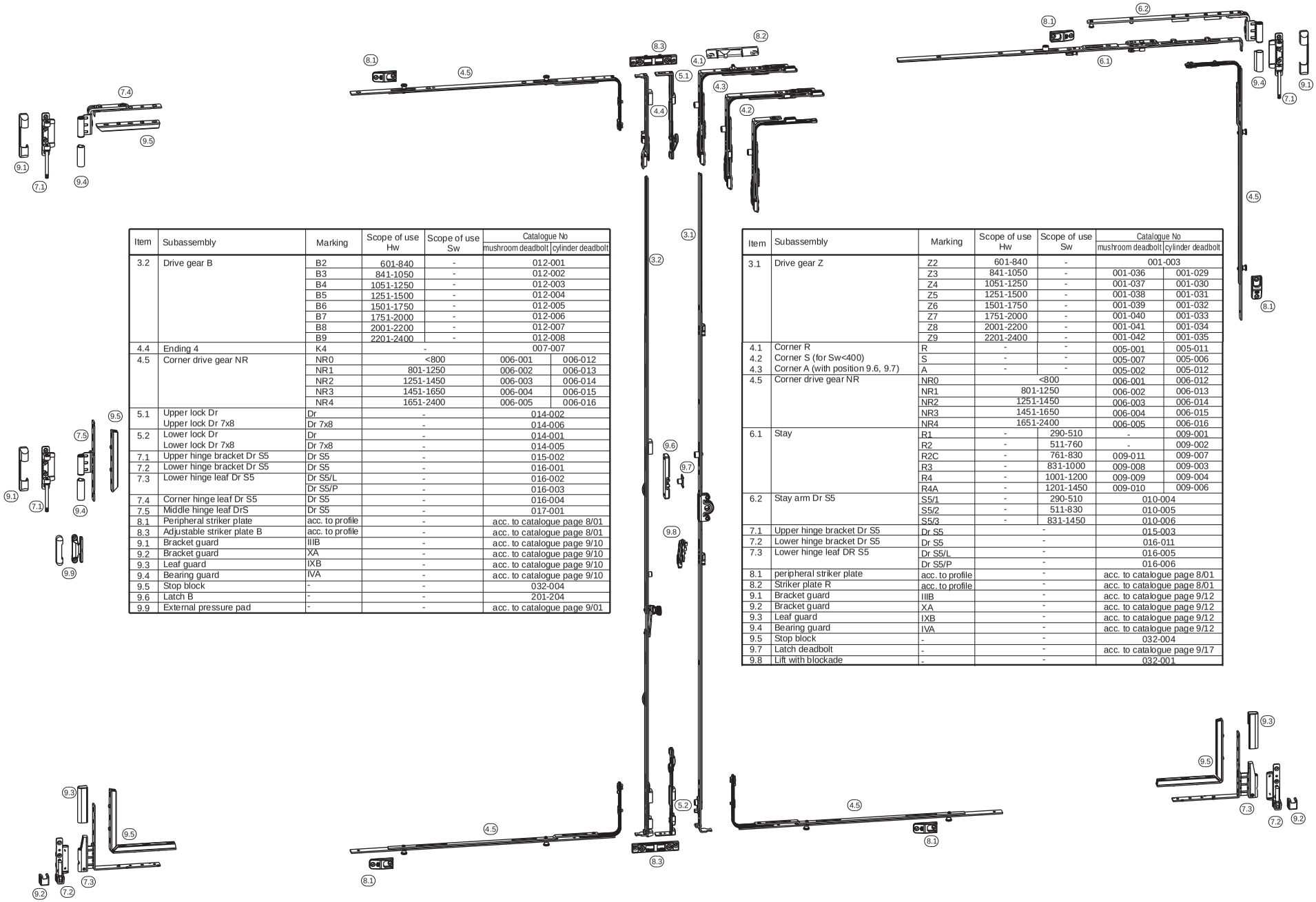

Item	Subassembly	Marking	Scope of use Hw	Scope of use Sw	Catalogue No mushroom deadbolt	Catalogue No cylinder deadbolt
3.2	Drive gear B	B2	601-840	-	012-001	
		B3	841-1050	-	012-002	
		B4	1051-1250	-	012-003	
		B5	1251-1500	-	012-004	
		B6	1501-1750	-	012-005	
		B7	1751-2000	-	012-006	
		B8	2001-2200	-	012-007	
		B9	2201-2400	-	012-008	
4.4	Ending 4	K4	-		007-007	
4.5	Corner drive gear NR	NR0	<800		006-001	006-012
		NR1	801-1250		006-002	006-013
		NR2	1251-1450		006-003	006-014
		NR3	1451-1650		006-004	006-015
		NR4	1651-2400		006-005	006-016
5.1	Upper lock Dr	Dr	-		014-002	
	Upper lock Dr 7x8	Dr 7x8	-		014-006	
5.2	Lower lock Dr	Dr	-		014-001	
	Lower lock Dr 7x8	Dr 7x8	-		014-005	
7.1	Upper hinge bracket Dr S5	Dr S5	-		015-002	
7.2	Lower hinge bracket Dr S5	Dr S5	-		016-001	
7.3	Lower hinge leaf Dr S5	Dr S5/L	-		016-002	
		Dr S5/P	-		016-003	
7.4	Corner hinge leaf Dr S5	Dr S5	-		016-004	
7.5	Middle hinge leaf DrS	Dr S5	-		017-001	
8.1	Peripheral striker plate	acc. to profile	-		acc. to catalogue page 8/01	
8.3	Adjustable striker plate B	acc. to profile	-		acc. to catalogue page 8/01	
9.1	Bracket guard	IIIB	-		acc. to catalogue page 9/10	
9.2	Bracket guard	XA	-		acc. to catalogue page 9/10	
9.3	Leaf guard	IXB	-		acc. to catalogue page 9/10	
9.4	Bearing guard	IVA	-		acc. to catalogue page 9/10	
9.5	Stop block	-	-		032-004	
9.6	Latch B	-	-		201-204	
9.9	External pressure pad	-	-		acc. to catalogue page 9/01	

Item	Subassembly	Marking	Scope of use Hw	Scope of use Sw	Catalogue No mushroom deadbolt	Catalogue No cylinder deadbolt
3.1	Drive gear Z	Z2	601-840	-	001-003	
		Z3	841-1050	-	001-036	001-029
		Z4	1051-1250	-	001-037	001-030
		Z5	1251-1500	-	001-038	001-031
		Z6	1501-1750	-	001-039	001-032
		Z7	1751-2000	-	001-040	001-033
		Z8	2001-2200	-	001-041	001-034
		Z9	2201-2400	-	001-042	001-035
4.1	Corner R	R	-	-	005-001	005-011
4.2	Corner S (for Sw<400)	S	-	-	005-007	005-006
4.3	Corner A (with position 9.6, 9.7)	A	-	-	005-002	005-012
4.5	Corner drive gear NR	NR0	<800		006-001	006-012
		NR1	801-1250		006-002	006-013
		NR2	1251-1450		006-003	006-014
		NR3	1451-1650		006-004	006-015
		NR4	1651-2400		006-005	006-016
6.1	Stay	R1	-	290-510	-	009-001
		R2	-	511-760	-	009-002
		R2C	-	761-830	009-011	009-007
		R3	-	831-1000	009-008	009-003
		R4	-	1001-1200	009-009	009-004
		R4A	-	1201-1450	009-010	009-006
6.2	Stay arm Dr S5	S5/1	-	290-510	010-004	
		S5/2	-	511-830	010-005	
		S5/3	-	831-1450	010-006	
7.1	Upper hinge bracket Dr S5	Dr S5	-		015-003	
7.2	Lower hinge bracket Dr S5	Dr S5	-		016-011	
7.3	Lower hinge leaf DR S5	Dr S5/L	-		016-005	
		Dr S5/P	-		016-006	
8.1	peripheral striker plate	acc. to profile	-		acc. to catalogue page 8/01	
8.2	Striker plate R	acc. to profile	-		acc. to catalogue page 8/01	
9.1	Bracket guard	IIIB	-		acc. to catalogue page 9/12	
9.2	Bracket guard	XA	-		acc. to catalogue page 9/12	
9.3	Leaf guard	IXB	-		acc. to catalogue page 9/12	
9.4	Bearing guard	IVA	-		acc. to catalogue page 9/12	
9.5	Stop block	-	-		032-004	
9.7	Latch deadbolt	-	-		acc. to catalogue page 9/17	
9.8	Lift with blockade	-	-		032-001	

ASSEMBLING OF HARDWARE S5

DRIVE GEAR ZN
WOODEN WINDOWS, TURN / TILT VERSION RU
ASSEMBLING OF HARDWARE ELEMENTS ON THE FRAME

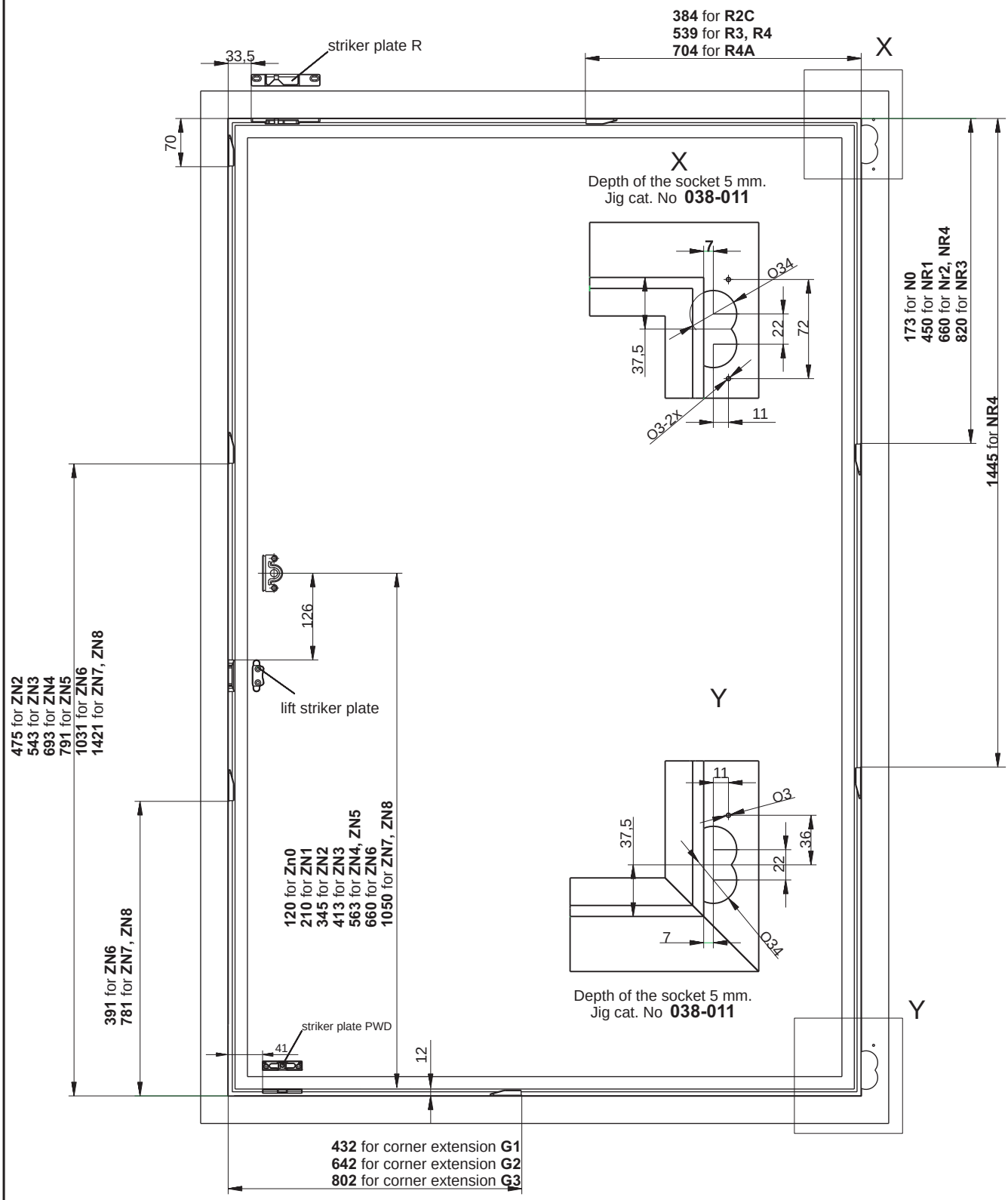

KARO KRAJOWE AKCESORIA I ROZWIĄZANIA OKUCIOWE

ROMB SYSTEM

ASSEMBLING OF THE HARDWARE S5

DRIVE GEAR ZN
WOODEN WINDOW, TURN / TILT VERSION RU
LIST OF BASIC SUBASSEMBLIES

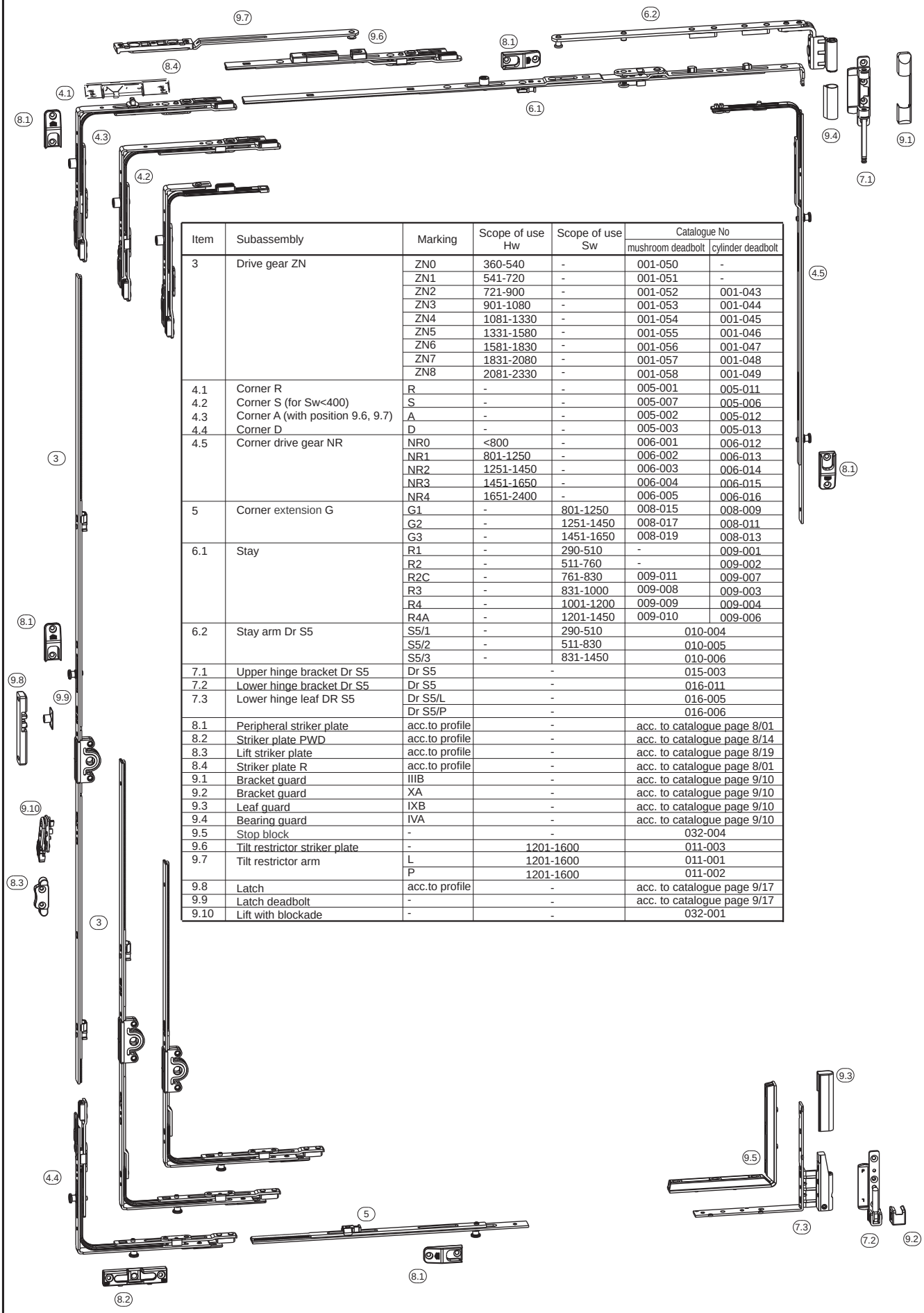

Item	Subassembly	Marking	Scope of use Hw	Scope of use Sw	Catalogue No mushroom deadbolt	Catalogue No cylinder deadbolt
3	Drive gear ZN	ZN0	360-540	-	001-050	-
		ZN1	541-720	-	001-051	-
		ZN2	721-900	-	001-052	001-043
		ZN3	901-1080	-	001-053	001-044
		ZN4	1081-1330	-	001-054	001-045
		ZN5	1331-1580	-	001-055	001-046
		ZN6	1581-1830	-	001-056	001-047
		ZN7	1831-2080	-	001-057	001-048
		ZN8	2081-2330	-	001-058	001-049
4.1	Corner R	R	-	-	005-001	005-011
4.2	Corner S (for Sw<400)	S	-	-	005-007	005-006
4.3	Corner A (with position 9.6, 9.7)	A	-	-	005-002	005-012
4.4	Corner D	D	-	-	005-003	005-013
4.5	Corner drive gear NR	NR0	<800	-	006-001	006-012
		NR1	801-1250	-	006-002	006-013
		NR2	1251-1450	-	006-003	006-014
		NR3	1451-1650	-	006-004	006-015
		NR4	1651-2400	-	006-005	006-016
5	Corner extension G	G1	-	801-1250	008-015	008-009
		G2	-	1251-1450	008-017	008-011
		G3	-	1451-1650	008-019	008-013
6.1	Stay	R1	-	290-510	-	009-001
		R2	-	511-760	-	009-002
		R2C	-	761-830	009-011	009-007
		R3	-	831-1000	009-008	009-003
		R4	-	1001-1200	009-009	009-004
		R4A	-	1201-1450	009-010	009-006
6.2	Stay arm Dr S5	S5/1	-	290-510	010-004	
		S5/2	-	511-830	010-005	
		S5/3	-	831-1450	010-006	
7.1	Upper hinge bracket Dr S5	Dr S5	-		015-003	
7.2	Lower hinge bracket Dr S5	Dr S5	-		016-011	
7.3	Lower hinge leaf DR S5	Dr S5/L	-		016-005	
		Dr S5/P	-		016-006	
8.1	Peripheral striker plate	acc.to profile	-		acc. to catalogue page 8/01	
8.2	Striker plate PWD	acc.to profile	-		acc. to catalogue page 8/14	
8.3	Lift striker plate	acc.to profile	-		acc. to catalogue page 8/19	
8.4	Striker plate R	acc.to profile	-		acc. to catalogue page 8/01	
9.1	Bracket guard	IIIB	-		acc. to catalogue page 9/10	
9.2	Bracket guard	XA	-		acc. to catalogue page 9/10	
9.3	Leaf guard	IXB	-		acc. to catalogue page 9/10	
9.4	Bearing guard	IVA	-		acc. to catalogue page 9/10	
9.5	Stop block	-	-		032-004	
9.6	Tilt restrictor striker plate	-	1201-1600		011-003	
9.7	Tilt restrictor arm	L	1201-1600		011-001	
		P	1201-1600		011-002	
9.8	Latch	acc.to profile	-		acc. to catalogue page 9/17	
9.9	Latch deadbolt	-	-		acc. to catalogue page 9/17	
9.10	Lift with blockade	-	-		032-001	

ASSEMBLING OF HARDWARE S5

DRIVE GEAR Z, ZN
WOODEN WINDOWS, TURN / TILT VERSION RU
ASSEMBLING OF HARDWARE ELEMENTS ON THE FRAME

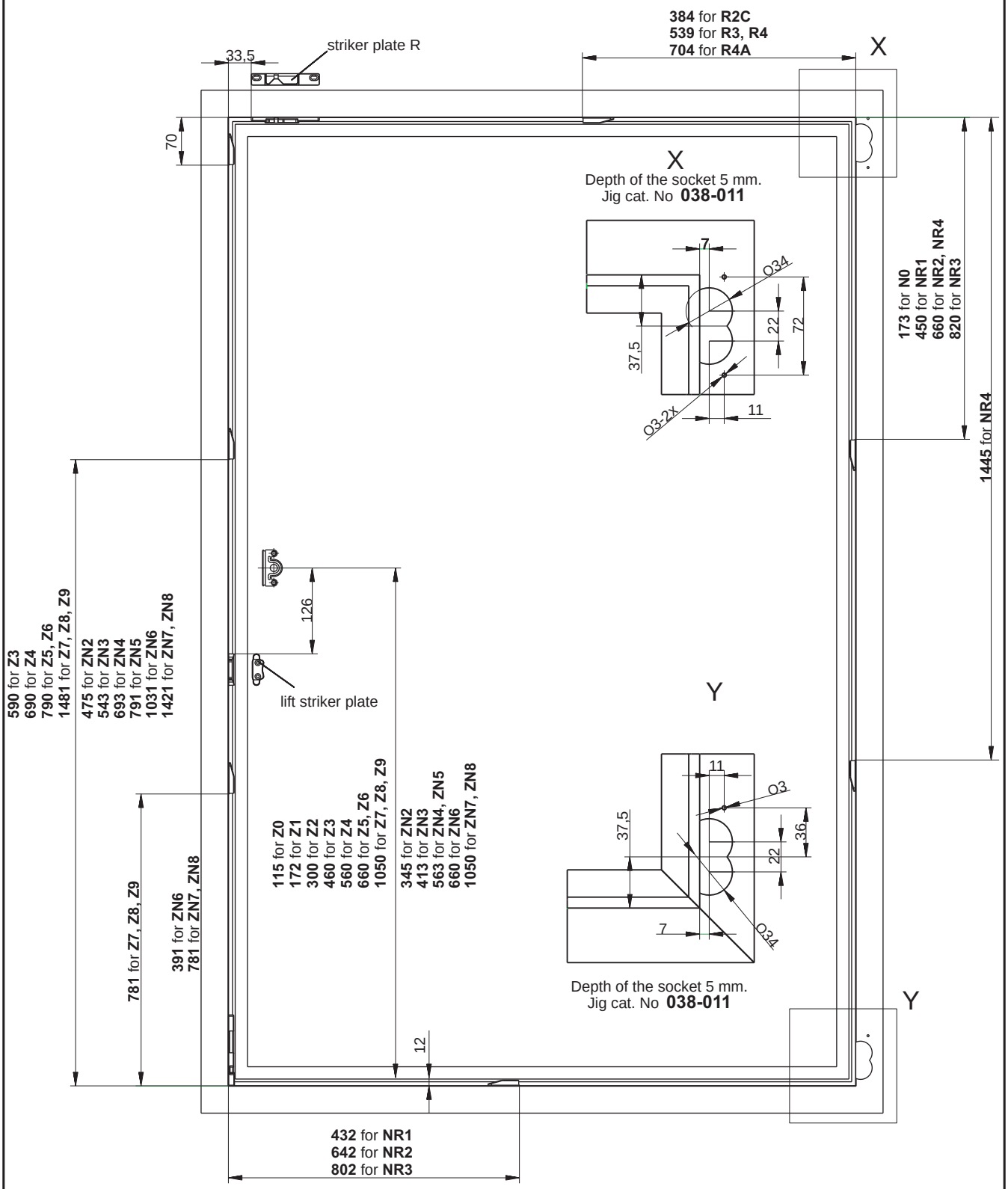

ASSEMBLING OF HARDWARE DrC

DRIVE GEAR S, SR
WOODEN WINDOWS, TURN VERSION R
ASSEMBLING OF HARDWARE ELEMENTS ON THE FRAME

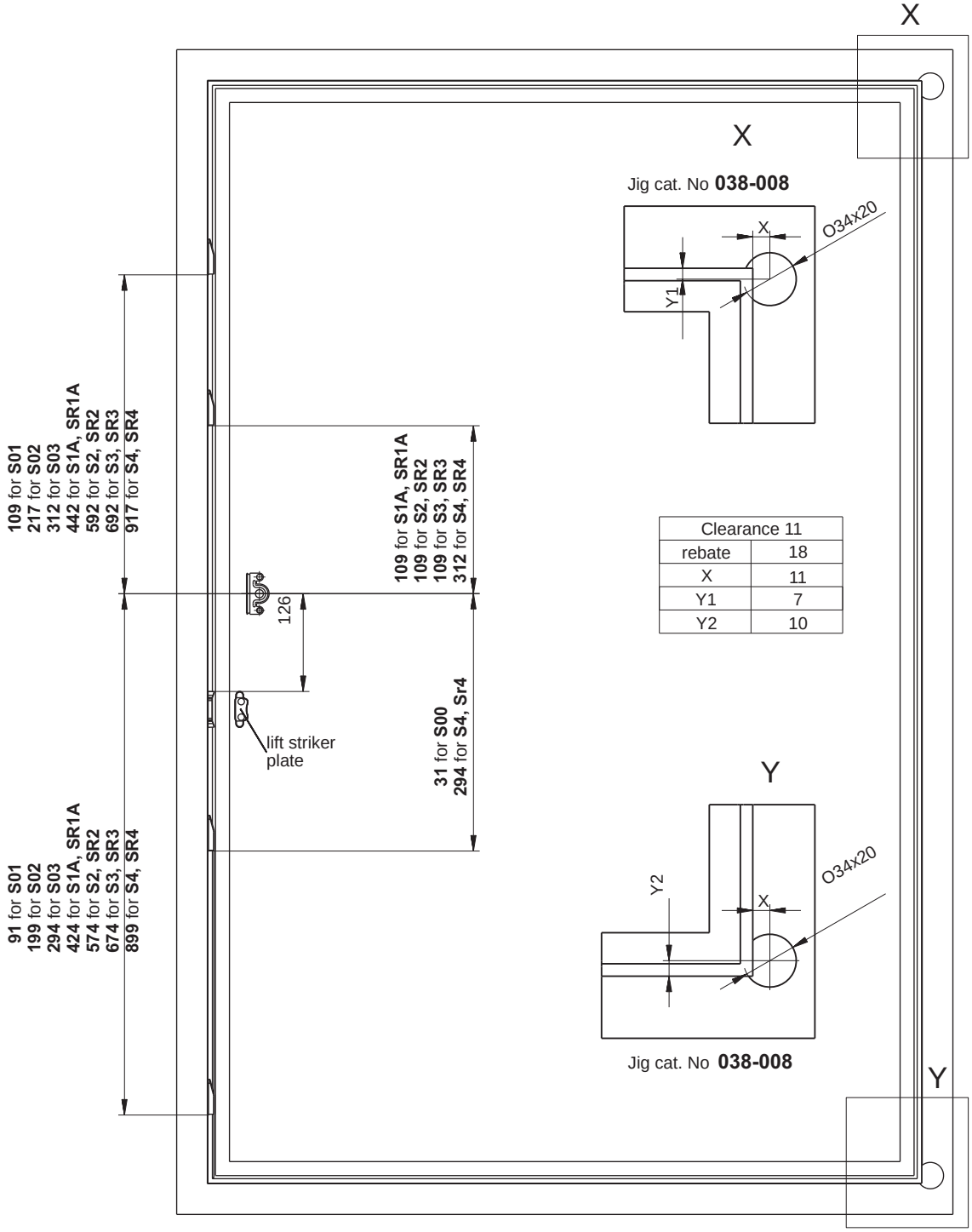

Clearance 11	
rebate	18
X	11
Y1	7
Y2	10

ASSEMBLING OF HARDWARE S5

DRIVE GEAR Z, ZN
WOODEN WINDOWS, TURN / TILT VERSION RU
ASSEMBLING OF HARDWARE ELEMENTS ON THE FRAME

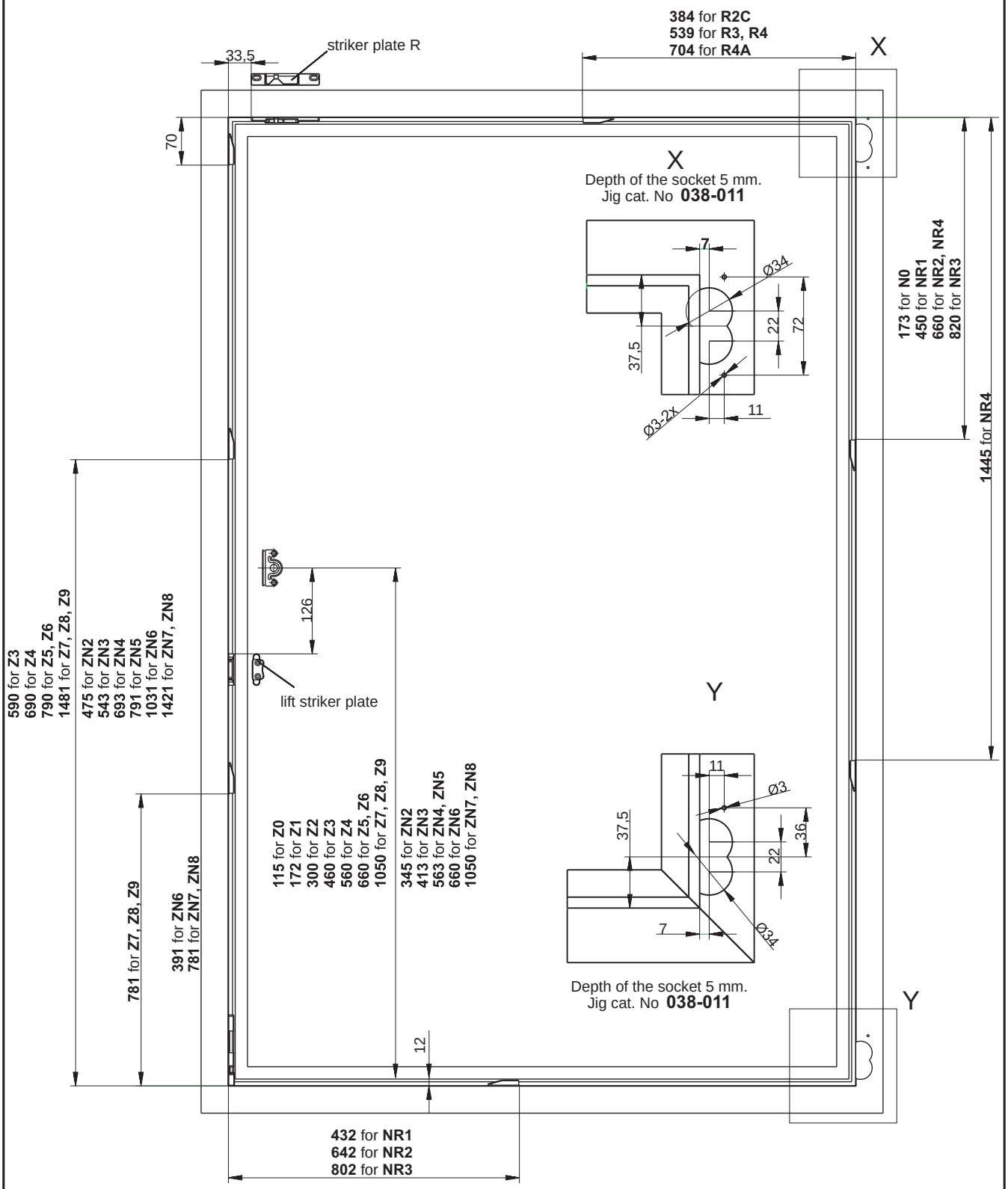

KARO KRAJOWE AKCESORIA I ROZWIĄZANIA OKUCIOWE

ROMB SYSTEM

ASSEMBLING OF THE HARDWARE S5

DRIVE GEAR ZN
WOODEN WINDOW, TURN / TILT VERSION RU
LIST OF BASIC SUBASSEMBLIES

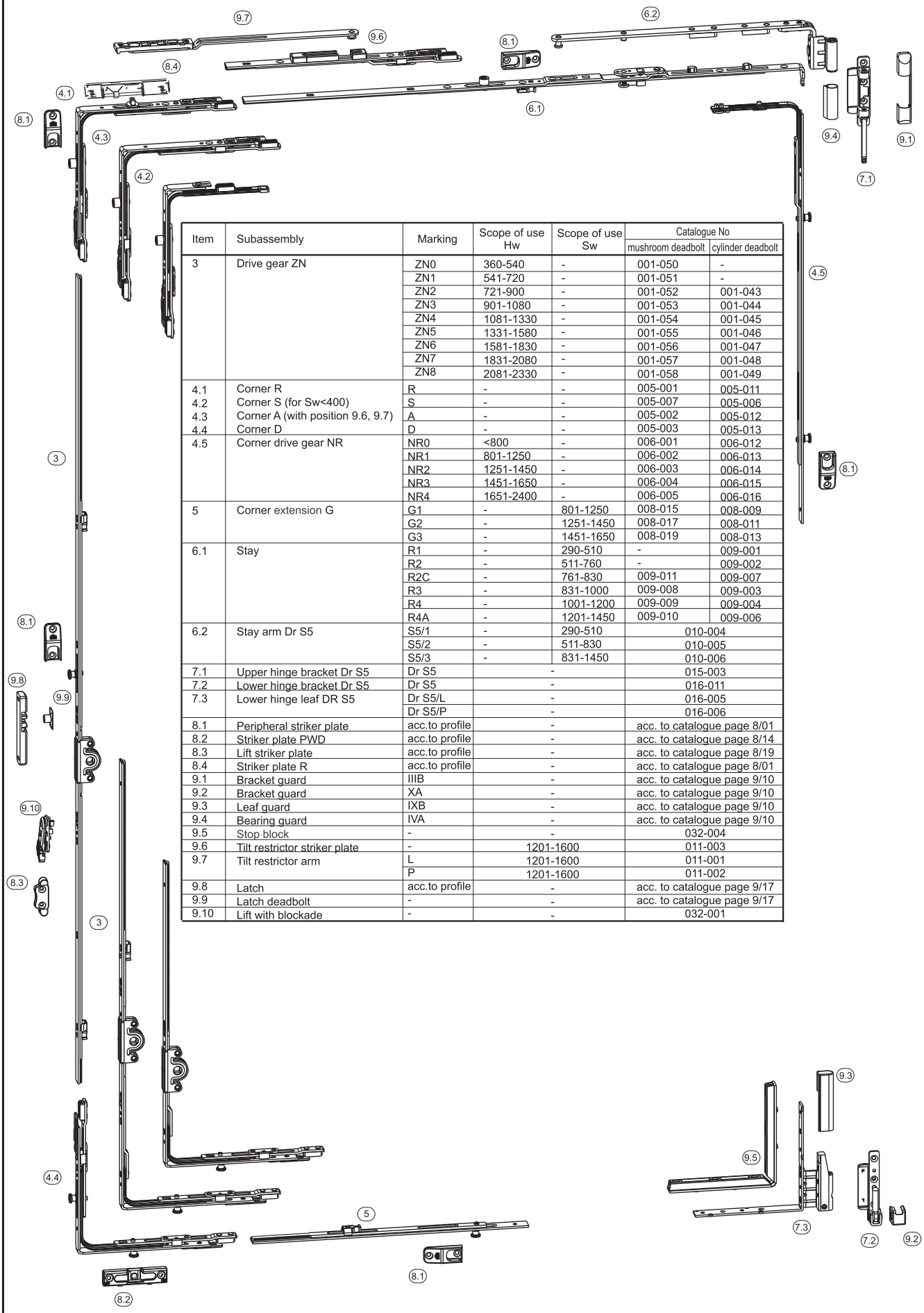

Item	Subassembly	Marking	Scope of use Hw	Scope of use Sw	Catalogue No mushroom deadbolt	Catalogue No cylinder deadbolt
3	Drive gear ZN	ZN0	360-540	-	001-050	-
		ZN1	541-720	-	001-051	-
		ZN2	721-900	-	001-052	001-043
		ZN3	901-1080	-	001-053	001-044
		ZN4	1081-1330	-	001-054	001-045
		ZN5	1331-1580	-	001-055	001-046
		ZN6	1581-1830	-	001-056	001-047
		ZN7	1831-2080	-	001-057	001-048
		ZN8	2081-2330	-	001-058	001-049
4.1	Corner R	R	-	-	005-001	005-011
4.2	Corner S (for Sw<400)	S	-	-	005-007	005-006
4.3	Corner A (with position 9.6, 9.7)	A	-	-	005-002	005-012
4.4	Corner D	D	-	-	005-003	005-013
4.5	Corner drive gear NR	NR0	<800	-	006-001	006-012
		NR1	801-1250	-	006-002	006-013
		NR2	1251-1450	-	006-003	006-014
		NR3	1451-1650	-	006-004	006-015
		NR4	1651-2400	-	006-005	006-016
5	Corner extension G	G1	-	801-1250	008-015	008-009
		G2	-	1251-1450	008-017	008-011
		G3	-	1451-1650	008-019	008-013
6.1	Stay	R1	-	290-510	-	009-001
		R2	-	511-760	-	009-002
		R2C	-	761-830	009-011	009-007
		R3	-	831-1000	009-008	009-003
		R4	-	1001-1200	009-009	009-004
		R4A	-	1201-1450	009-010	009-006
6.2	Stay arm Dr S5	S5/1	-	290-510	010-004	
		S5/2	-	511-830	010-005	
		S5/3	-	831-1450	010-006	
7.1	Upper hinge bracket Dr S5	Dr S5	-		015-003	
7.2	Lower hinge bracket Dr S5	Dr S5	-		016-011	
7.3	Lower hinge leaf DR S5	Dr S5/L	-		016-005	
		Dr S5/P	-		016-006	
8.1	Peripheral striker plate	acc.to profile	-		acc. to catalogue page 8/01	
8.2	Striker plate PWD	acc.to profile	-		acc. to catalogue page 8/14	
8.3	Lift striker plate	acc.to profile	-		acc. to catalogue page 8/19	
8.4	Striker plate R	acc.to profile	-		acc. to catalogue page 8/01	
9.1	Bracket guard	IIIB	-		acc. to catalogue page 9/10	
9.2	Bracket guard	XA	-		acc. to catalogue page 9/10	
9.3	Leaf guard	IXB	-		acc. to catalogue page 9/10	
9.4	Bearing guard	IVA	-		acc. to catalogue page 9/10	
9.5	Stop block	-	-		032-004	
9.6	Tilt restrictor striker plate	-	1201-1600		011-003	
9.7	Tilt restrictor arm	L	1201-1600		011-001	
		P	1201-1600		011-002	
9.8	Latch	acc.to profile	-		acc. to catalogue page 9/17	
9.9	Latch deadbolt	-	-		acc. to catalogue page 9/17	
9.10	Lift with blockade	-	-		032-001	

ASSEMBLING OF HARDWARE S5

DRIVE GEAR ZN
WOODEN WINDOWS, TURN / TILT VERSION RU
ASSEMBLING OF HARDWARE ELEMENTS ON THE FRAME

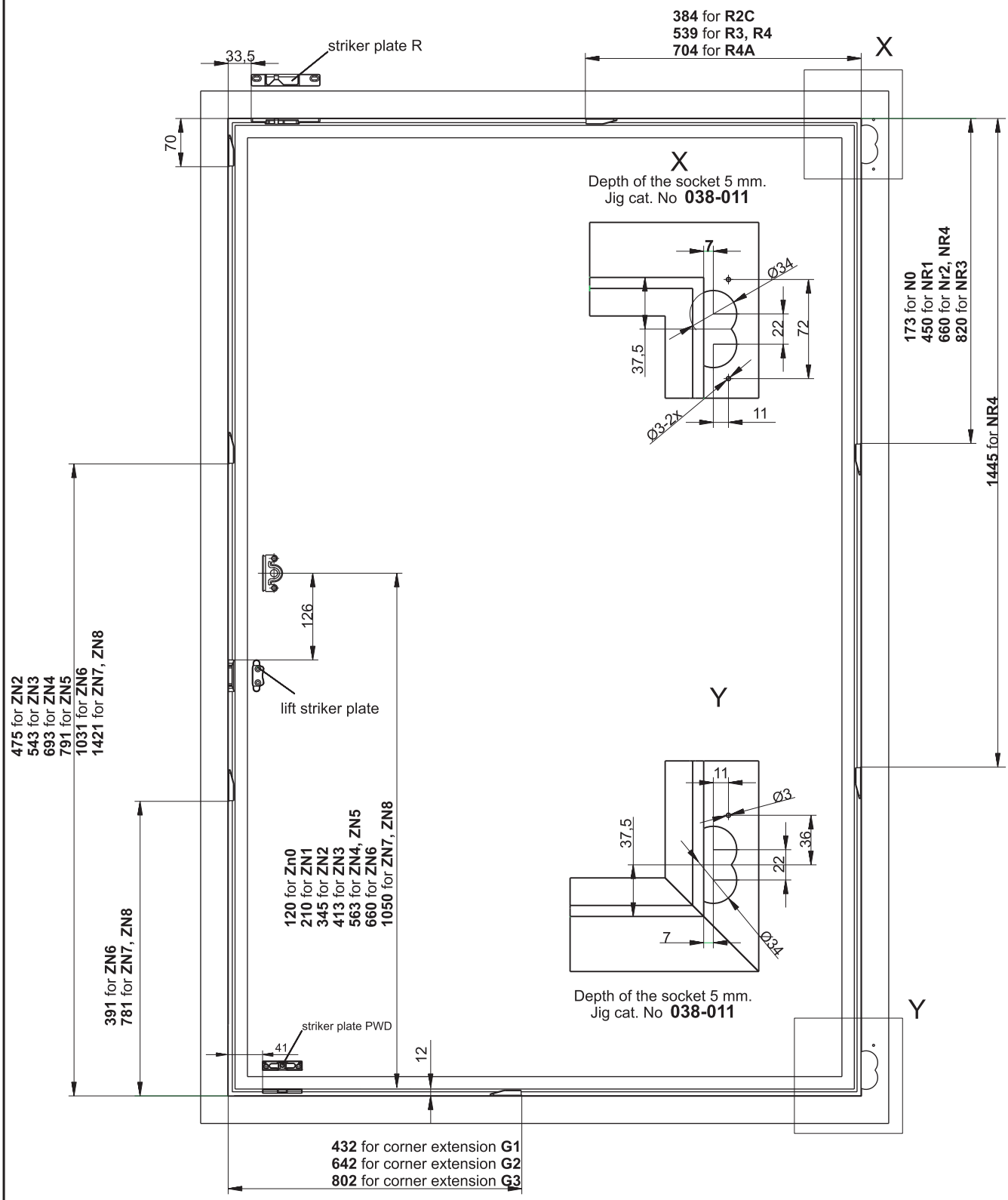

KARO

KRAJOWE AKCESORIA I ROZWIĄZANIA OKUCIOWE

ROMB SYSTEM

ASSEMBLING OF HARDWARE S5

DRIVE GEAR Z B

WOODEN WINDOWS, VERSION FOR DOUBLE WINDOWS W/O POST RU-R

LIST OF BASIC ELEMENTS

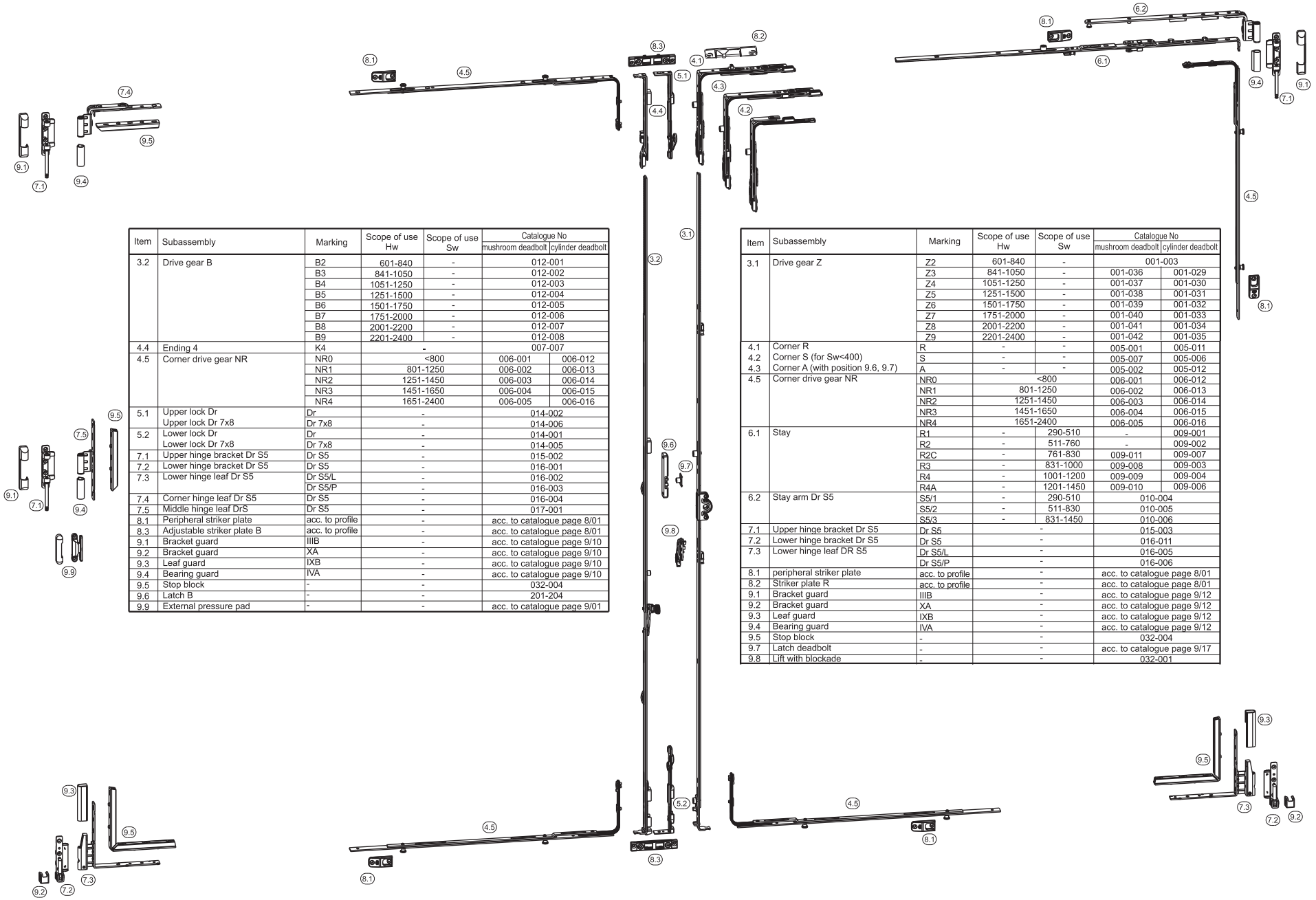

Item	Subassembly	Marking	Scope of use Hw	Scope of use Sw	Catalogue No mushroom deadbolt	Catalogue No cylinder deadbolt
3.2	Drive gear B	B2	601-840	-	012-001	
		B3	841-1050	-	012-002	
		B4	1051-1250	-	012-003	
		B5	1251-1500	-	012-004	
		B6	1501-1750	-	012-005	
		B7	1751-2000	-	012-006	
		B8	2001-2200	-	012-007	
		B9	2201-2400	-	012-008	
4.4	Ending 4	K4	-		007-007	
4.5	Corner drive gear NR	NR0	<800		006-001	006-012
		NR1	801-1250		006-002	006-013
		NR2	1251-1450		006-003	006-014
		NR3	1451-1650		006-004	006-015
		NR4	1651-2400		006-005	006-016
5.1	Upper lock Dr	Dr	-		014-002	
	Upper lock Dr 7x8	Dr 7x8	-		014-006	
5.2	Lower lock Dr	Dr	-		014-001	
	Lower lock Dr 7x8	Dr 7x8	-		014-005	
7.1	Upper hinge bracket Dr S5	Dr S5	-		015-002	
7.2	Lower hinge bracket Dr S5	Dr S5	-		016-001	
7.3	Lower hinge leaf Dr S5	Dr S5/L	-		016-002	
		Dr S5/P	-		016-003	
7.4	Corner hinge leaf Dr S5	Dr S5	-		016-004	
7.5	Middle hinge leaf DrS	Dr S5	-		017-001	
8.1	Peripheral striker plate	acc. to profile	-		acc. to catalogue page 8/01	
8.3	Adjustable striker plate B	acc. to profile	-		acc. to catalogue page 8/01	
9.1	Bracket guard	IIIB	-		acc. to catalogue page 9/10	
9.2	Bracket guard	XA	-		acc. to catalogue page 9/10	
9.3	Leaf guard	IXB	-		acc. to catalogue page 9/10	
9.4	Bearing guard	IVA	-		acc. to catalogue page 9/10	
9.5	Stop block	-	-		032-004	
9.6	Latch B	-	-		201-204	
9.9	External pressure pad	-	-		acc. to catalogue page 9/01	

Item	Subassembly	Marking	Scope of use Hw	Scope of use Sw	Catalogue No mushroom deadbolt	Catalogue No cylinder deadbolt
3.1	Drive gear Z	Z2	601-840	-	001-003	
		Z3	841-1050	-	001-036	001-029
		Z4	1051-1250	-	001-037	001-030
		Z5	1251-1500	-	001-038	001-031
		Z6	1501-1750	-	001-039	001-032
		Z7	1751-2000	-	001-040	001-033
		Z8	2001-2200	-	001-041	001-034
		Z9	2201-2400	-	001-042	001-035
4.1	Corner R	R	-	-	005-001	005-011
4.2	Corner S (for Sw<400)	S	-	-	005-007	005-006
4.3	Corner A (with position 9.6, 9.7)	A	-	-	005-002	005-012
4.5	Corner drive gear NR	NR0	<800		006-001	006-012
		NR1	801-1250		006-002	006-013
		NR2	1251-1450		006-003	006-014
		NR3	1451-1650		006-004	006-015
		NR4	1651-2400		006-005	006-016
6.1	Stay	R1	-	290-510	-	009-001
		R2	-	511-760	-	009-002
		R2C	-	761-830	009-011	009-007
		R3	-	831-1000	009-008	009-003
		R4	-	1001-1200	009-009	009-004
		R4A	-	1201-1450	009-010	009-006
6.2	Stay arm Dr S5	S5/1	-	290-510	010-004	
		S5/2	-	511-830	010-005	
		S5/3	-	831-1450	010-006	
7.1	Upper hinge bracket Dr S5	Dr S5	-		015-003	
7.2	Lower hinge bracket Dr S5	Dr S5	-		016-011	
7.3	Lower hinge leaf DR S5	Dr S5/L	-		016-005	
		Dr S5/P	-		016-006	
8.1	peripheral striker plate	acc. to profile	-		acc. to catalogue page 8/01	
8.2	Striker plate R	acc. to profile	-		acc. to catalogue page 8/01	
9.1	Bracket guard	IIIB	-		acc. to catalogue page 9/12	
9.2	Bracket guard	XA	-		acc. to catalogue page 9/12	
9.3	Leaf guard	IXB	-		acc. to catalogue page 9/12	
9.4	Bearing guard	IVA	-		acc. to catalogue page 9/12	
9.5	Stop block	-	-		032-004	
9.7	Latch deadbolt	-	-		acc. to catalogue page 9/17	
9.8	Lift with blockade	-	-		032-001	

ASSEMBLING OF HARDWARE S5

DRIVE GEAR Z B
WOODEN WINDOWS, VERSION FOR DOUBLE WINDOWS W/O POST RU-R
ASSEMBLING OF HARDWARE ELEMENTS IN THE FRAME

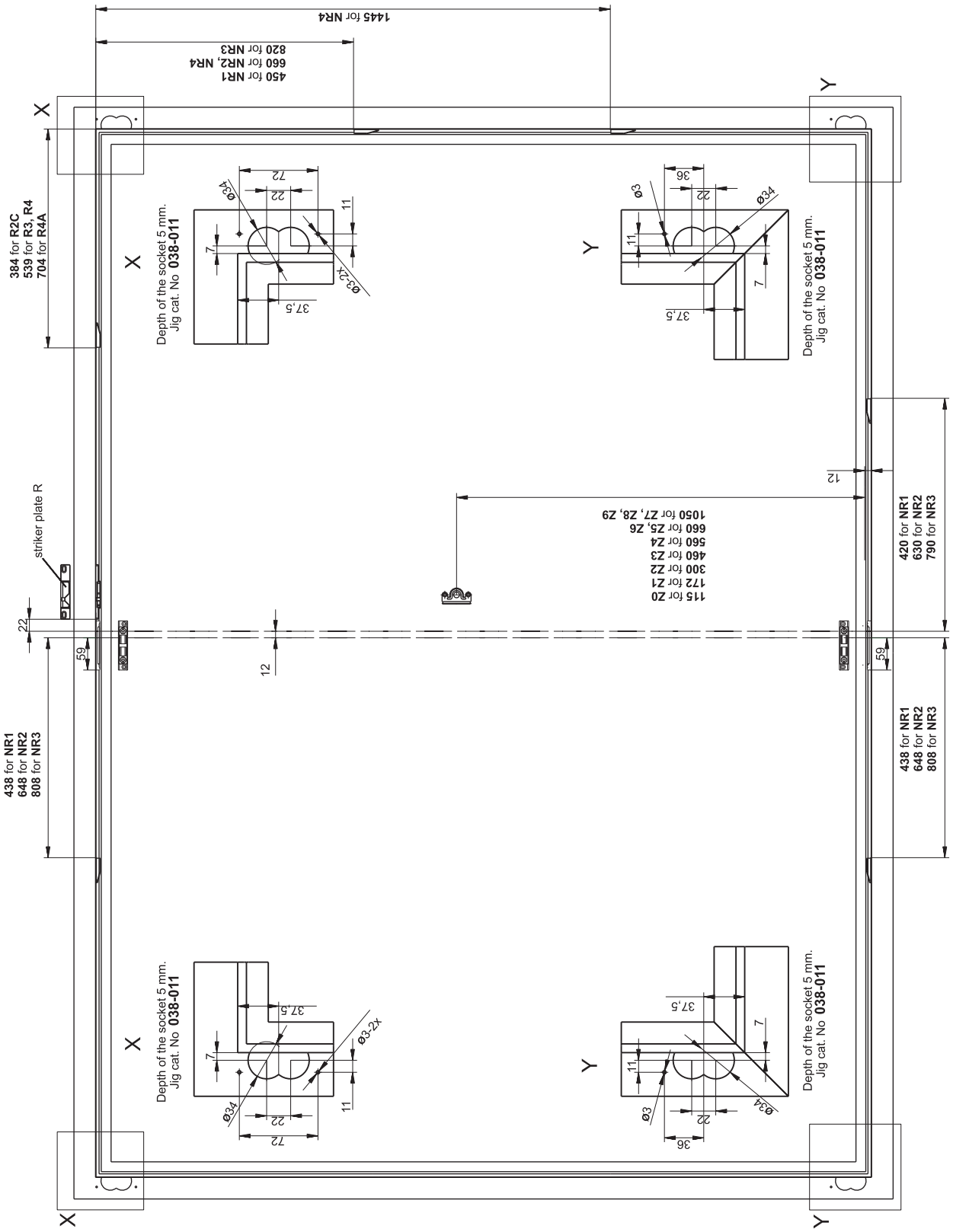

KARO

KRAJOWE AKCESORIA I ROZWIĄZANIA OKUCIOWE

ROMB SYSTEM

ASSEMBLING OF HARDWARE S5

DRIVE GEAR ZN BZ

WOODEN WINDOWS, VERSION FOR DOUBLE WINDOWS W/O POST RU-R

LIST OF BASIC SUBASSEMBLIES

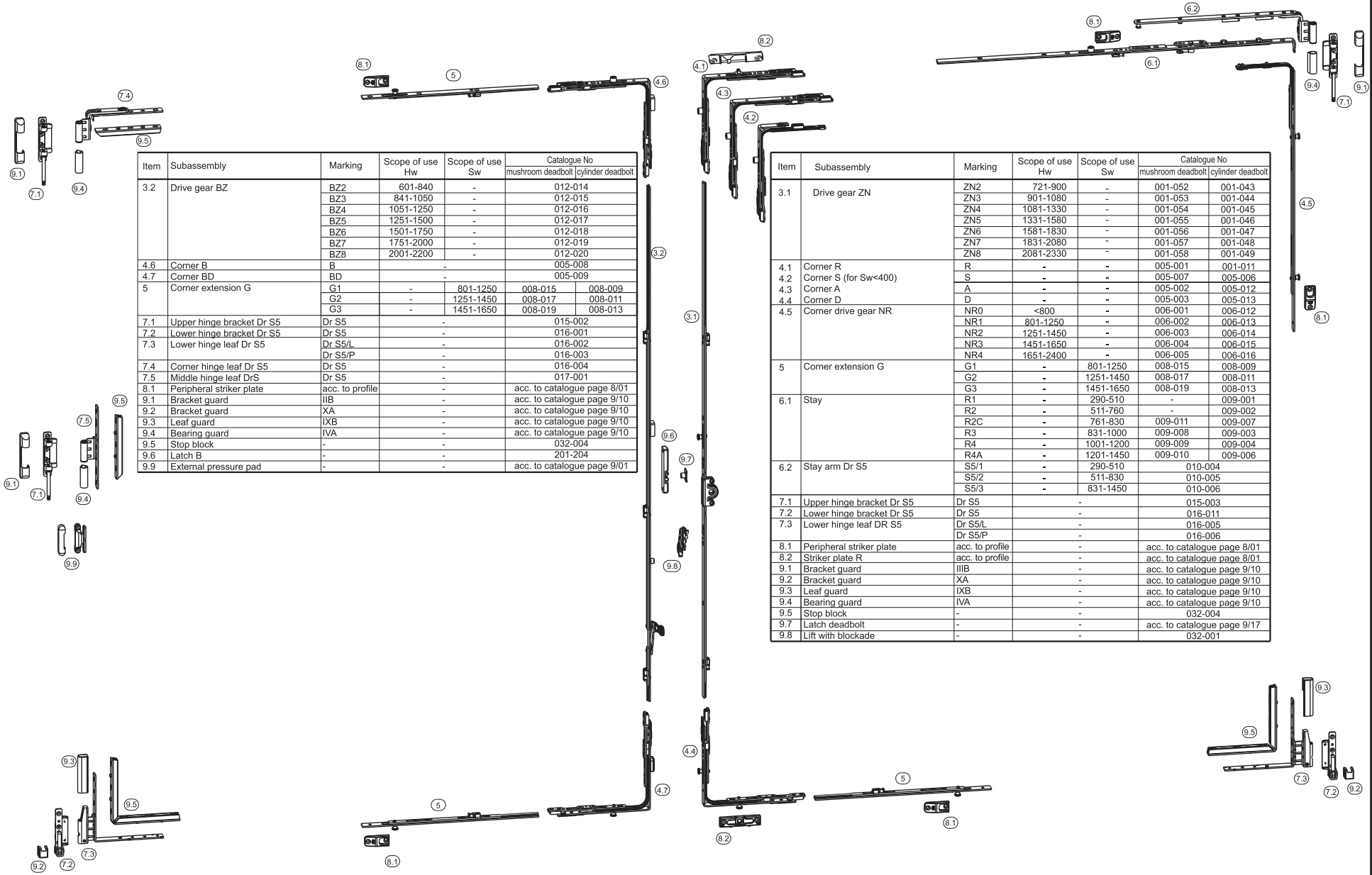

Item	Subassembly	Marking	Scope of use Hw	Scope of use Sw	Catalogue No mushroom deadbolt	Catalogue No cylinder deadbolt
3.1	Drive gear ZN	ZN2	721-900	-	001-052	001-043
		ZN3	901-1080	-	001-053	001-044
		ZN4	1081-1330	-	001-054	001-045
		ZN5	1331-1580	-	001-055	001-046
		ZN6	1581-1830	-	001-056	001-047
		ZN7	1831-2080	-	001-057	001-048
		ZN8	2081-2330	-	001-058	001-049
4.1	Corner R	R	-	-	005-001	001-011
4.2	Corner S (for Sw<400)	S	-	-	005-007	005-006
4.3	Corner A	A	-	-	005-002	005-012
4.4	Corner D	D	-	-	005-003	005-013
4.5	Corner drive gear NR	NR0	<800	-	006-001	006-012
		NR1	801-1250	-	006-002	006-013
		NR2	1251-1450	-	006-003	006-014
		NR3	1451-1650	-	006-004	006-015
		NR4	1651-2400	-	006-005	006-016
5	Corner extension G	G1	-	801-1250	008-015	008-009
		G2	-	1251-1450	008-017	008-011
		G3	-	1451-1650	008-019	008-013
6.1	Stay	R1	-	290-510	-	009-001
		R2	-	511-760	-	009-002
		R2C	-	761-830	009-011	009-007
		R3	-	831-1000	009-008	009-003
		R4	-	1001-1200	009-009	009-004
		R4A	-	1201-1450	009-010	009-006
6.2	Stay arm Dr S5	S5/1	-	290-510	010-004	
		S5/2	-	511-830	010-005	
		S5/3	-	831-1450	010-006	
7.1	Upper hinge bracket Dr S5	Dr S5	-		015-003	
7.2	Lower hinge bracket Dr S5	Dr S5	-		016-011	
7.3	Lower hinge leaf DR S5	Dr S5/L	-		016-005	
		Dr S5/P	-		016-006	
8.1	Peripheral striker plate	acc. to profile	-		acc. to catalogue page 8/01	
8.2	Striker plate R	acc. to profile	-		acc. to catalogue page 8/01	
9.1	Bracket guard	IIIB	-		acc. to catalogue page 9/10	
9.2	Bracket guard	XA	-		acc. to catalogue page 9/10	
9.3	Leaf guard	IXB	-		acc. to catalogue page 9/10	
9.4	Bearing guard	IVA	-		acc. to catalogue page 9/10	
9.5	Stop block	-	-		032-004	
9.7	Latch deadbolt	-	-		acc. to catalogue page 9/17	
9.8	Lift with blockade	-	-		032-001	

Item	Subassembly	Marking	Scope of use Hw	Scope of use Sw	Catalogue No mushroom deadbolt	Catalogue No cylinder deadbolt
3.2	Drive gear BZ	BZ2	601-840	-	012-014	
		BZ3	841-1050	-	012-015	
		BZ4	1051-1250	-	012-016	
		BZ5	1251-1500	-	012-017	
		BZ6	1501-1750	-	012-018	
		BZ7	1751-2000	-	012-019	
		BZ8	2001-2200	-	012-020	
4.6	Corner B	B	-		005-008	
4.7	Corner BD	BD	-		005-009	
5	Corner extension G	G1	-	801-1250	008-015	008-009
		G2	-	1251-1450	008-017	008-011
		G3	-	1451-1650	008-019	008-013
7.1	Upper hinge bracket Dr S5	Dr S5	-		015-002	
7.2	Lower hinge bracket Dr S5	Dr S5	-		016-001	
7.3	Lower hinge leaf Dr S5	Dr S5/L	-		016-002	
		Dr S5/P	-		016-003	
7.4	Corner hinge leaf Dr S5	Dr S5	-		016-004	
7.5	Middle hinge leaf DrS	Dr S5	-		017-001	
8.1	Peripheral striker plate	acc. to profile	-		acc. to catalogue page 8/01	
9.1	Bracket guard	IIB	-		acc. to catalogue page 9/10	
9.2	Bracket guard	XA	-		acc. to catalogue page 9/10	
9.3	Leaf guard	IXB	-		acc. to catalogue page 9/10	
9.4	Bearing guard	IVA	-		acc. to catalogue page 9/10	
9.5	Stop block	-	-		032-004	
9.6	Latch B	-	-		201-204	
9.9	External pressure pad	-	-		acc. to catalogue page 9/01	

ASSEMBLING OF HARDWARE S5

DRIVE GEAR Z B

WOODEN WINDOWS, VERSION FOR DOUBLE WINDOWS W/O POST RU-

ASSEMBLING OF HARDWARE ELEMENTS IN THE FRAME

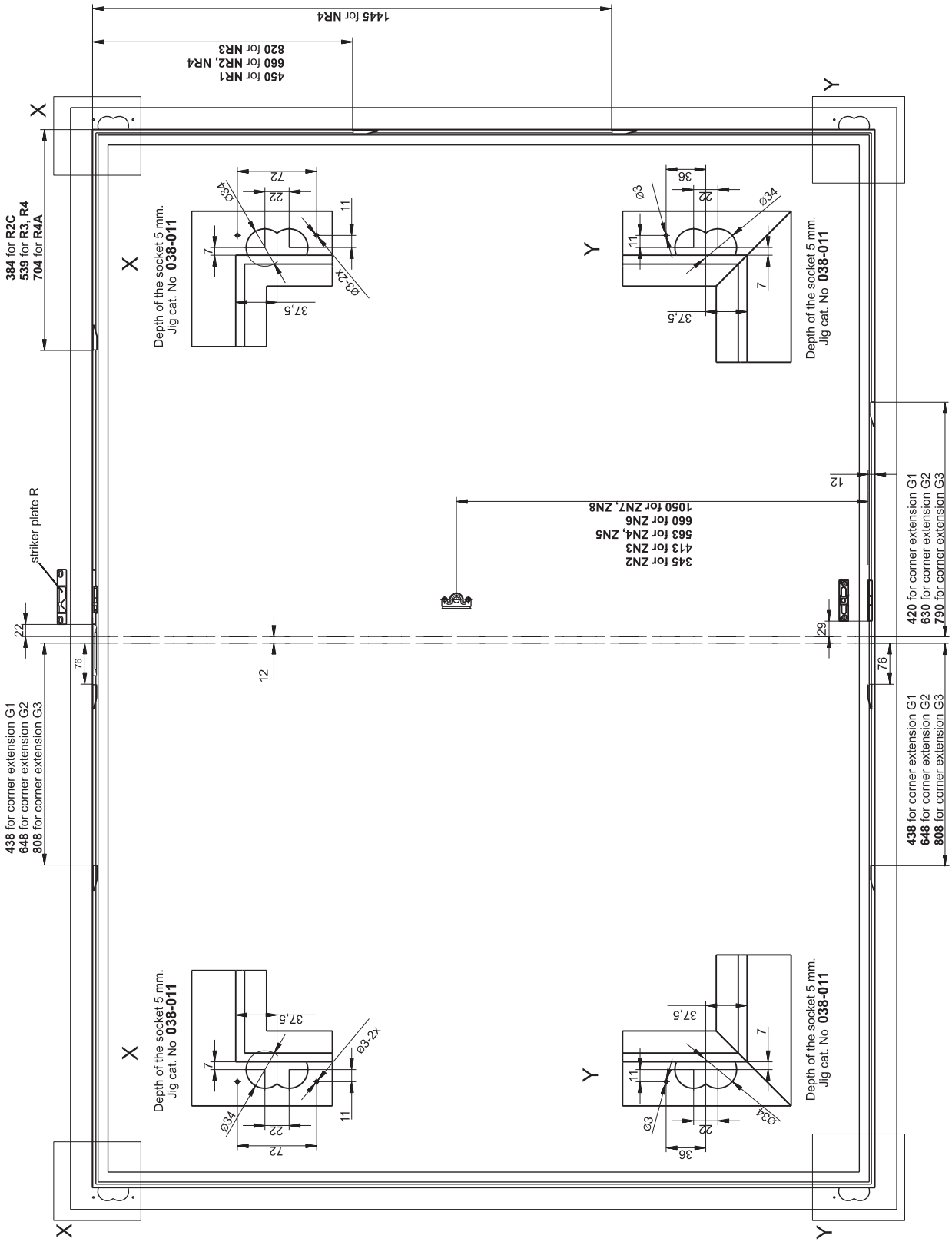

ASSEMBLING OF HARDWARE S5

DRIVE GEAR Z
WOODEN WINDOWS, TURN VERSION R
LIST OF BASIC SUBASSEMBLIES

Item	Subassembly	Marking	Scope of use Hw	Scope of use Sw	Catalogue No	
					mushroom deadbolt	cylinder deadbolt
3	Drive gear Z	Z0	360-540	-	001-001	
		Z1	541-600	-	001-002	
		Z2	601-840	-	001-003	
		Z3	841-1050	-	001-036	001-029
		Z4	1051-1250	-	001-037	001-030
		Z5	1251-1500	-	001-038	001-031
		Z6	1501-1750	-	001-039	001-032
		Z7	1751-2000	-	001-040	001-033
		Z8	2001-2200	-	001-041	001-034
		Z9	2201-2400	-	001-042	001-035
4.1	End 1	K1	-	-	007-010	007-001
4.2	Corner drive gear NR	NR1	-	801-1250	006-002	006-013
		NR2	-	1251-1450	006-003	006-014
		NR3	-	1451-1650	006-004	006-015
7.1	Upper hinge bracket Dr S5	Dr S5	-		015-003	
7.2	Lower hinge bracket Dr S5	Dr S5	-		016-011	
7.3	Lower hinge leaf Dr S5	Dr S5/L	-		016-005	
		Dr S5/P	-		016-006	
7.4	Corner hinge leaf Dr S5	Dr S5	-		017-002	
7.5	Middle hinge leaf DrS5	Dr S5	-		019-009	
8.1	Peripheral striker plate	acc. to profile	-		acc. to catalogue page 8/01	
8.2	Lift striker plate	acc. to profile	-		acc. to catalogue page 8/19	
9.1	Bracket guard	IIIB	-		acc. to catalogue page 9/10	
9.2	Bracket guard	XA	-		acc. to catalogue page 9/10	
9.3	Leaf guard	IXB	-		acc. to catalogue page 9/10	
9.4	Bearing guard	IVA	-		acc. to catalogue page 9/10	
9.5	Stop block	-	-		032-004	
9.6	external pressure pad	-	-		acc. to catalogue page 9/01	
9.7	Latch	acc. to profile	-		acc. to catalogue page 9/17	
9.8	Latch deadbolt	-	-		acc. to catalogue page 9/17	
9.9	Lift with blockade	-	-		032-001	

ASSEMBLING OF HARDWARE S5

DRIVE GEAR Z
WOODEN WINDOWS, VERSION FOR TURN WINDOWS R
ASSEMBLING OF HARDWARE ELEMENTS IN THE FRAME

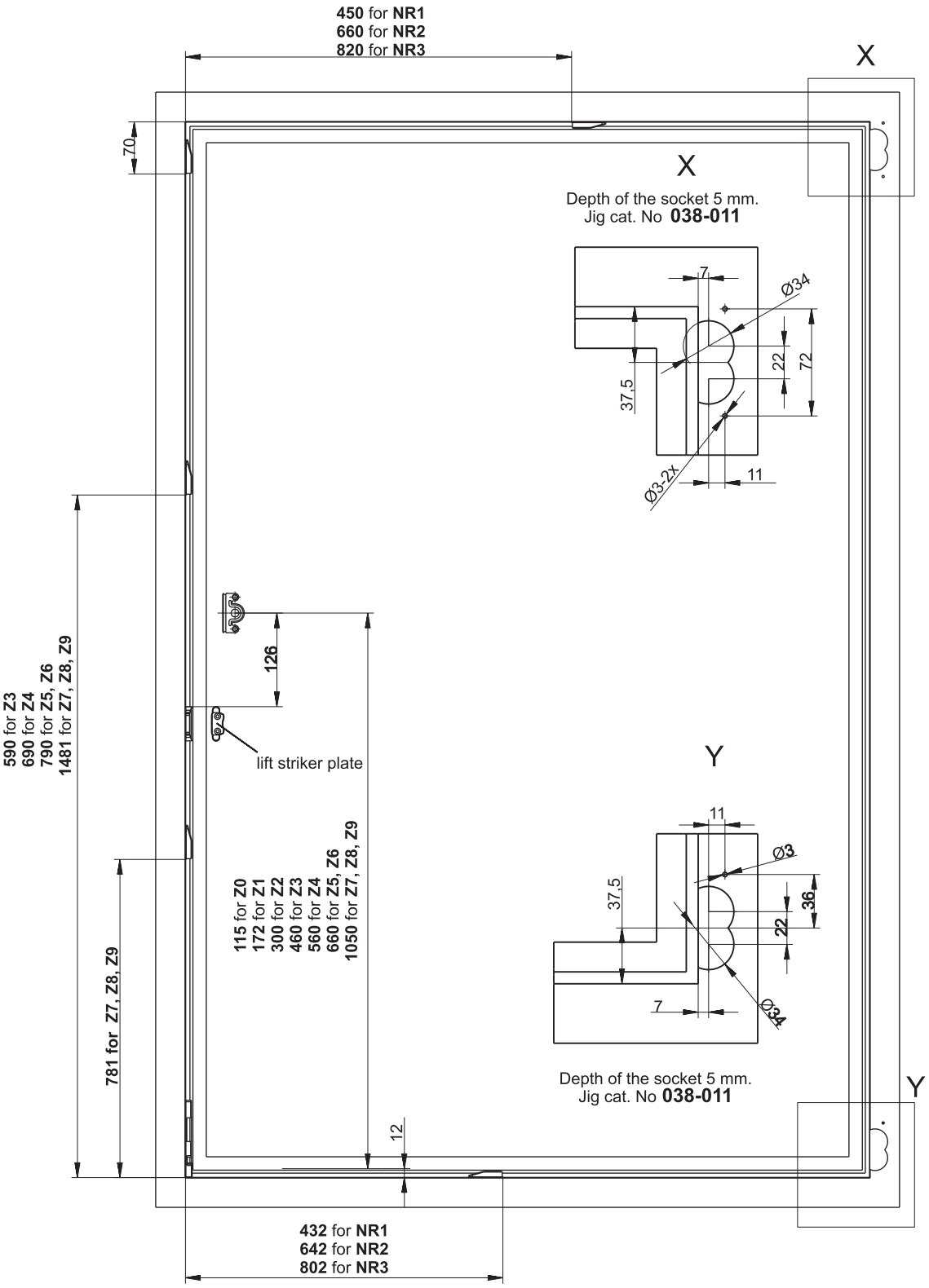

KARO KRAJOWE AKCESORIA I ROZWIĄZANIA OKUCIOWE

ROMB SYSTEM

ASSEMBLING OF HARDWARE S5

DRIVE GEAR ZN
WOODEN WINDOWS, TURN VERSION R
LIST OF BASIC SUBASSEMBLIES

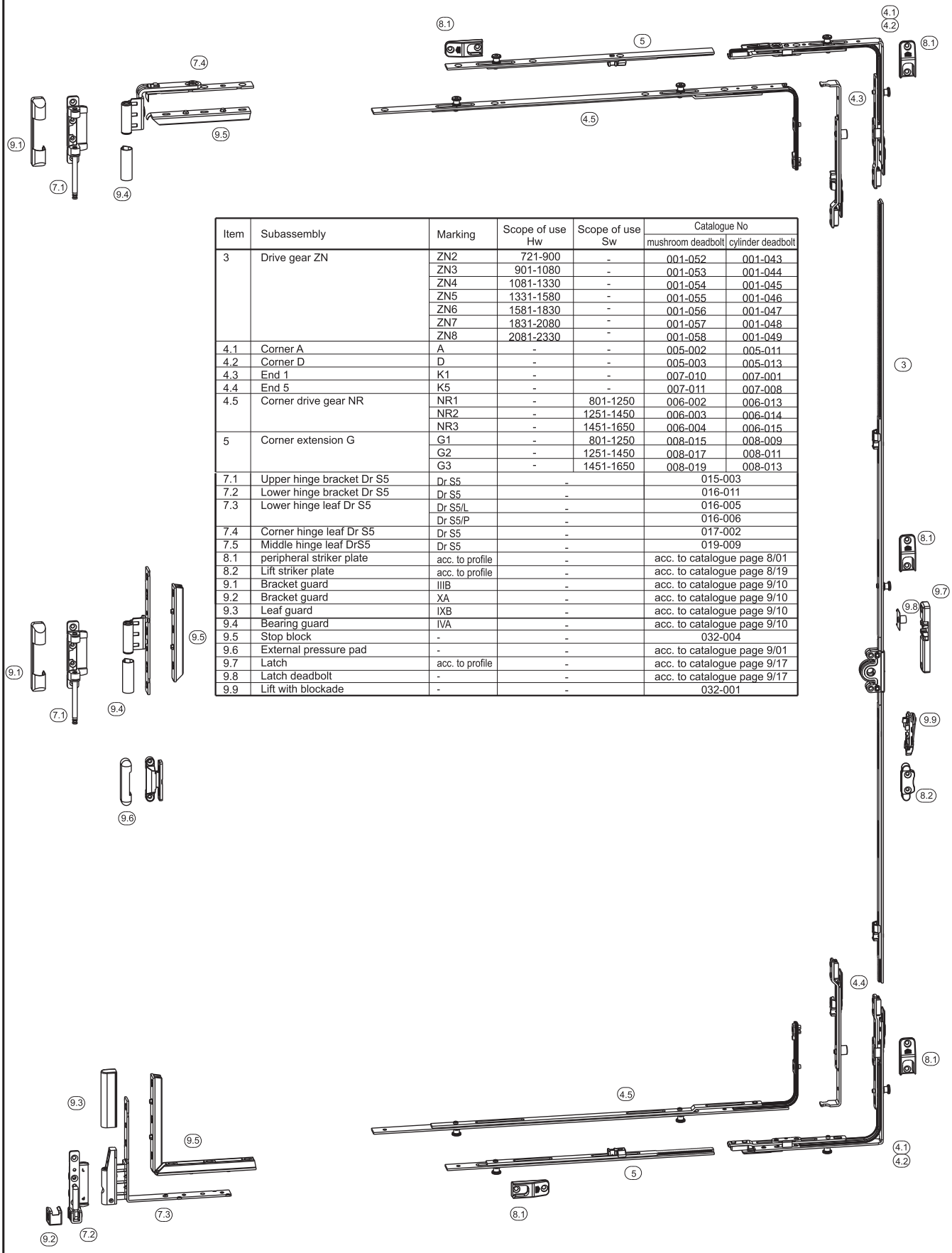

Item	Subassembly	Marking	Scope of use Hw	Scope of use Sw	Catalogue No	
					mushroom deadbolt	cylinder deadbolt
3	Drive gear ZN	ZN2	721-900	-	001-052	001-043
		ZN3	901-1080	-	001-053	001-044
		ZN4	1081-1330	-	001-054	001-045
		ZN5	1331-1580	-	001-055	001-046
		ZN6	1581-1830	-	001-056	001-047
		ZN7	1831-2080	-	001-057	001-048
		ZN8	2081-2330	-	001-058	001-049
4.1	Corner A	A	-	-	005-002	005-011
4.2	Corner D	D	-	-	005-003	005-013
4.3	End 1	K1	-	-	007-010	007-001
4.4	End 5	K5	-	-	007-011	007-008
4.5	Corner drive gear NR	NR1	-	801-1250	006-002	006-013
		NR2	-	1251-1450	006-003	006-014
		NR3	-	1451-1650	006-004	006-015
5	Corner extension G	G1	-	801-1250	008-015	008-009
		G2	-	1251-1450	008-017	008-011
		G3	-	1451-1650	008-019	008-013
7.1	Upper hinge bracket Dr S5	Dr S5	-		015-003	
7.2	Lower hinge bracket Dr S5	Dr S5	-		016-011	
7.3	Lower hinge leaf Dr S5	Dr S5/L	-		016-005	
		Dr S5/P	-		016-006	
7.4	Corner hinge leaf Dr S5	Dr S5	-		017-002	
7.5	Middle hinge leaf DrS5	Dr S5	-		019-009	
8.1	peripheral striker plate	acc. to profile	-		acc. to catalogue page 8/01	
8.2	Lift striker plate	acc. to profile	-		acc. to catalogue page 8/19	
9.1	Bracket guard	IIIB	-		acc. to catalogue page 9/10	
9.2	Bracket guard	XA	-		acc. to catalogue page 9/10	
9.3	Leaf guard	IXB	-		acc. to catalogue page 9/10	
9.4	Bearing guard	IVA	-		acc. to catalogue page 9/10	
9.5	Stop block	-	-		032-004	
9.6	External pressure pad	-	-		acc. to catalogue page 9/01	
9.7	Latch	acc. to profile	-		acc. to catalogue page 9/17	
9.8	Latch deadbolt	-	-		acc. to catalogue page 9/17	
9.9	Lift with blockade	-	-		032-001	

ASSEMBLING OF HARDWARE S5

DRIVE GEAR ZN
WOODEN WINDOWS, VERSION FOR TURN WINDOWS R
ASSEMBLING OF HARDWARE ELEMENTS IN THE FRAME

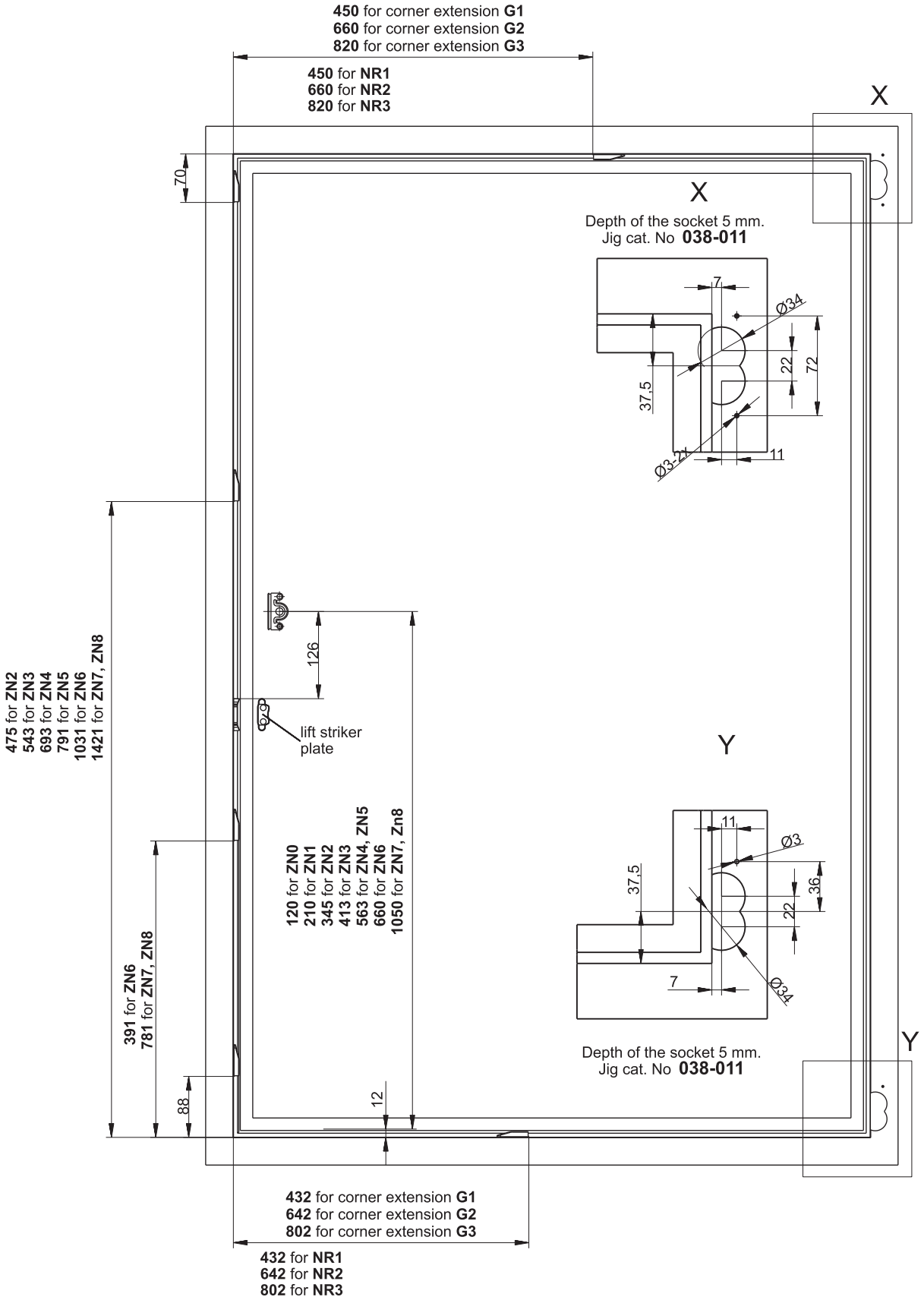

ASSEMBLING OF HARDWARE S5

DRIVE GEAR ZNR
WOODEN WINDOWS, TURN VERSION R
LIST OF BASIC SUBASSEMBLIES

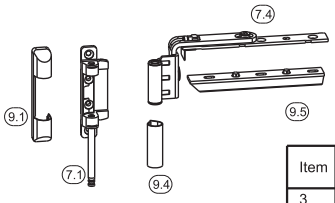

Item	Subassembly	Marking	Scope of use Hw	Scope of use Sw	Catalogue No	
					mushroom deadbolt	cylinder deadbolt
3	Drive gear ZNR	ZNR0	265-540	-	001-068	001-059
		ZNR1	541-720	-	001-069	001-060
		ZNR2	721-900	-	001-070	001-061
		ZNR3	901-1080	-	001-071	001-062
		ZNR4	1081-1330	-	001-072	001-063
		ZNR5	1331-1580	-	001-073	001-064
		ZNR6	1581-1830	-	001-074	001-065
		ZNR7	1831-2080	-	001-075	001-066
		ZNR8	2081-2330	-	001-076	001-067
7.1	Upper hinge bracket Dr S5	Dr S5	-		015-003	
7.2	Lower hinge bracket Dr S5	Dr S5	-		016-011	
7.3	Lower hinge leaf Dr S5	Dr S5/L	-		016-005	
		Dr S5/P	-		016-006	
7.4	Corner hinge leaf Dr S5	Dr S5	-		017-002	
7.5	Middle hinge leaf DrS5	Dr S5	-		019-009	
8.1	Peripheral striker plate	acc. to profile	-		acc. to catalogue page 8/01	
8.2	Lift striker plate	acc. to profile	-		acc. to catalogue page 8/19	
9.1	Bracket guard	IIIB	-		acc. to catalogue page 9/10	
9.2	Bracket guard	XA	-		acc. to catalogue page 9/10	
9.3	Leaf guard	IXB	-		acc. to catalogue page 9/10	
9.4	Bearing guard	IVA	-		acc. to catalogue page 9/10	
9.5	Stop block	-	-		032-004	
9.6	External pressure pad	-	-		acc. to catalogue page 9/01	
9.7	Latch	acc. to profile	-		acc. to catalogue page 9/17	
9.8	Latch deadbolt	-	-		acc. to catalogue page 9/17	
9.9	Lift with blockade	-	-		032-001	

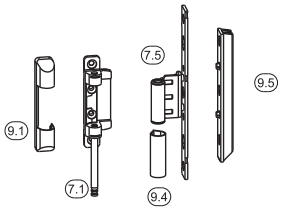

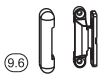

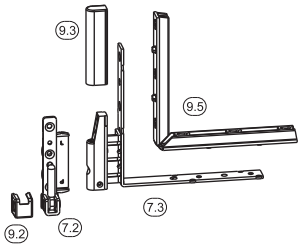

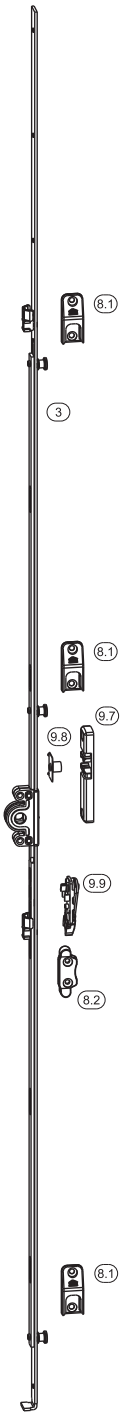

ASSEMBLING OF HARDWARE S5

DRIVE GEAR ZNR
WOODEN WINDOWS, VERSION FOR TURN WINDOWS R
ASSEMBLING OF HARDWARE ELEMENTS IN THE FRAME

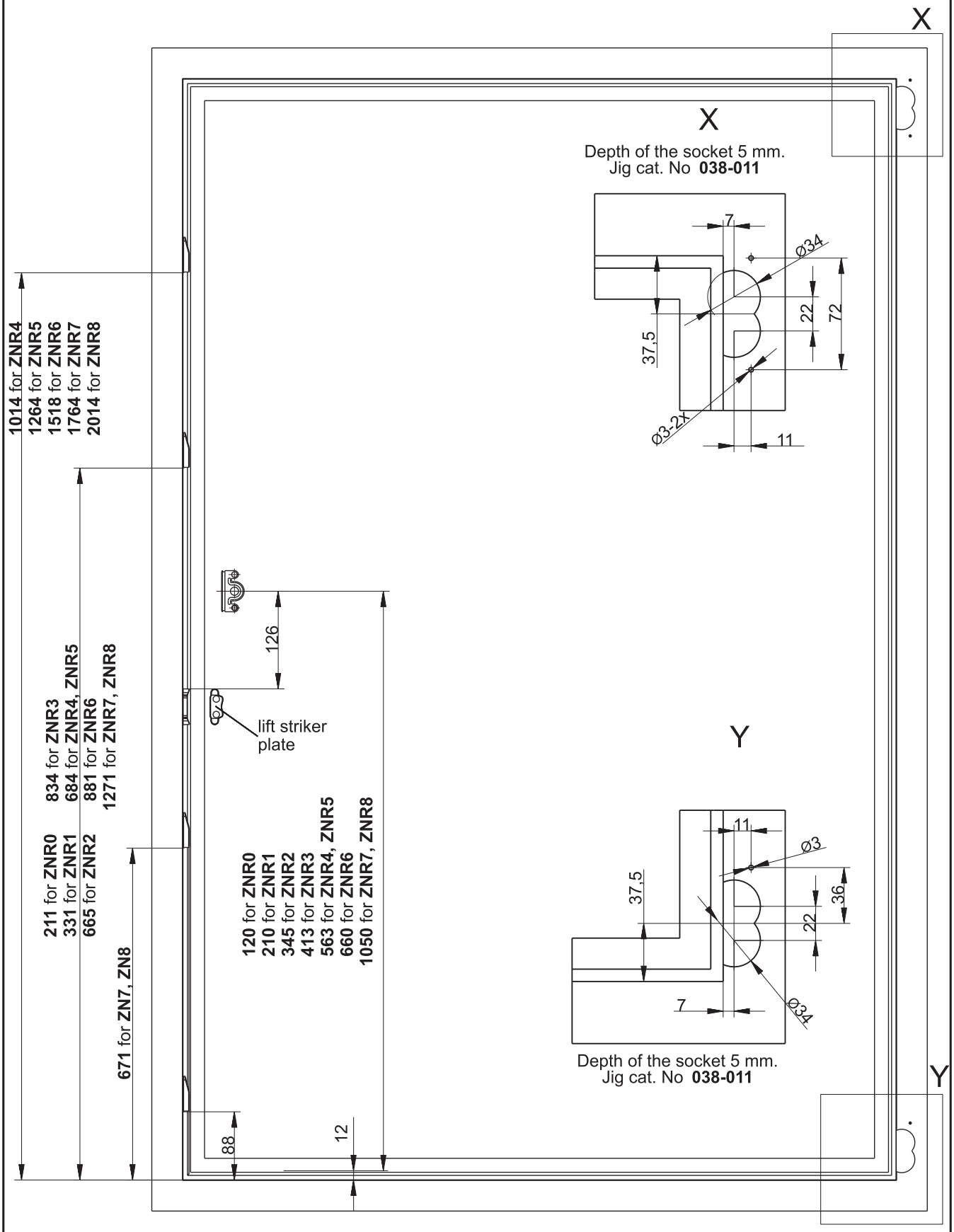

ASSEMBLING OF HARDWARE S5

DRIVE GEAR S SR
WOODEN WINDOWS, TURN VERSION R
LIST OF BASIC SUBASSEMBLIES

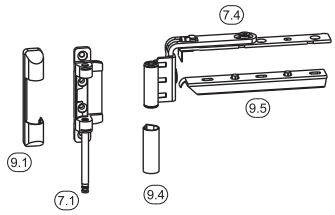

Item	Subassembly	Marking	Scope of use Hw	Scope of use Sw	Catalogue No	
					mushroom deadbolt	cylinder deadbolt
3.1	Drive gear S	S00	<340	-	004-005	004-001
		S01	341-540	-	004-006	004-002
		S02	541-730	-	004-007	004-003
		S03	731-990	-	004-008	004-004
		S1A	991-1250	-	004-013	004-009
		S2	1251-1450	-	004-014	004-010
		S3	1451-1900	-	004-015	004-011
		S4	1901-2400	-	004-016	004-012
3.2	Drive gear SR	SR1A	991-1250	-	004-021	004-017
		SR2	1251-1450	-	004-022	004-018
		SR3	1451-1900	-	004-023	004-019
		SR4	1901-2400	-	004-024	004-020
7.1	Upper hinge bracket Dr S5	Dr S5	-		015-003	
7.2	Lower hinge bracket Dr S5	Dr S5	-		016-011	
7.3	Lower hinge leaf Dr S5	Dr S5/L	-		016-005	
		Dr S5/P	-		016-006	
7.4	Corner hinge leaf Dr S5	Dr S5	-		017-002	
7.5	Middle hinge leaf DrS5	Dr S5	-		019-009	
8.1	Peripheral striker plate	acc. to profile	-		acc. to catalogue page 8/01	
8.2	Lift striker plate	acc. to profile	-		acc. to catalogue page 8/19	
9.1	Bracket guard	IIIB	-		acc. to catalogue page 9/10	
9.2	Bracket guard	XA	-		acc. to catalogue page 9/10	
9.3	Leaf guard	IXB	-		acc. to catalogue page 9/10	
9.4	Bearing guard	IVA	-		acc. to catalogue page 9/10	
9.5	Stop block	-	-		032-004	
9.6	External pressure pad	-	-		acc. to catalogue page 9/01	
9.7	Latch	acc. to profile	-		acc. to catalogue page 9/17	
9.8	Latch deadbolt	-	-		acc. to catalogue page 9/17	
9.9	Lift with blockade	-	-		032-001	

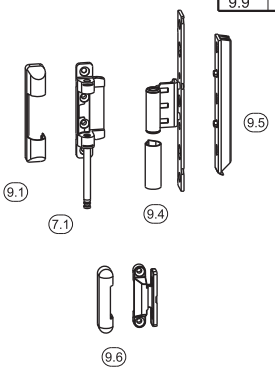

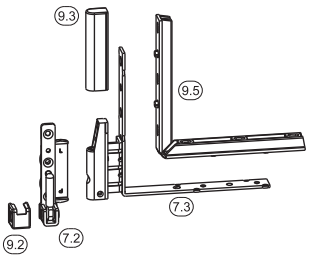

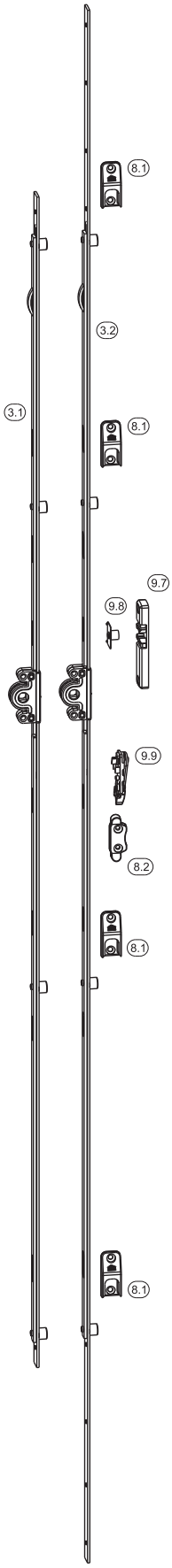

ASSEMBLING OF HARDWARE S5

DRIVE GEAR S SR
WOODEN WINDOW, VERSION FOR TURN WINDOWS R
ASSEMBLING OF HARDWARE ELEMENTS IN THE FRAME

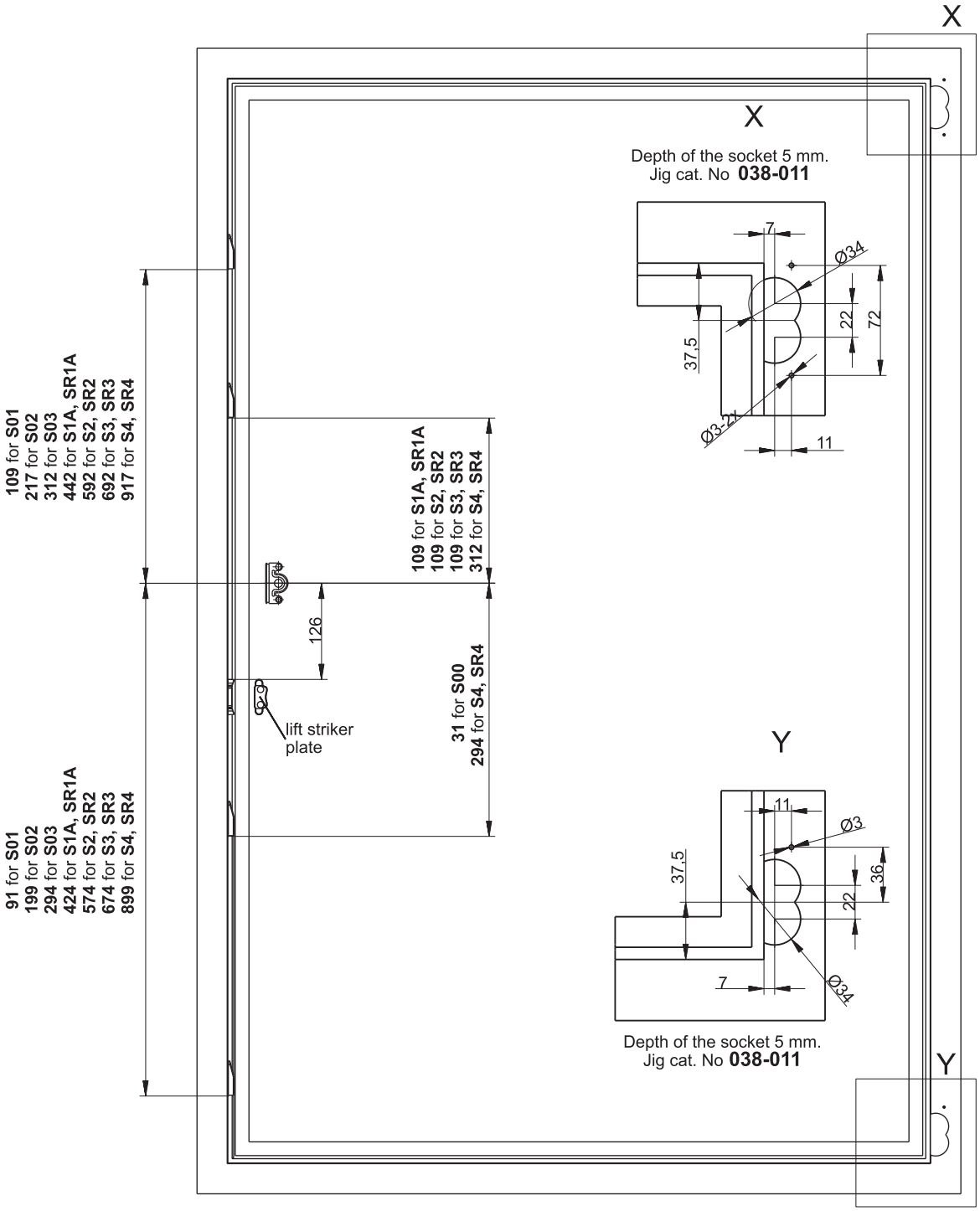

ASSEMBLING OF HARDWARE DrC

DRIVE GEAR Z ZN
WOODEN WINDOWS, TURN / TILT VERSION RU
LIST OF BASIC SUBASSEMBLIES

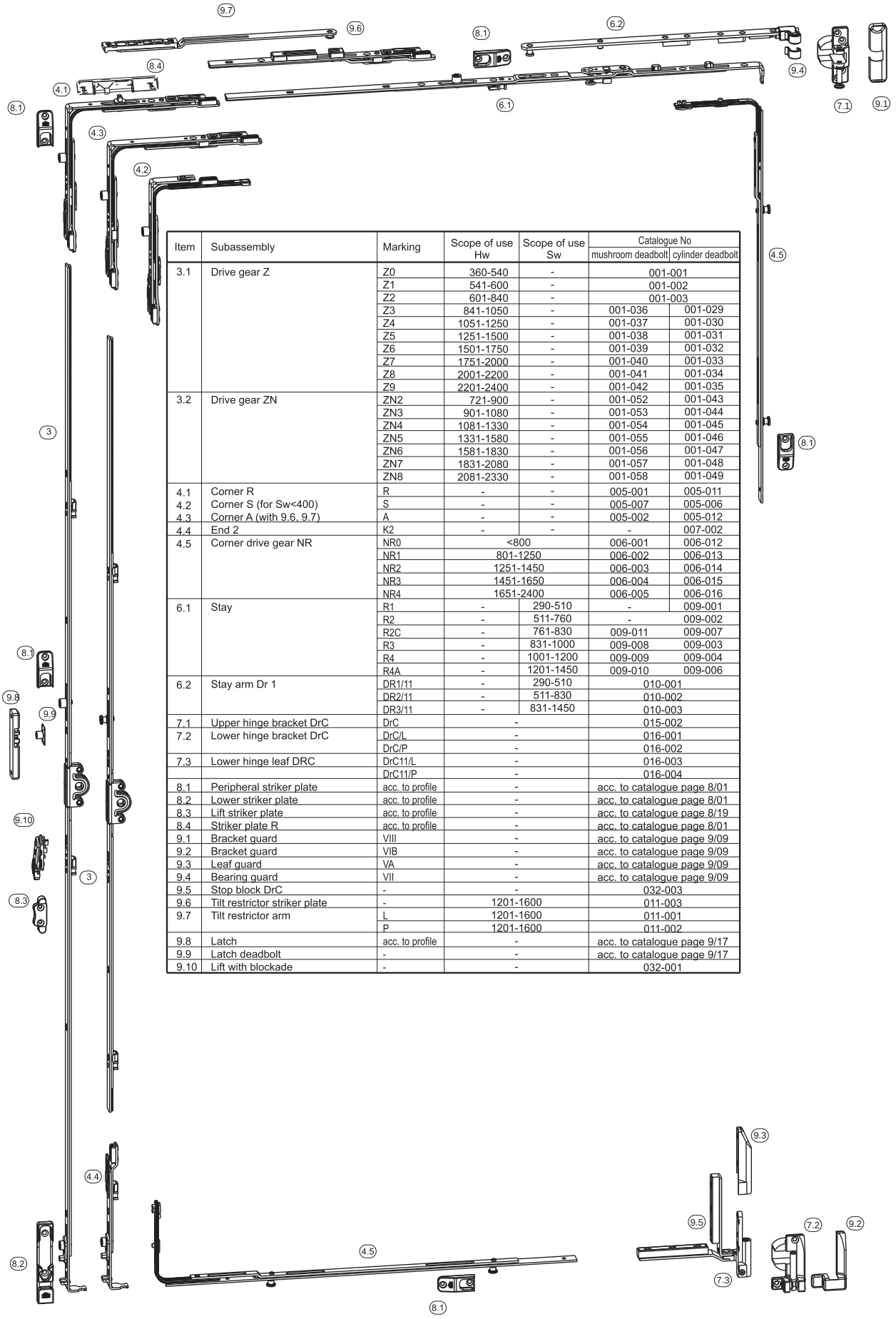

Item	Subassembly	Marking	Scope of use Hw	Scope of use Sw	Catalogue No mushroom deadbolt	Catalogue No cylinder deadbolt
3.1	Drive gear Z	Z0	360-540	-	001-001	
		Z1	541-600	-	001-002	
		Z2	601-840	-	001-003	
		Z3	841-1050	-	001-036	001-029
		Z4	1051-1250	-	001-037	001-030
		Z5	1251-1500	-	001-038	001-031
		Z6	1501-1750	-	001-039	001-032
		Z7	1751-2000	-	001-040	001-033
		Z8	2001-2200	-	001-041	001-034
		Z9	2201-2400	-	001-042	001-035
3.2	Drive gear ZN	ZN2	721-900	-	001-052	001-043
		ZN3	901-1080	-	001-053	001-044
		ZN4	1081-1330	-	001-054	001-045
		ZN5	1331-1580	-	001-055	001-046
		ZN6	1581-1830	-	001-056	001-047
		ZN7	1831-2080	-	001-057	001-048
		ZN8	2081-2330	-	001-058	001-049
4.1	Corner R	R	-	-	005-001	005-011
4.2	Corner S (for Sw<400)	S	-	-	005-007	005-006
4.3	Corner A (with 9.6, 9.7)	A	-	-	005-002	005-012
4.4	End 2	K2	-	-	-	007-002
4.5	Corner drive gear NR	NR0	<800		006-001	006-012
		NR1	801-1250		006-002	006-013
		NR2	1251-1450		006-003	006-014
		NR3	1451-1650		006-004	006-015
		NR4	1651-2400		006-005	006-016
6.1	Stay	R1	-	290-510	-	009-001
		R2	-	511-760	-	009-002
		R2C	-	761-830	009-011	009-007
		R3	-	831-1000	009-008	009-003
		R4	-	1001-1200	009-009	009-004
		R4A	-	1201-1450	009-010	009-006
6.2	Stay arm Dr 1	DR1/11	-	290-510	010-001	
		DR2/11	-	511-830	010-002	
		DR3/11	-	831-1450	010-003	
7.1	Upper hinge bracket DrC	DrC	-		015-002	
7.2	Lower hinge bracket DrC	DrC/L	-		016-001	
		DrC/P	-		016-002	
7.3	Lower hinge leaf DRC	DrC11/L	-		016-003	
		DrC11/P	-		016-004	
8.1	Peripheral striker plate	acc. to profile	-		acc. to catalogue page 8/01	
8.2	Lower striker plate	acc. to profile	-		acc. to catalogue page 8/01	
8.3	Lift striker plate	acc. to profile	-		acc. to catalogue page 8/19	
8.4	Striker plate R	acc. to profile	-		acc. to catalogue page 8/01	
9.1	Bracket guard	VIII	-		acc. to catalogue page 9/09	
9.2	Bracket guard	VIB	-		acc. to catalogue page 9/09	
9.3	Leaf guard	VA	-		acc. to catalogue page 9/09	
9.4	Bearing guard	VII	-		acc. to catalogue page 9/09	
9.5	Stop block DrC	-	-		032-003	
9.6	Tilt restrictor striker plate	-	1201-1600		011-003	
9.7	Tilt restrictor arm	L	1201-1600		011-001	
		P	1201-1600		011-002	
9.8	Latch	acc. to profile	-		acc. to catalogue page 9/17	
9.9	Latch deadbolt	-	-		acc. to catalogue page 9/17	
9.10	Lift with blockade	-	-		032-001	

ASSEMBLING OF HARDWARE DrC

DRIVE GEAR Z ZN
WOODEN WINDOWS, TURN / TILT VERSION RU
ASSEMBLING OF HARDWARE ELEMENTS IN THE FRAME

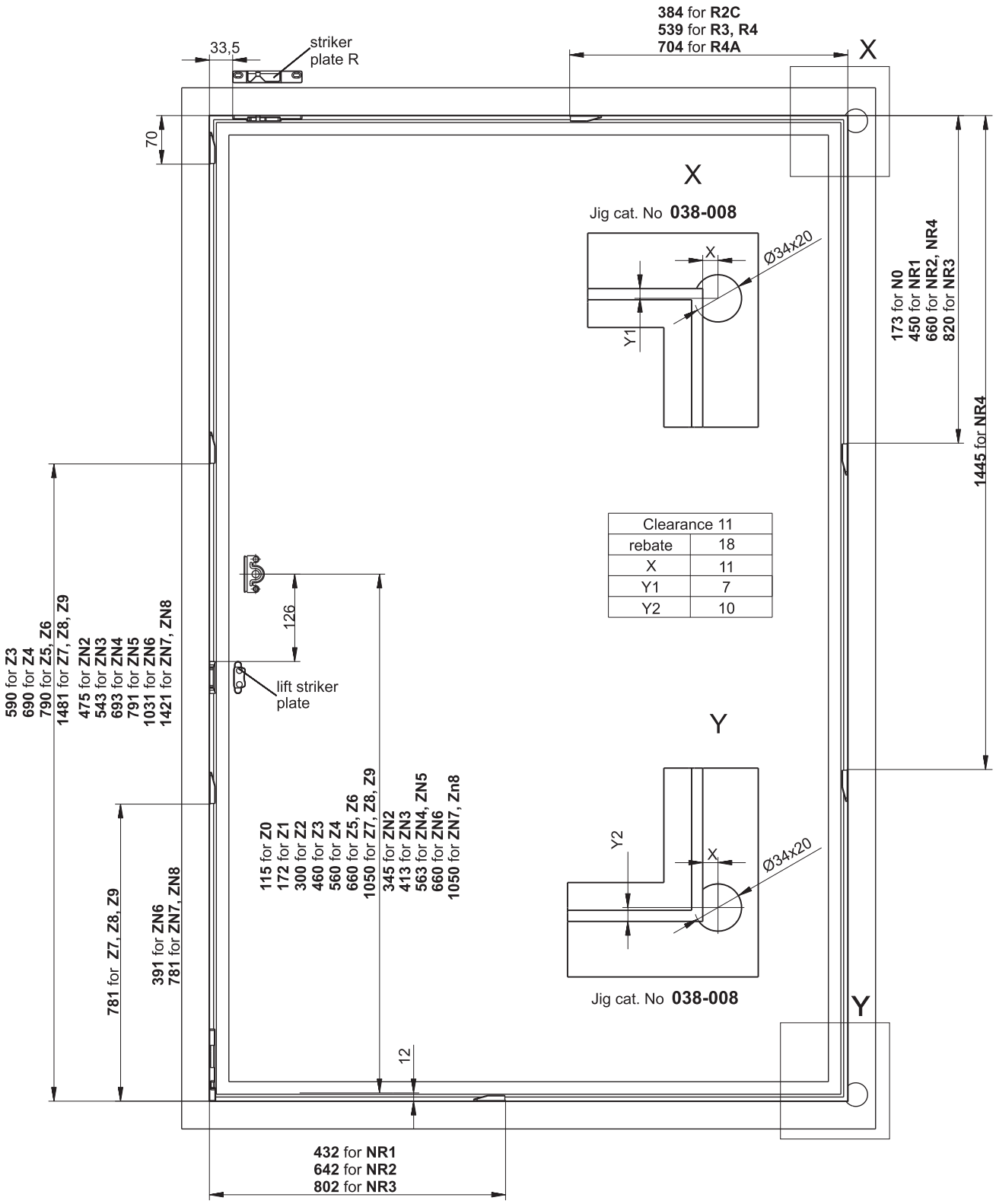

ASSEMBLING OF HARDWARE DrC

DRIVE GEAR ZN
WOODEN WINDOWS, TURN / TILT VERSION RU
LIST OF BASIC SUBASSEMBLIES

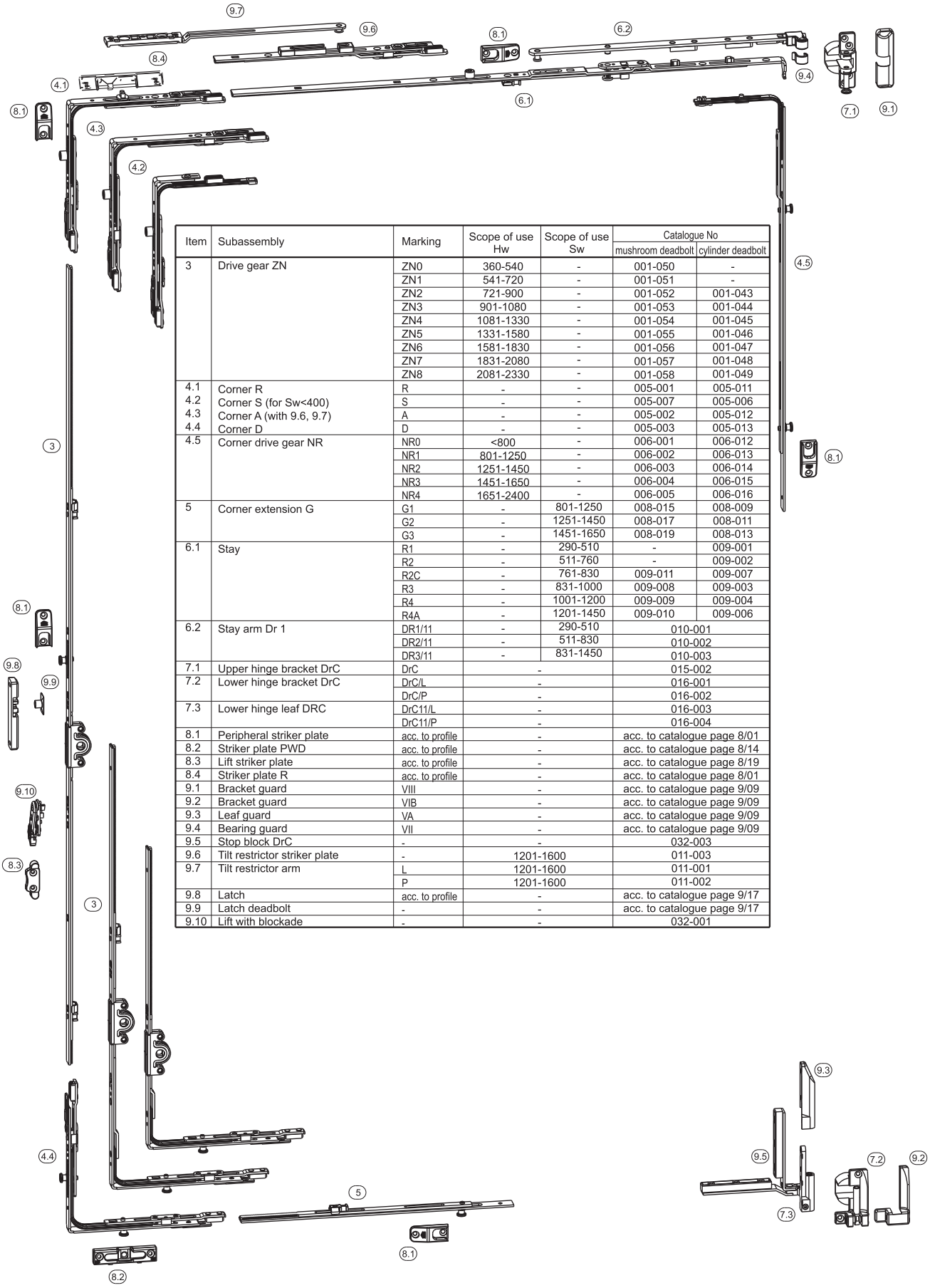

Item	Subassembly	Marking	Scope of use Hw	Scope of use Sw	Catalogue No mushroom deadbolt	Catalogue No cylinder deadbolt
3	Drive gear ZN	ZN0	360-540	-	001-050	-
		ZN1	541-720	-	001-051	-
		ZN2	721-900	-	001-052	001-043
		ZN3	901-1080	-	001-053	001-044
		ZN4	1081-1330	-	001-054	001-045
		ZN5	1331-1580	-	001-055	001-046
		ZN6	1581-1830	-	001-056	001-047
		ZN7	1831-2080	-	001-057	001-048
		ZN8	2081-2330	-	001-058	001-049
4.1	Corner R	R	-	-	005-001	005-011
4.2	Corner S (for Sw<400)	S	-	-	005-007	005-006
4.3	Corner A (with 9.6, 9.7)	A	-	-	005-002	005-012
4.4	Corner D	D	-	-	005-003	005-013
4.5	Corner drive gear NR	NR0	<800	-	006-001	006-012
		NR1	801-1250	-	006-002	006-013
		NR2	1251-1450	-	006-003	006-014
		NR3	1451-1650	-	006-004	006-015
		NR4	1651-2400	-	006-005	006-016
5	Corner extension G	G1	-	801-1250	008-015	008-009
		G2	-	1251-1450	008-017	008-011
		G3	-	1451-1650	008-019	008-013
6.1	Stay	R1	-	290-510	-	009-001
		R2	-	511-760	-	009-002
		R2C	-	761-830	009-011	009-007
		R3	-	831-1000	009-008	009-003
		R4	-	1001-1200	009-009	009-004
		R4A	-	1201-1450	009-010	009-006
6.2	Stay arm Dr 1	DR1/11	-	290-510	010-001	
		DR2/11	-	511-830	010-002	
		DR3/11	-	831-1450	010-003	
7.1	Upper hinge bracket DrC	DrC	-		015-002	
7.2	Lower hinge bracket DrC	DrC/L	-		016-001	
		DrC/P	-		016-002	
7.3	Lower hinge leaf DRC	DrC11/L	-		016-003	
		DrC11/P	-		016-004	
8.1	Peripheral striker plate	acc. to profile	-		acc. to catalogue page 8/01	
8.2	Striker plate PWD	acc. to profile	-		acc. to catalogue page 8/14	
8.3	Lift striker plate	acc. to profile	-		acc. to catalogue page 8/19	
8.4	Striker plate R	acc. to profile	-		acc. to catalogue page 8/01	
9.1	Bracket guard	VIII	-		acc. to catalogue page 9/09	
9.2	Bracket guard	VIB	-		acc. to catalogue page 9/09	
9.3	Leaf guard	VA	-		acc. to catalogue page 9/09	
9.4	Bearing guard	VII	-		acc. to catalogue page 9/09	
9.5	Stop block DrC	-	-		032-003	
9.6	Tilt restrictor striker plate	-	1201-1600		011-003	
9.7	Tilt restrictor arm	L	1201-1600		011-001	
		P	1201-1600		011-002	
9.8	Latch	acc. to profile	-		acc. to catalogue page 9/17	
9.9	Latch deadbolt	-	-		acc. to catalogue page 9/17	
9.10	Lift with blockade	-	-		032-001	

ASSEMBLING OF HARDWARE DrC

DRIVE GEAR ZN STRIKER PLATE PWD
WOODEN WINDOWS, TURN / TILT VERSION RU
ASSEMBLING OF HARDWARE ELEMENTS IN THE FRAME

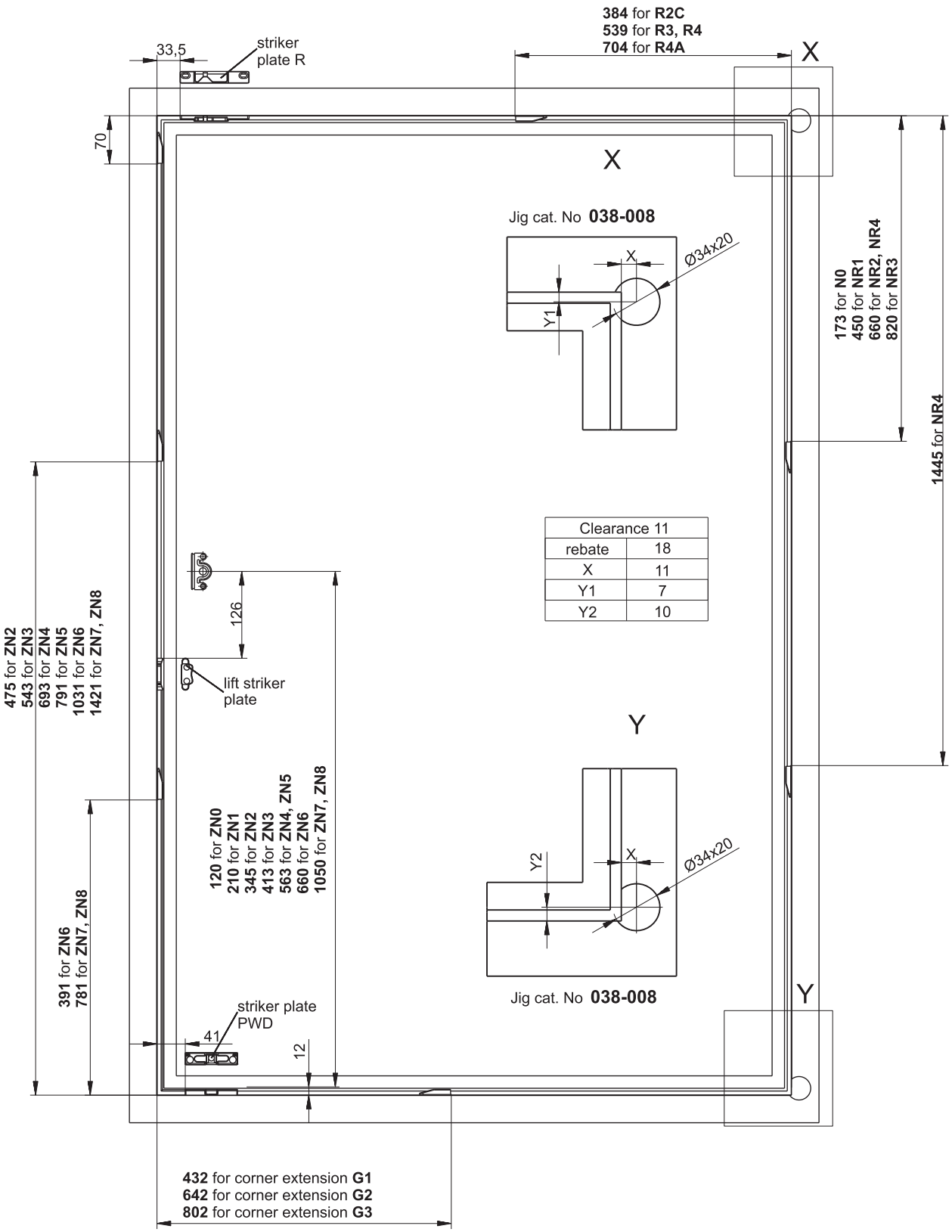

KARO

KRAJOWE AKCESORIA I ROZWIĄZANIA OKUCIOWE

ROMB SYSTEM

ASSEMBLING OF HARDWARE DrC

DRIVE GEAR Z B

WOODEN WINDOWS, VERSION FOR DOUBLE WINDOWS W/O POST RU-R

LIST OF BASIC SUBASSEMBLIES

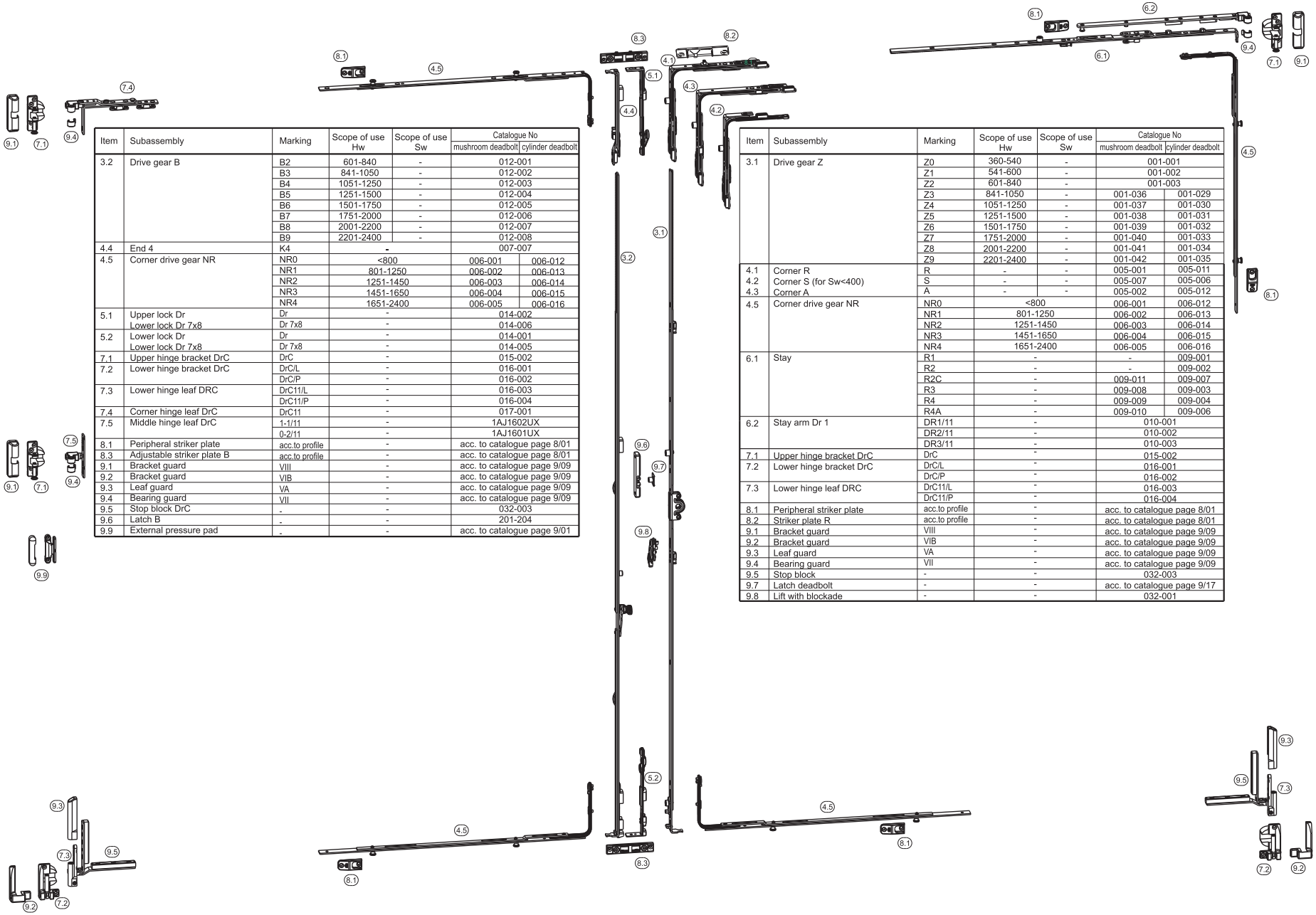

Item	Subassembly	Marking	Scope of use Hw	Scope of use Sw	Catalogue No	
					mushroom deadbolt	cylinder deadbolt
3.2	Drive gear B	B2	601-840	-	012-001	
		B3	841-1050	-	012-002	
		B4	1051-1250	-	012-003	
		B5	1251-1500	-	012-004	
		B6	1501-1750	-	012-005	
		B7	1751-2000	-	012-006	
		B8	2001-2200	-	012-007	
		B9	2201-2400	-	012-008	
4.4	End 4	K4	-		007-007	
4.5	Corner drive gear NR	NR0	<800		006-001	006-012
		NR1	801-1250		006-002	006-013
		NR2	1251-1450		006-003	006-014
		NR3	1451-1650		006-004	006-015
		NR4	1651-2400		006-005	006-016
5.1	Upper lock Dr	Dr	-		014-002	
	Lower lock Dr 7x8	Dr 7x8	-		014-006	
5.2	Lower lock Dr	Dr	-		014-001	
	Lower lock Dr 7x8	Dr 7x8	-		014-005	
7.1	Upper hinge bracket DrC	DrC	-		015-002	
7.2	Lower hinge bracket DrC	DrC/L	-		016-001	
		DrC/P	-		016-002	
7.3	Lower hinge leaf DRC	DrC11/L	-		016-003	
		DrC11/P	-		016-004	
7.4	Corner hinge leaf DrC	DrC11	-		017-001	
7.5	Middle hinge leaf DrC	1-1/11	-		1AJ1602UX	
		0-2/11	-		1AJ1601UX	
8.1	Peripheral striker plate	acc.to profile	-		acc. to catalogue page 8/01	
8.3	Adjustable striker plate B	acc.to profile	-		acc. to catalogue page 8/01	
9.1	Bracket guard	VIII	-		acc. to catalogue page 9/09	
9.2	Bracket guard	VIB	-		acc. to catalogue page 9/09	
9.3	Leaf guard	VA	-		acc. to catalogue page 9/09	
9.4	Bearing guard	VII	-		acc. to catalogue page 9/09	
9.5	Stop block DrC	-	-		032-003	
9.6	Latch B	-	-		201-204	
9.9	External pressure pad	-	-		acc. to catalogue page 9/01	

Item	Subassembly	Marking	Scope of use Hw	Scope of use Sw	Catalogue No	
					mushroom deadbolt	cylinder deadbolt
3.1	Drive gear Z	Z0	360-540	-	001-001	
		Z1	541-600	-	001-002	
		Z2	601-840	-	001-003	
		Z3	841-1050	-	001-036	001-029
		Z4	1051-1250	-	001-037	001-030
		Z5	1251-1500	-	001-038	001-031
		Z6	1501-1750	-	001-039	001-032
		Z7	1751-2000	-	001-040	001-033
		Z8	2001-2200	-	001-041	001-034
		Z9	2201-2400	-	001-042	001-035
4.1	Corner R	R	-	-	005-001	005-011
4.2	Corner S (for Sw<400)	S	-	-	005-007	005-006
4.3	Corner A	A	-	-	005-002	005-012
4.5	Corner drive gear NR	NR0	<800		006-001	006-012
		NR1	801-1250		006-002	006-013
		NR2	1251-1450		006-003	006-014
		NR3	1451-1650		006-004	006-015
		NR4	1651-2400		006-005	006-016
6.1	Stay	R1	-		-	009-001
		R2	-		-	009-002
		R2C	-		009-011	009-007
		R3	-		009-008	009-003
		R4	-		009-009	009-004
		R4A	-		009-010	009-006
6.2	Stay arm Dr 1	DR1/11	-		010-001	
		DR2/11	-		010-002	
		DR3/11	-		010-003	
7.1	Upper hinge bracket DrC	DrC	-		015-002	
7.2	Lower hinge bracket DrC	DrC/L	-		016-001	
		DrC/P	-		016-002	
7.3	Lower hinge leaf DRC	DrC11/L	-		016-003	
		DrC11/P	-		016-004	
8.1	Peripheral striker plate	acc.to profile	-		acc. to catalogue page 8/01	
8.2	Striker plate R	acc.to profile	-		acc. to catalogue page 8/01	
9.1	Bracket guard	VIII	-		acc. to catalogue page 9/09	
9.2	Bracket guard	VIB	-		acc. to catalogue page 9/09	
9.3	Leaf guard	VA	-		acc. to catalogue page 9/09	
9.4	Bearing guard	VII	-		acc. to catalogue page 9/09	
9.5	Stop block	-	-		032-003	
9.7	Latch deadbolt	-	-		acc. to catalogue page 9/17	
9.8	Lift with blockade	-	-		032-001	

ASSEMBLING OF HARDWARE DrC

DRIVE GEAR Z B
WOODEN WINDOWS, VERSION FOR DOUBLE WINDOWS W/O POST RU-R
ASSEMBLING OF HARDWARE ELEMENTS ON THE FRAME

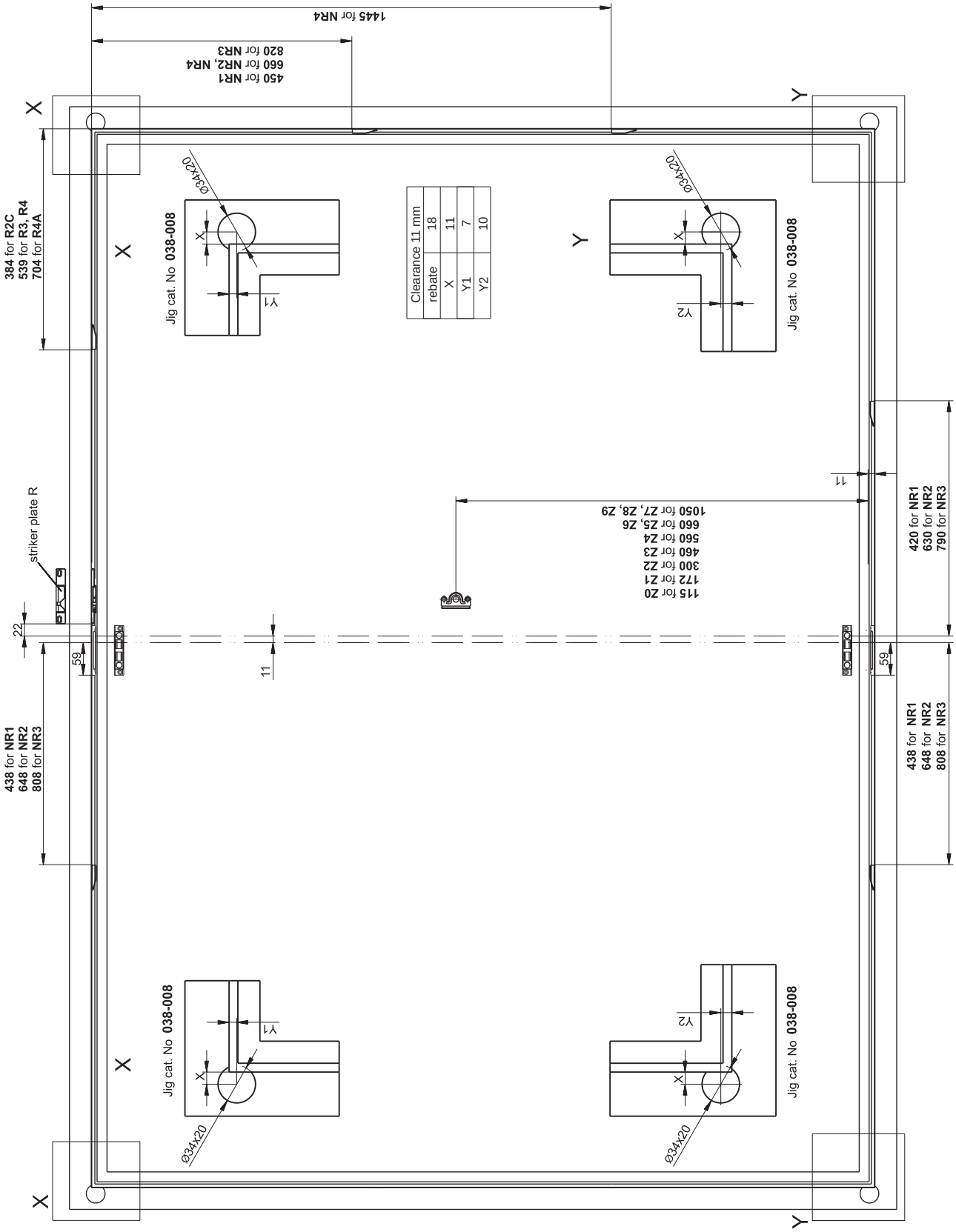

KARO

KRAJOWE AKCESORIA I ROZWIĄZANIA OKUCIOWE

ROMB SYSTEM

ASSEMBLING OF HARDWARE DrC

DRIVE GEAR ZN BZ

WOODEN WINDOWS, VERSION FOR DOUBLE WINDOWS W/O POST RU-R

LIST OF BASIC SUBASSEMBLIES

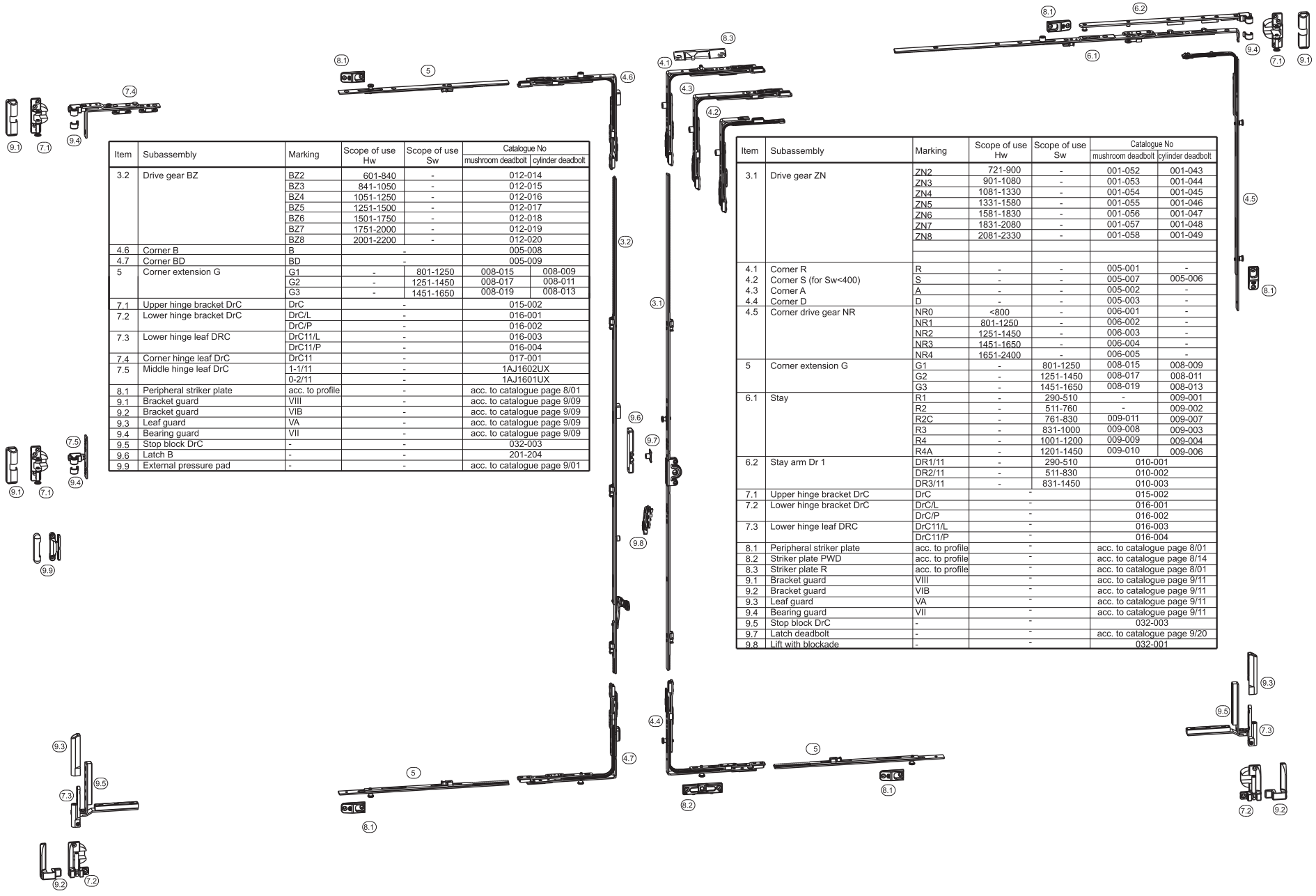

Item	Subassembly	Marking	Scope of use Hw	Scope of use Sw	Catalogue No	
					mushroom deadbolt	cylinder deadbolt
3.2	Drive gear BZ	BZ2	601-840	-	012-014	
		BZ3	841-1050	-	012-015	
		BZ4	1051-1250	-	012-016	
		BZ5	1251-1500	-	012-017	
		BZ6	1501-1750	-	012-018	
		BZ7	1751-2000	-	012-019	
		BZ8	2001-2200	-	012-020	
4.6	Corner B	B	-		005-008	
4.7	Corner BD	BD	-		005-009	
5	Corner extension G	G1	-	801-1250	008-015	008-009
		G2	-	1251-1450	008-017	008-011
		G3	-	1451-1650	008-019	008-013
7.1	Upper hinge bracket DrC	DrC	-		015-002	
7.2	Lower hinge bracket DrC	DrC/L	-		016-001	
		DrC/P	-		016-002	
7.3	Lower hinge leaf DRC	DrC11/L	-		016-003	
		DrC11/P	-		016-004	
7.4	Corner hinge leaf DrC	DrC11	-		017-001	
7.5	Middle hinge leaf DrC	1-1/11	-		1AJ1602UX	
		0-2/11	-		1AJ1601UX	
8.1	Peripheral striker plate	acc. to profile	-		acc. to catalogue page 8/01	
9.1	Bracket guard	VIII	-		acc. to catalogue page 9/09	
9.2	Bracket guard	VIB	-		acc. to catalogue page 9/09	
9.3	Leaf guard	VA	-		acc. to catalogue page 9/09	
9.4	Bearing guard	VII	-		acc. to catalogue page 9/09	
9.5	Stop block DrC	-	-		032-003	
9.6	Latch B	-	-		201-204	
9.9	External pressure pad	-	-		acc. to catalogue page 9/01	

Item	Subassembly	Marking	Scope of use Hw	Scope of use Sw	Catalogue No	
					mushroom deadbolt	cylinder deadbolt
3.1	Drive gear ZN	ZN2	721-900	-	001-052	001-043
		ZN3	901-1080	-	001-053	001-044
		ZN4	1081-1330	-	001-054	001-045
		ZN5	1331-1580	-	001-055	001-046
		ZN6	1581-1830	-	001-056	001-047
		ZN7	1831-2080	-	001-057	001-048
		ZN8	2081-2330	-	001-058	001-049
4.1	Corner R	R	-	-	005-001	-
4.2	Corner S (for Sw<400)	S	-	-	005-007	005-006
4.3	Corner A	A	-	-	005-002	-
4.4	Corner D	D	-	-	005-003	-
4.5	Corner drive gear NR	NR0	<800	-	006-001	-
		NR1	801-1250	-	006-002	-
		NR2	1251-1450	-	006-003	-
		NR3	1451-1650	-	006-004	-
		NR4	1651-2400	-	006-005	-
5	Corner extension G	G1	-	801-1250	008-015	008-009
		G2	-	1251-1450	008-017	008-011
		G3	-	1451-1650	008-019	008-013
6.1	Stay	R1	-	290-510	-	009-001
		R2	-	511-760	-	009-002
		R2C	-	761-830	009-011	009-007
		R3	-	831-1000	009-008	009-003
		R4	-	1001-1200	009-009	009-004
		R4A	-	1201-1450	009-010	009-006
6.2	Stay arm Dr 1	DR1/11	-	290-510	010-001	
		DR2/11	-	511-830	010-002	
		DR3/11	-	831-1450	010-003	
7.1	Upper hinge bracket DrC	DrC	-		015-002	
7.2	Lower hinge bracket DrC	DrC/L	-		016-001	
		DrC/P	-		016-002	
7.3	Lower hinge leaf DRC	DrC11/L	-		016-003	
		DrC11/P	-		016-004	
8.1	Peripheral striker plate	acc. to profile	-		acc. to catalogue page 8/01	
8.2	Striker plate PWD	acc. to profile	-		acc. to catalogue page 8/14	
8.3	Striker plate R	acc. to profile	-		acc. to catalogue page 8/01	
9.1	Bracket guard	VIII	-		acc. to catalogue page 9/11	
9.2	Bracket guard	VIB	-		acc. to catalogue page 9/11	
9.3	Leaf guard	VA	-		acc. to catalogue page 9/11	
9.4	Bearing guard	VII	-		acc. to catalogue page 9/11	
9.5	Stop block DrC	-	-		032-003	
9.7	Latch deadbolt	-	-		acc. to catalogue page 9/20	
9.8	Lift with blockade	-	-		032-001	

ASSEMBLING OF HARDWARE DrC

DRIVE GEAR ZN BZ

WOODEN WINDOWS, VERSION FOR DOUBLE WINDOWS W/O POST RU-R

ASSEMBLING OF HARDWARE ELEMENTS ON THE FRAME

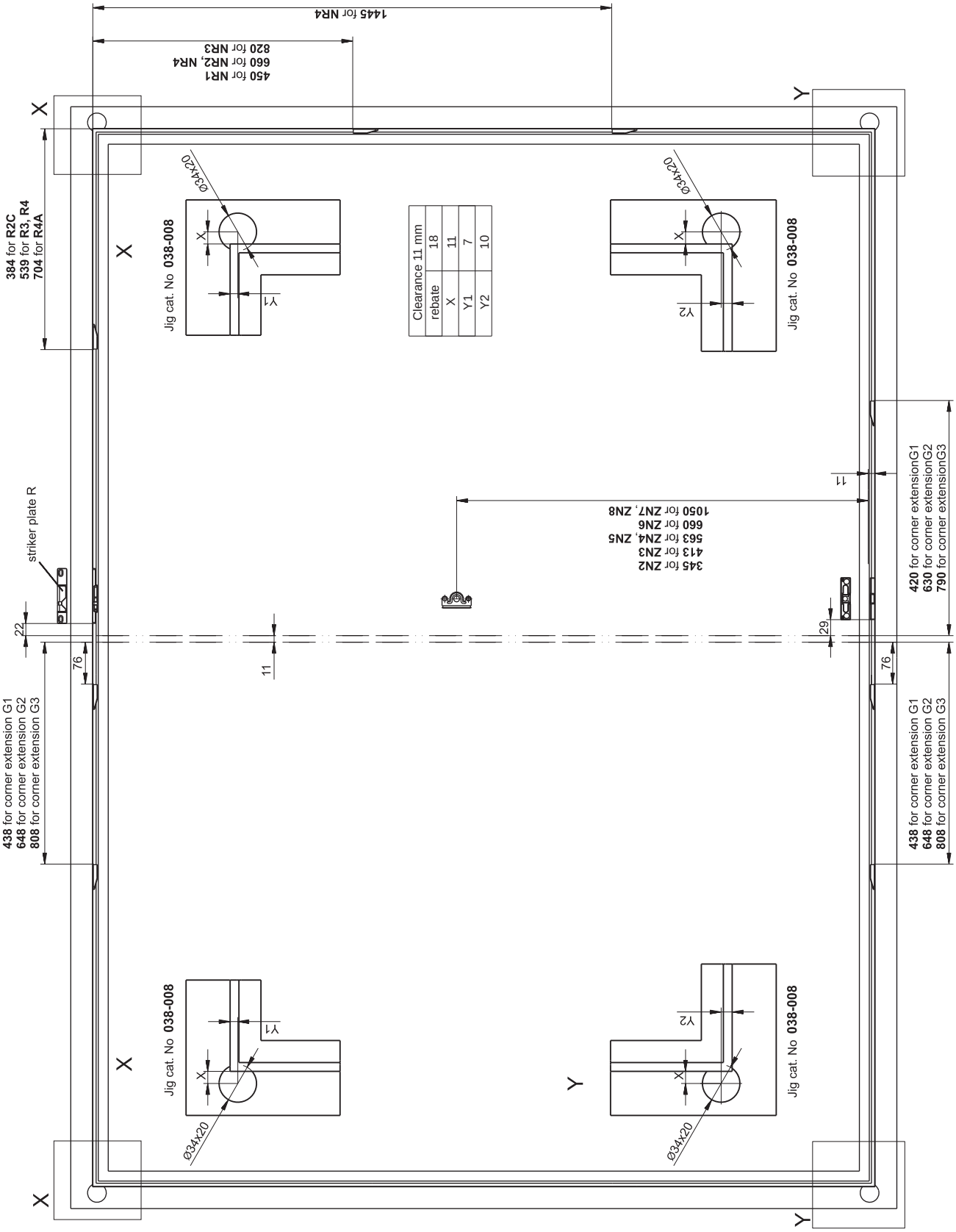

ASSEMBLING OF HARDWARE DrC

DRIVE GEAR Z
WOODEN WINDOWS, TURN VERSION R
LIST OF BASIC SUBASSEMBLIES

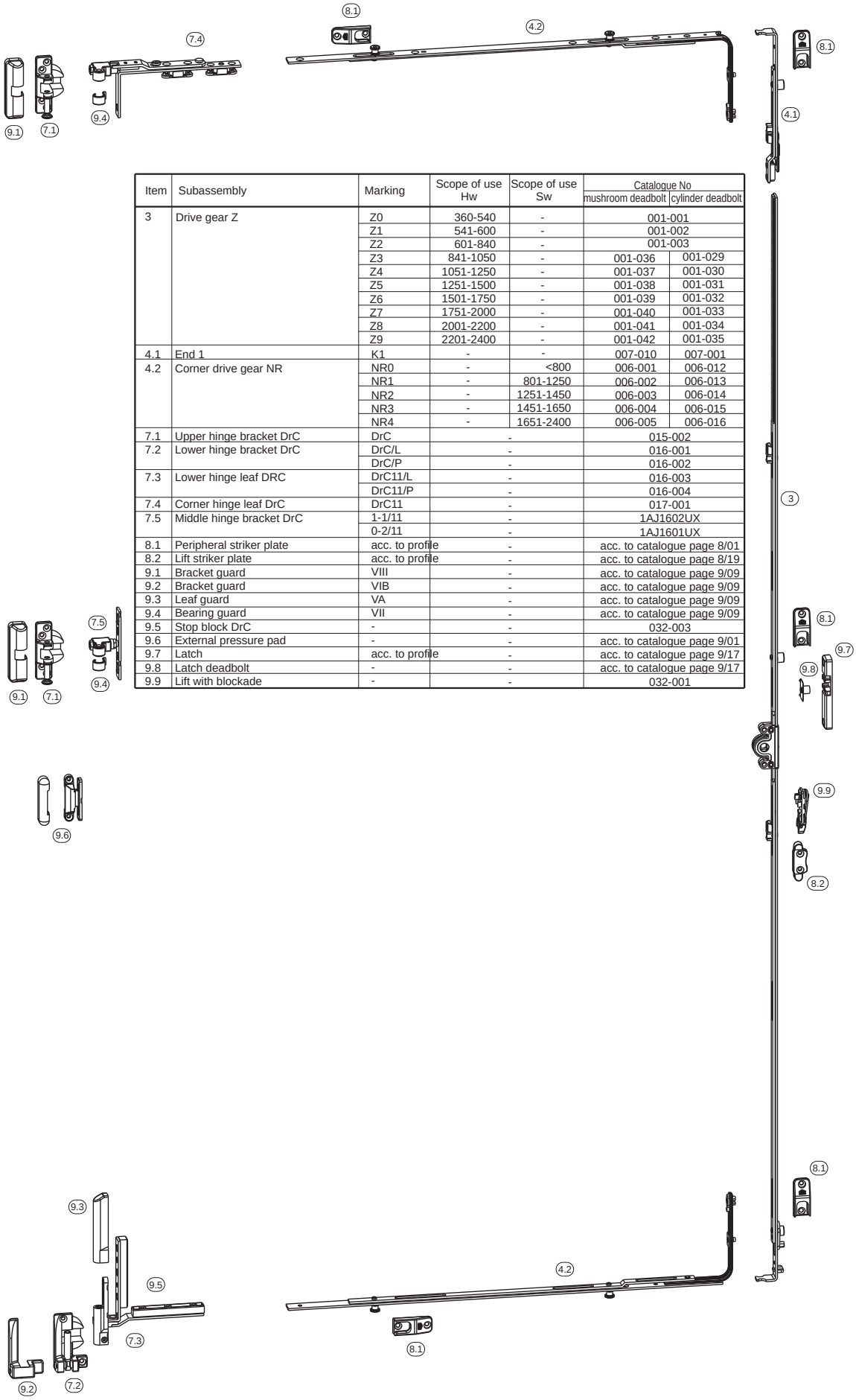

Item	Subassembly	Marking	Scope of use Hw	Scope of use Sw	Catalogue No mushroom deadbolt	Catalogue No cylinder deadbolt
3	Drive gear Z	Z0	360-540	-	001-001	
		Z1	541-600	-	001-002	
		Z2	601-840	-	001-003	
		Z3	841-1050	-	001-036	001-029
		Z4	1051-1250	-	001-037	001-030
		Z5	1251-1500	-	001-038	001-031
		Z6	1501-1750	-	001-039	001-032
		Z7	1751-2000	-	001-040	001-033
		Z8	2001-2200	-	001-041	001-034
		Z9	2201-2400	-	001-042	001-035
4.1	End 1	K1	-	-	007-010	007-001
4.2	Corner drive gear NR	NR0	-	<800	006-001	006-012
		NR1	-	801-1250	006-002	006-013
		NR2	-	1251-1450	006-003	006-014
		NR3	-	1451-1650	006-004	006-015
		NR4	-	1651-2400	006-005	006-016
7.1	Upper hinge bracket DrC	DrC	-		015-002	
7.2	Lower hinge bracket DrC	DrC/L	-		016-001	
		DrC/P	-		016-002	
7.3	Lower hinge leaf DRC	DrC11/L	-		016-003	
		DrC11/P	-		016-004	
7.4	Corner hinge leaf DrC	DrC11	-		017-001	
7.5	Middle hinge bracket DrC	1-1/11	-		1AJ1602UX	
		0-2/11	-		1AJ1601UX	
8.1	Peripheral striker plate	acc. to profile	-		acc. to catalogue page 8/01	
8.2	Lift striker plate	acc. to profile	-		acc. to catalogue page 8/19	
9.1	Bracket guard	VIII	-		acc. to catalogue page 9/09	
9.2	Bracket guard	VIB	-		acc. to catalogue page 9/09	
9.3	Leaf guard	VA	-		acc. to catalogue page 9/09	
9.4	Bearing guard	VII	-		acc. to catalogue page 9/09	
9.5	Stop block DrC	-	-		032-003	
9.6	External pressure pad	-	-		acc. to catalogue page 9/01	
9.7	Latch	acc. to profile	-		acc. to catalogue page 9/17	
9.8	Latch deadbolt	-	-		acc. to catalogue page 9/17	
9.9	Lift with blockade	-	-		032-001	

ASSEMBLING OF HARDWARE DrC

DRIVE GEAR Z
WOODEN WINDOWS, TURN VERSION R
ASSEMBLING OF HARDWARE ELEMENTS ON THE FRAME

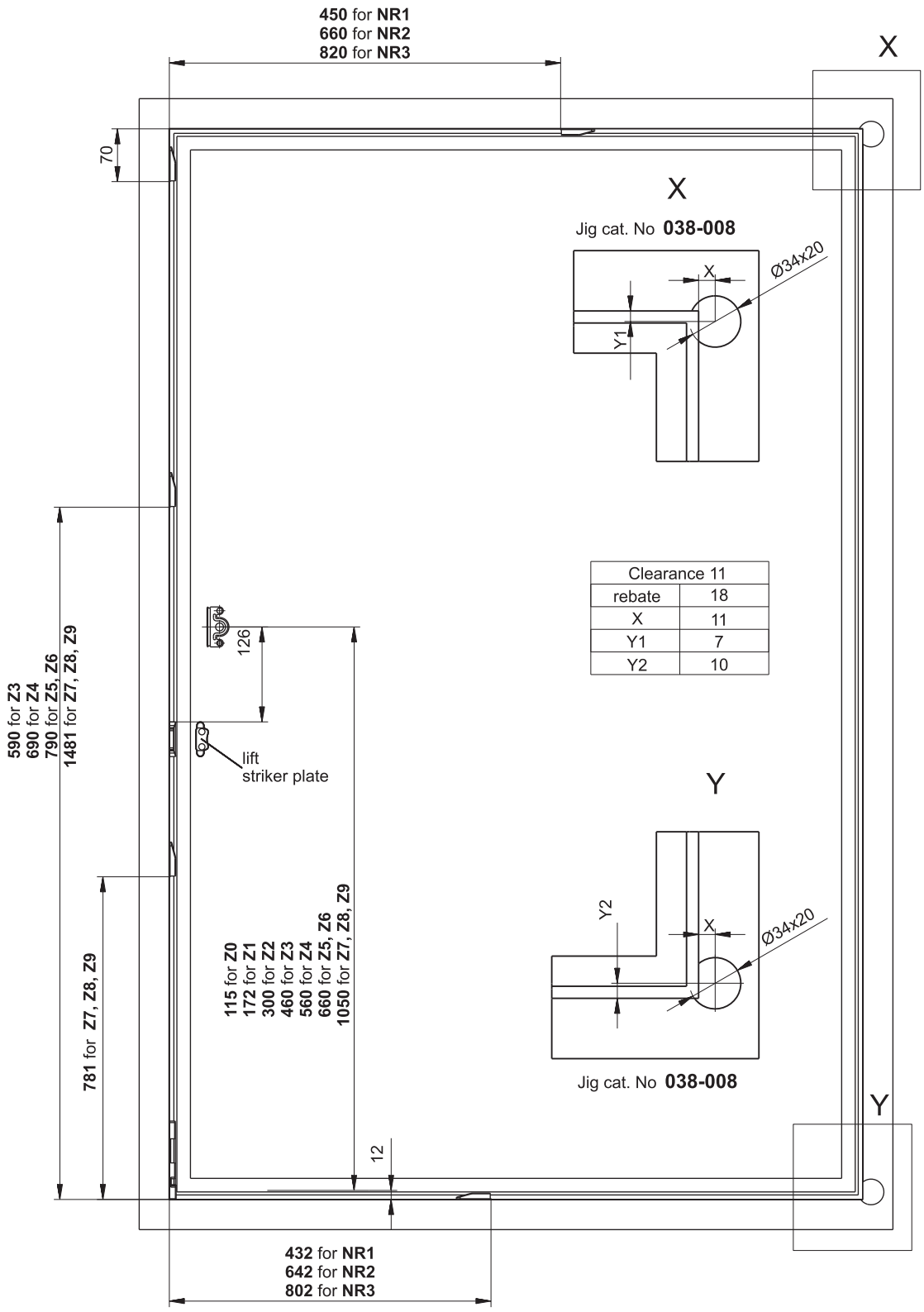

ASSEMBLING OF HARDWARE DrC

DRIVE GEAR ZN
WOODEN WINDOWS, TURN VERSION R
LIST OF BASIC SUBASSEMBLIES

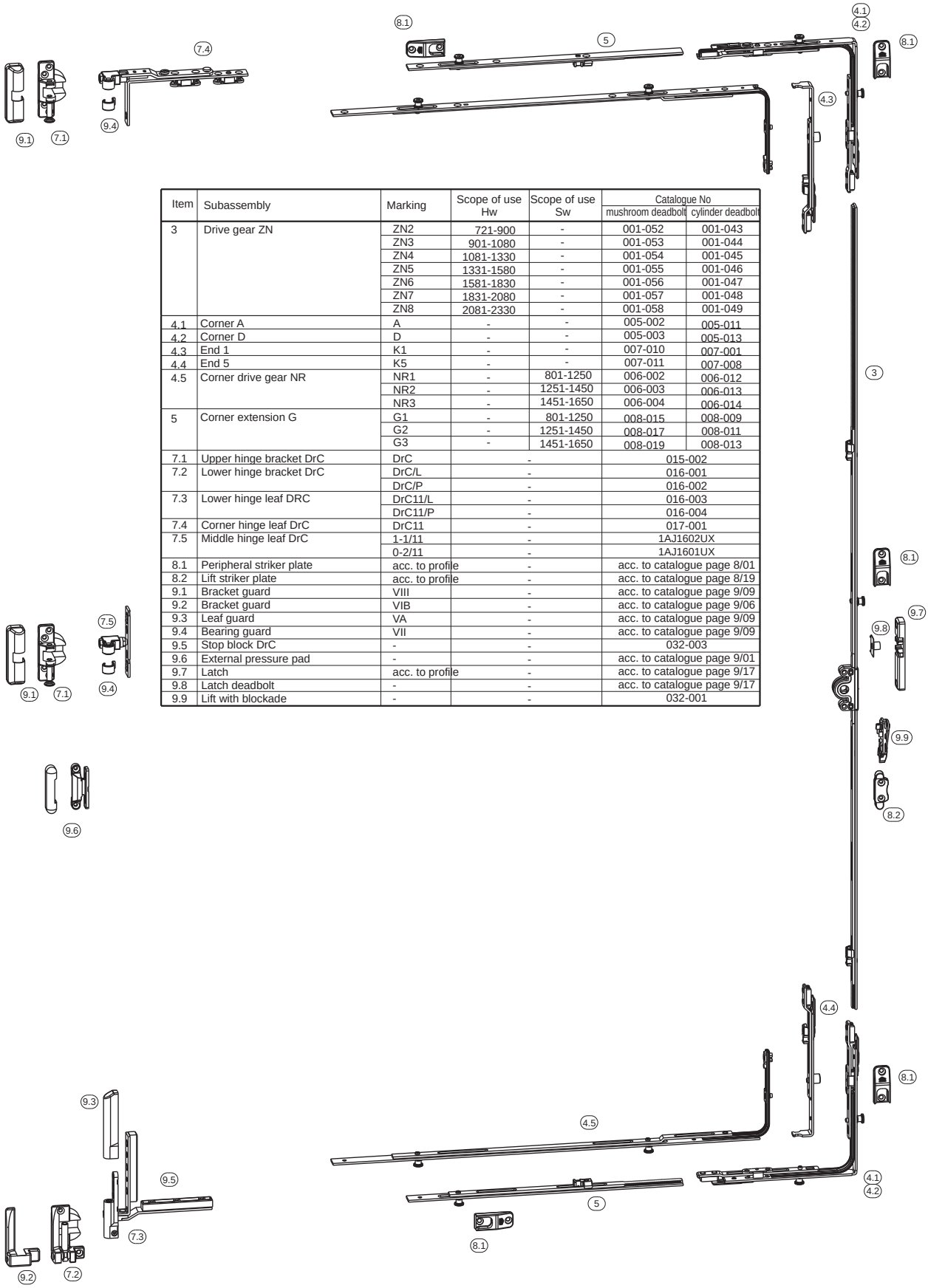

Item	Subassembly	Marking	Scope of use Hw	Scope of use Sw	Catalogue No mushroom deadbolt	Catalogue No cylinder deadbolt
3	Drive gear ZN	ZN2	721-900	-	001-052	001-043
		ZN3	901-1080	-	001-053	001-044
		ZN4	1081-1330	-	001-054	001-045
		ZN5	1331-1580	-	001-055	001-046
		ZN6	1581-1830	-	001-056	001-047
		ZN7	1831-2080	-	001-057	001-048
		ZN8	2081-2330	-	001-058	001-049
4.1	Corner A	A	-	-	005-002	005-011
4.2	Corner D	D	-	-	005-003	005-013
4.3	End 1	K1	-	-	007-010	007-001
4.4	End 5	K5	-	-	007-011	007-008
4.5	Corner drive gear NR	NR1	-	801-1250	006-002	006-012
		NR2	-	1251-1450	006-003	006-013
		NR3	-	1451-1650	006-004	006-014
5	Corner extension G	G1	-	801-1250	008-015	008-009
		G2	-	1251-1450	008-017	008-011
		G3	-	1451-1650	008-019	008-013
7.1	Upper hinge bracket DrC	DrC	-		015-002	
7.2	Lower hinge bracket DrC	DrC/L	-		016-001	
		DrC/P	-		016-002	
7.3	Lower hinge leaf DRC	DrC11/L	-		016-003	
		DrC11/P	-		016-004	
7.4	Corner hinge leaf DrC	DrC11	-		017-001	
7.5	Middle hinge leaf DrC	1-1/11	-		1AJ1602UX	
		0-2/11	-		1AJ1601UX	
8.1	Peripheral striker plate	acc. to profile	-		acc. to catalogue page 8/01	
8.2	Lift striker plate	acc. to profile	-		acc. to catalogue page 8/19	
9.1	Bracket guard	VIII	-		acc. to catalogue page 9/09	
9.2	Bracket guard	VIB	-		acc. to catalogue page 9/06	
9.3	Leaf guard	VA	-		acc. to catalogue page 9/09	
9.4	Bearing guard	VII	-		acc. to catalogue page 9/09	
9.5	Stop block DrC	-	-		032-003	
9.6	External pressure pad	-	-		acc. to catalogue page 9/01	
9.7	Latch	acc. to profile	-		acc. to catalogue page 9/17	
9.8	Latch deadbolt	-	-		acc. to catalogue page 9/17	
9.9	Lift with blockade	-	-		032-001	

ASSEMBLING OF HARDWARE DrC

DRIVE GEAR ZN
WOODEN WINDOWS, TURN VERSION R
ASSEMBLING OF HARDWARE ELEMENTS ON THE FRAME

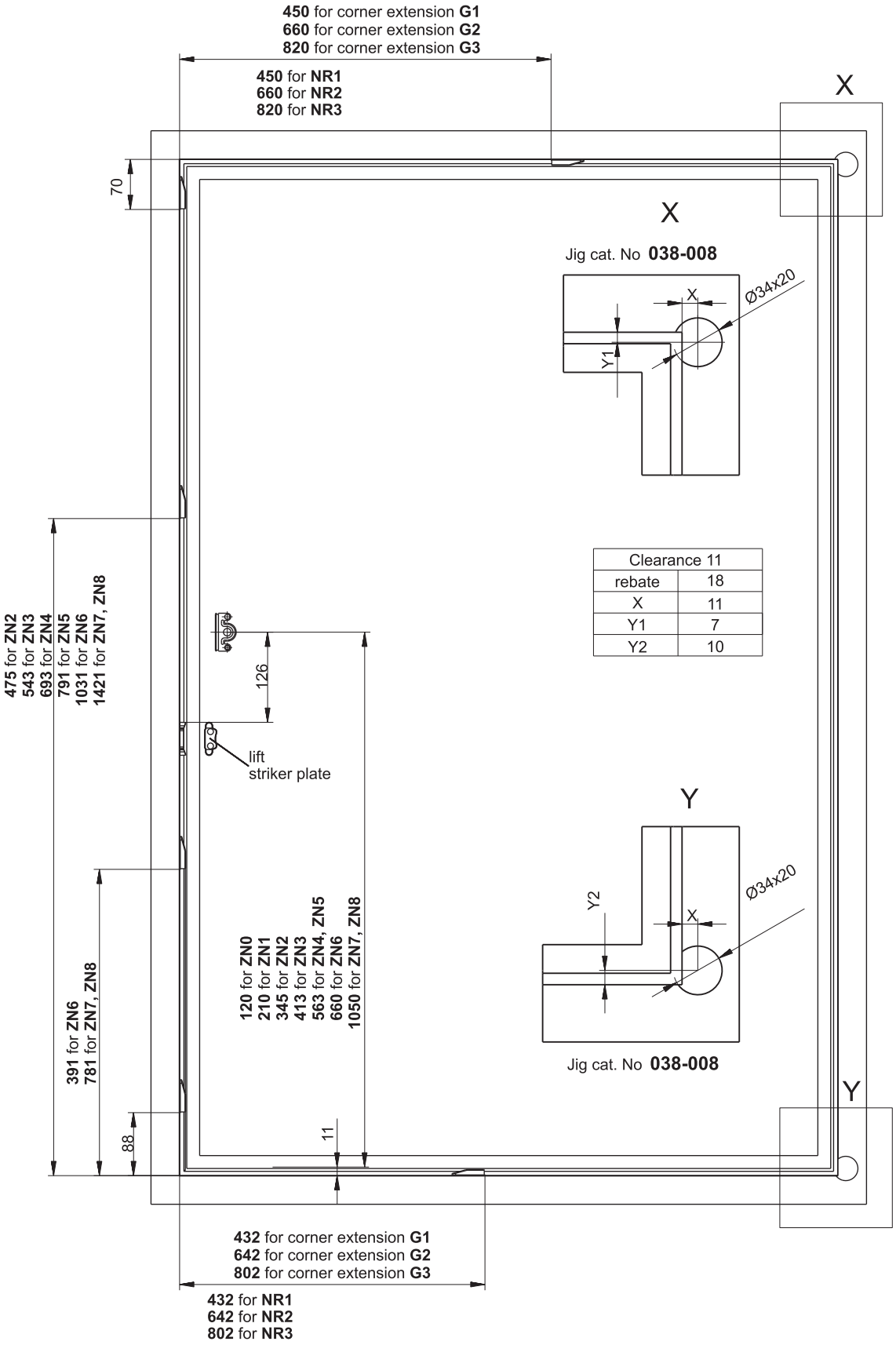

ASSEMBLING OF HARDWARE DrC

DRIVE GEAR ZNR
WOODEN WINDOWS, TURN VERSION R
LIST OF BASIC SUBASSEMBLIES

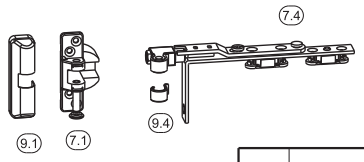

Item	Subassembly	Marking	Scope of use Hw	Scope of use Sw	Catalogue No mushroom deadbolt	Catalogue No cylinder deadbolt
3	Drive gear ZNR	ZNR0	265-540	-	001-068	001-059
		ZNR1	541-720	-	001-069	001-060
		ZNR2	721-900	-	001-070	001-061
		ZNR3	901-1080	-	001-071	001-062
		ZNR4	1081-1330	-	001-072	001-063
		ZNR5	1331-1580	-	001-073	001-064
		ZNR6	1581-1830	-	001-074	001-065
		ZNR7	1831-2080	-	001-075	001-066
		ZNR8	2081-2330	-	001-076	001-067
7.1	Upper hinge bracket DrC	DrC	-		015-002	
7.2	Lower hinge bracket DrC	DrC/L	-		016-001	
		DrC/P	-		016-002	
7.3	Lower hinge leaf DRC	DrC11/L	-		016-003	
		DrC11/P	-		016-004	
7.4	Corner hinge leaf DrC	DrC11	-		017-001	
7.5	Middle hinge leaf DrC	1-1/11	-		1AJ1602UX	
		0-2/11	-		1AJ1601UX	
8.1	Peripheral striker plate	acc. to profile	-		acc. to catalogue page 8/01	
8.2	Lift striker plate	acc. to profile	-		acc. to catalogue page 8/19	
9.1	Bracket guard	VIII	-		acc. to catalogue page 9/09	
9.2	Bracket guard	VIB	-		acc. to catalogue page 9/09	
9.3	Leaf guard	VA	-		acc. to catalogue page 9/09	
9.4	Bearing guard	VII	-		acc. to catalogue page 9/09	
9.5	Stop block DrC	-	-		032-003	
9.6	External pressure pad	-	-		acc. to catalogue page 9/01	
9.7	Latch	acc. to profile	-		acc. to catalogue page 9/17	
9.8	Latch deadbolt	-	-		acc. to catalogue page 9/17	
9.9	Lift with blockade	-	-		032-001	

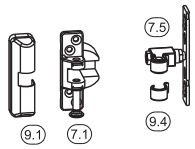

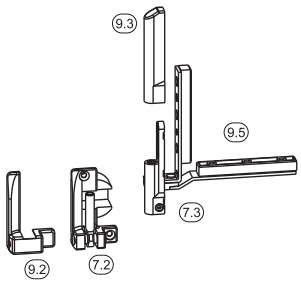

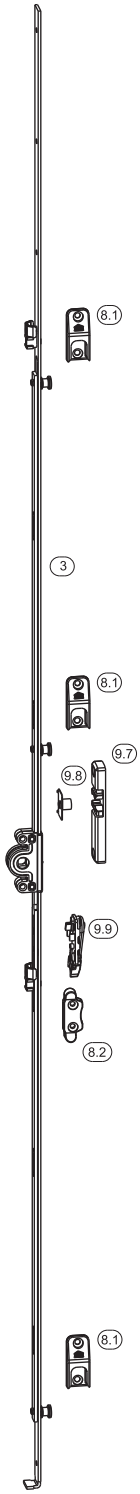

ASSEMBLING OF HARDWARE DrC

DRIVE GEAR ZNR
WOODEN WINDOWS, TURN VERSION R
ASSEMBLING OF HARDWARE ELEMENTS ON THE FRAME

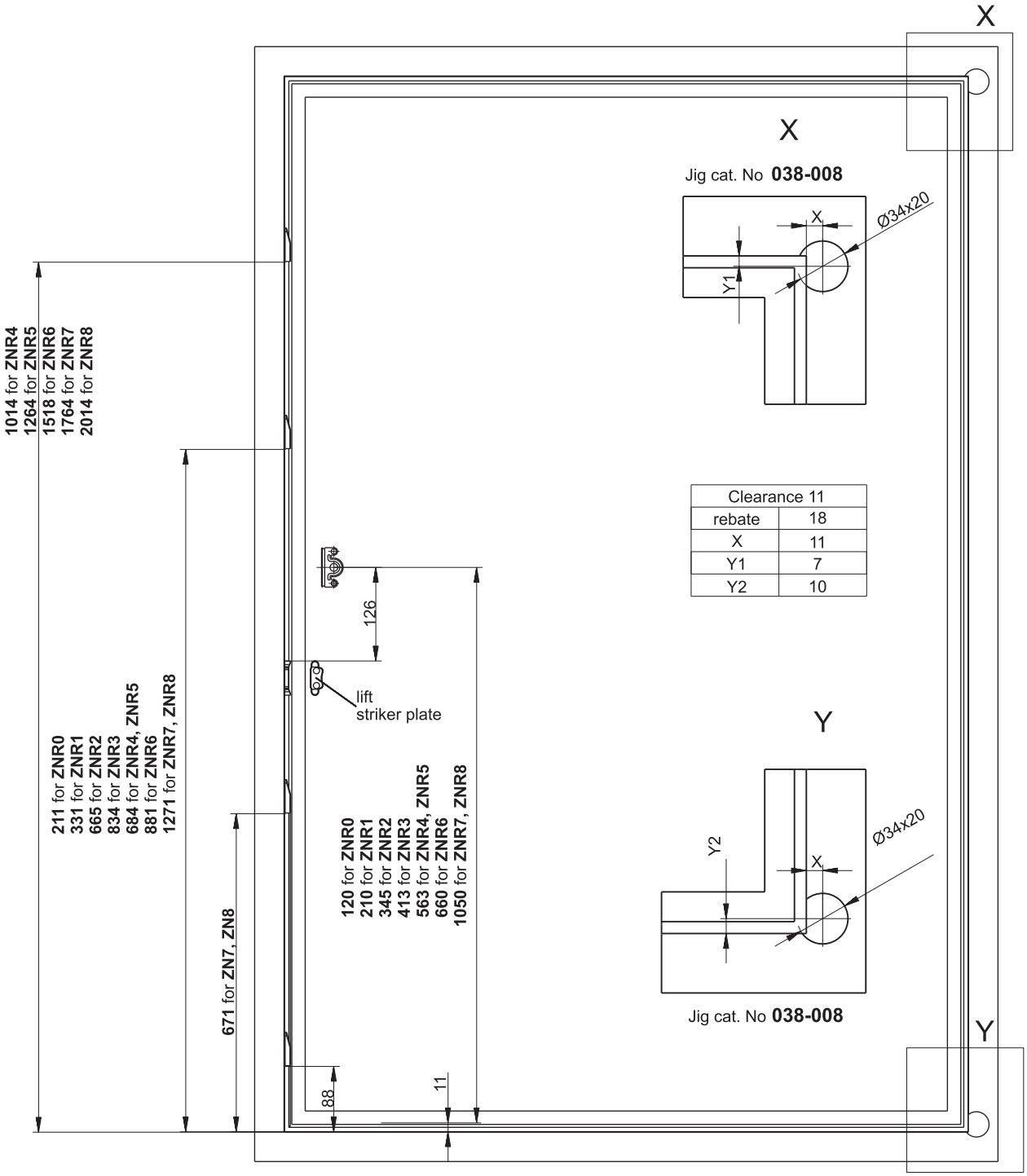

ASSEMBLING OF HARDWARE DrC

DRIVE GEAR S, SR
WOODEN WINDOWS, TURN VERSION R
LIST OF BASIC SUBASSEMBLIES

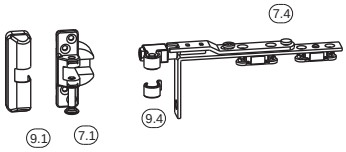

Item	Subassembly	Marking	Scope of use Hw	Scope of use Sw	Catalogue No mushroom deadbolt	Catalogue No cylinder deadbolt
3.1	Drive gear S	S00	<340	-	004-005	004-001
		S01	341-540	-	004-006	004-002
		S02	541-730	-	004-007	004-003
		S03	731-990	-	004-008	004-004
		S1A	991-1250	-	004-013	004-009
		S2	1251-1450	-	004-014	004-010
		S3	1451-1900	-	004-015	004-011
		S4	1901-2400	-	004-016	004-012
3.2	Drive gear SR	SR1A	991-1250	-	004-021	004-017
		SR2	1251-1450	-	004-022	004-018
		SR3	1451-1900	-	004-023	004-019
		SR4	1901-2400	-	004-024	004-020
7.1	Upper hinge bracket DrC	DrC	-		015-002	
7.2	Lower hinge bracket DrC	DrC/L	-		016-001	
		DrC/P	-		016-002	
7.3	Lower hinge leaf DRC	DrC11/L	-		016-003	
		DrC11/P	-		016-004	
7.4	Corner hinge leaf DrC	DrC11	-		017-001	
7.5	Middle hinge leaf DrC	1-1/11	-		1AJ1602UX	
		0-2/11	-		1AJ1601UX	
8.1	Peripheral striker plate	acc. to profile	-		acc. to catalogue page 8/01	
8.2	Lift striker plate	acc. to profile	-		acc. to catalogue page 8/19	
9.1	Bracket guard	VIII	-		acc. to catalogue page 9/09	
9.2	Bracket guard	VIB	-		acc. to catalogue page 9/09	
9.3	Leaf guard	VA	-		acc. to catalogue page 9/09	
9.4	bearing guard	VII	-		acc. to catalogue page 9/09	
9.5	Stop block DrC	-	-		032-003	
9.6	External pressure pad	-	-		acc. to catalogue page 9/01	
9.7	Latch	acc. to profile	-		acc. to catalogue page 9/17	
9.8	Latch deadbolt	-	-		acc. to catalogue page 9/17	
9.9	Lift with blockade	-	-		032-001	

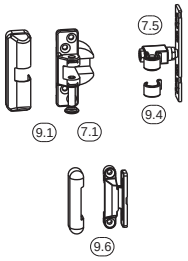

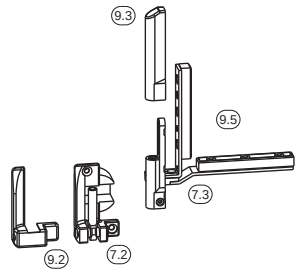

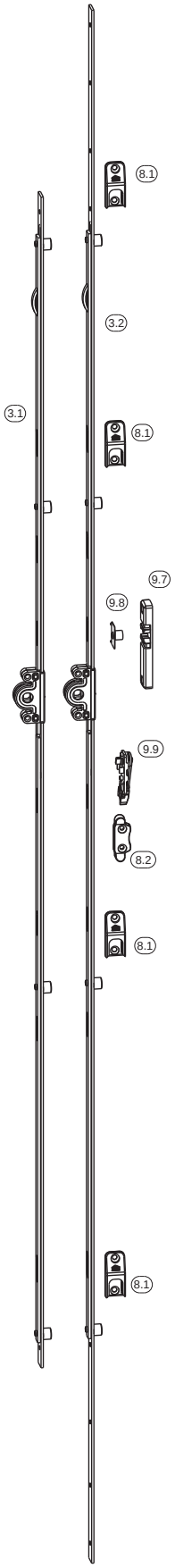

ASSEMBLING OF HARDWARE DrC

DRIVE GEAR S, SR
WOODEN WINDOWS, TURN VERSION R
ASSEMBLING OF HARDWARE ELEMENTS ON THE FRAME

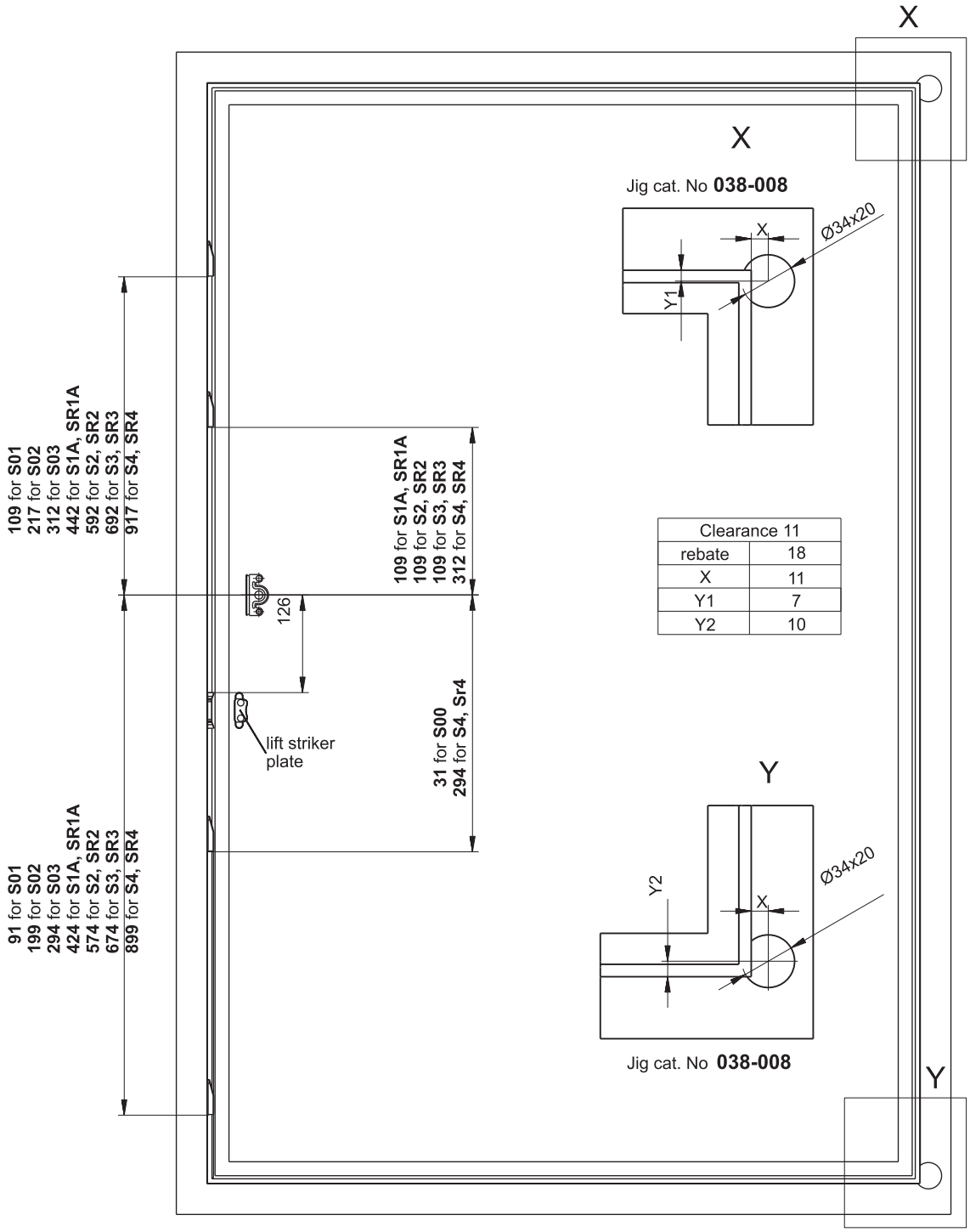

Clearance 11	
rebate	18
X	11
Y1	7
Y2	10

ASSEMBLING OF HARDWARE TwO

DRIVE GEAR M
PVC-U WINDOWS, TURN / TILT VERSION RU
LIST OF BASIC SUBASSEMBLIES

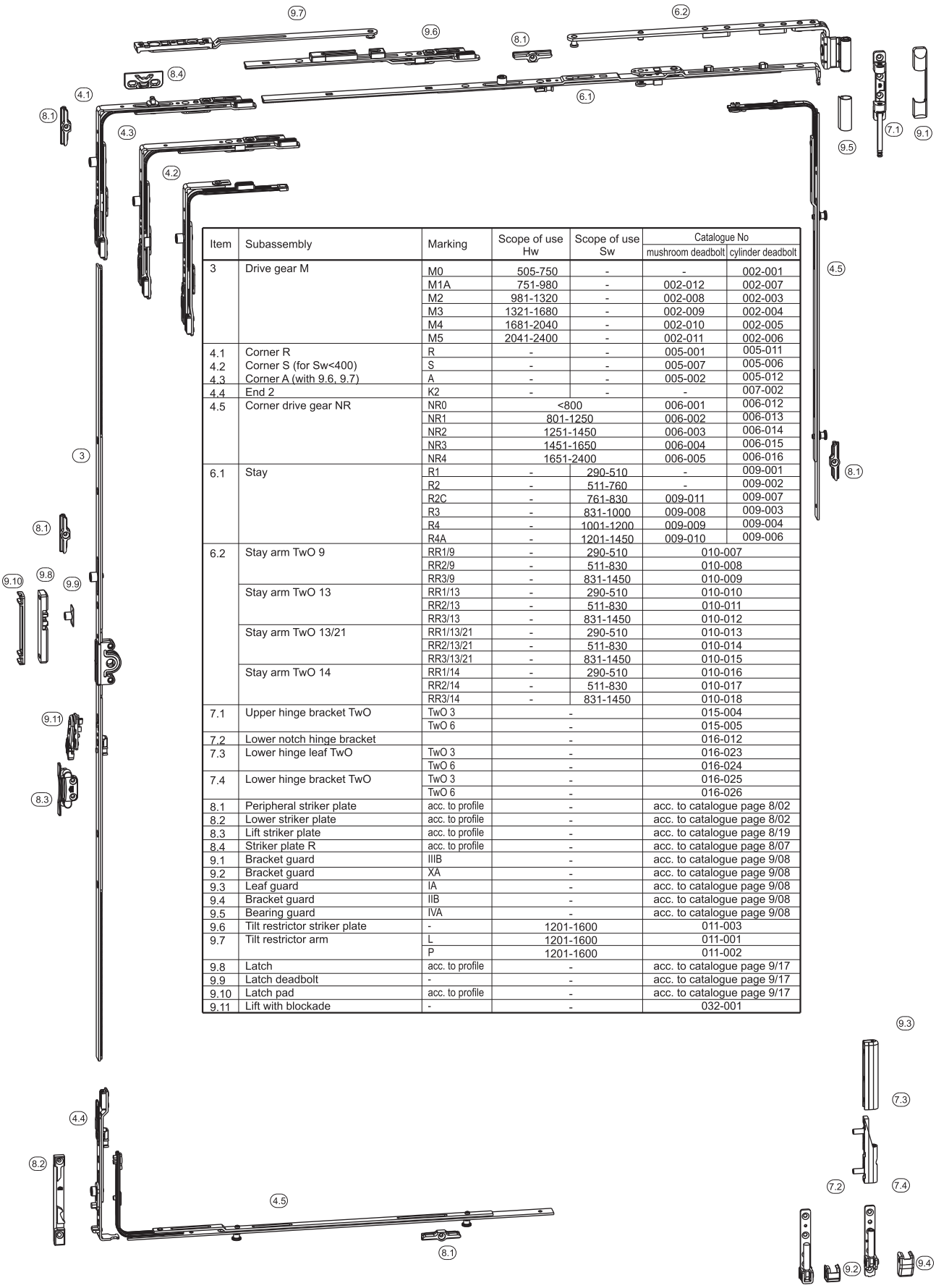

Item	Subassembly	Marking	Scope of use Hw	Scope of use Sw	Catalogue No mushroom deadbolt	Catalogue No cylinder deadbolt
3	Drive gear M	M0	505-750	-	-	002-001
		M1A	751-980	-	002-012	002-007
		M2	981-1320	-	002-008	002-003
		M3	1321-1680	-	002-009	002-004
		M4	1681-2040	-	002-010	002-005
		M5	2041-2400	-	002-011	002-006
4.1	Corner R	R	-	-	005-001	005-011
4.2	Corner S (for Sw<400)	S	-	-	005-007	005-006
4.3	Corner A (with 9.6, 9.7)	A	-	-	005-002	005-012
4.4	End 2	K2	-	-	-	007-002
4.5	Corner drive gear NR	NR0	<800		006-001	006-012
		NR1	801-1250		006-002	006-013
		NR2	1251-1450		006-003	006-014
		NR3	1451-1650		006-004	006-015
		NR4	1651-2400		006-005	006-016
6.1	Stay	R1	-	290-510	-	009-001
		R2	-	511-760	-	009-002
		R2C	-	761-830	009-011	009-007
		R3	-	831-1000	009-008	009-003
		R4	-	1001-1200	009-009	009-004
		R4A	-	1201-1450	009-010	009-006
6.2	Stay arm TwO 9	RR1/9	-	290-510	010-007	
		RR2/9	-	511-830	010-008	
		RR3/9	-	831-1450	010-009	
	Stay arm TwO 13	RR1/13	-	290-510	010-010	
		RR2/13	-	511-830	010-011	
		RR3/13	-	831-1450	010-012	
	Stay arm TwO 13/21	RR1/13/21	-	290-510	010-013	
		RR2/13/21	-	511-830	010-014	
		RR3/13/21	-	831-1450	010-015	
	Stay arm TwO 14	RR1/14	-	290-510	010-016	
		RR2/14	-	511-830	010-017	
		RR3/14	-	831-1450	010-018	
7.1	Upper hinge bracket TwO	TwO 3	-		015-004	
		TwO 6	-		015-005	
7.2	Lower notch hinge bracket		-		016-012	
7.3	Lower hinge leaf TwO	TwO 3	-		016-023	
		TwO 6	-		016-024	
7.4	Lower hinge bracket TwO	TwO 3	-		016-025	
		TwO 6	-		016-026	
8.1	Peripheral striker plate	acc. to profile	-		acc. to catalogue page 8/02	
8.2	Lower striker plate	acc. to profile	-		acc. to catalogue page 8/02	
8.3	Lift striker plate	acc. to profile	-		acc. to catalogue page 8/19	
8.4	Striker plate R	acc. to profile	-		acc. to catalogue page 8/07	
9.1	Bracket guard	IIIB	-		acc. to catalogue page 9/08	
9.2	Bracket guard	XA	-		acc. to catalogue page 9/08	
9.3	Leaf guard	IA	-		acc. to catalogue page 9/08	
9.4	Bracket guard	IIB	-		acc. to catalogue page 9/08	
9.5	Bearing guard	IVA	-		acc. to catalogue page 9/08	
9.6	Tilt restrictor striker plate	-	1201-1600		011-003	
9.7	Tilt restrictor arm	L	1201-1600		011-001	
		P	1201-1600		011-002	
9.8	Latch	acc. to profile	-		acc. to catalogue page 9/17	
9.9	Latch deadbolt	-	-		acc. to catalogue page 9/17	
9.10	Latch pad	acc. to profile	-		acc. to catalogue page 9/17	
9.11	Lift with blockade	-	-		032-001	

ASSEMBLING OF HARDWARE TwO

DRIVE GEAR M
PVC-U WINDOWS, TURN / TILT VERSION RU
ASSEMBLING OF HARDWARE ELEMENTS IN THE FRAME

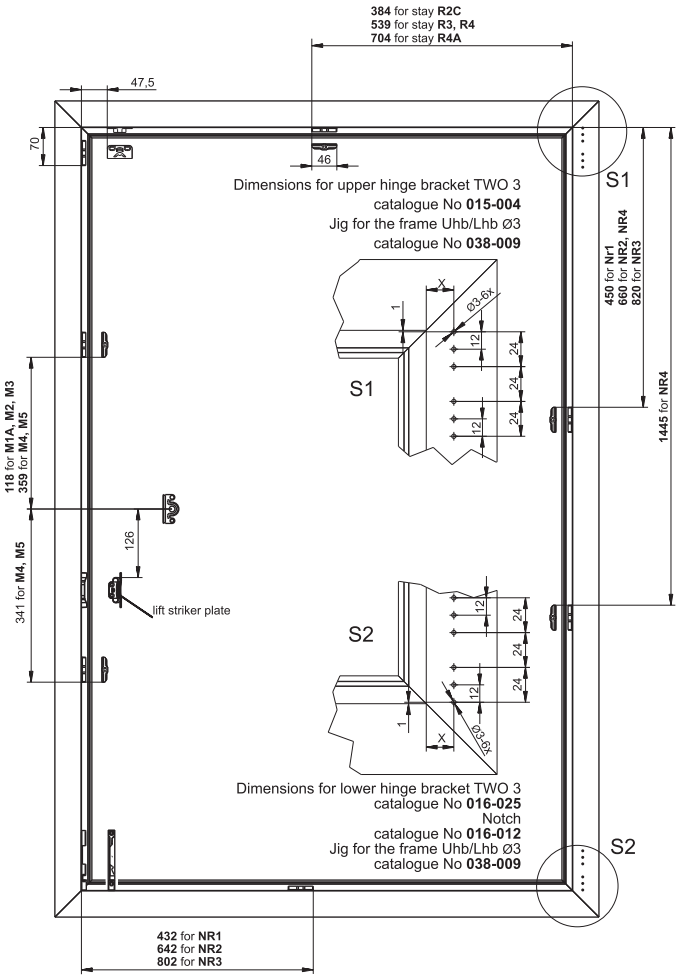

Dimensions for upper hinge bracket TWO 3
catalogue No **015-004**
Jig for the frame Uhb/Lhb Ø3
catalogue No **038-009**

Dimensions for lower hinge bracket TWO 3
catalogue No **016-025**
Notch
catalogue No **016-012**
Jig for the frame Uhb/Lhb Ø3
catalogue No **038-009**

Dimensions for upper hinge bracket TWO 6
catalogue No **015-005**
Jig for the frame Uhb/Lhb Ø6
catalogue No **038-012**

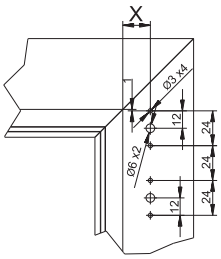

X=19 for sash rebate "20"
X=20,5 for sash rebate "21","22"

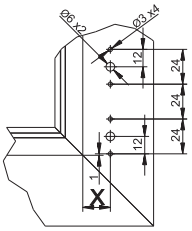

Dimensions for lower hinge bracket TWO-6
catalogue No **016-026**
Jig for the frame Uhb/Lhb Ø6
catalogue No **038-012**

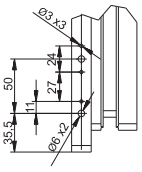

Dimensions for lower hinge leaf TwO-6
catalogue No. **016-024**
with lower notch hinge bracket
catalogue No **016-012**
Jig for the sash Lhl/TwO 6
cat. No **038-001** or **038-002** (5°) or **038-007** (7°)
(rejigged - see catalogue ROMB)

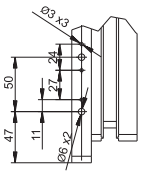

Dimensions for lower hinge leaf TwO-6
catalogue No **016-024**
with lower hinge bracket TwO-3
catalogue No **016-025**
TwO-6
catalogue No **016-026**
Jig for the sash Lhl/TwO 6
cat. No **038-001** or **038-002** (5°) or **038-007** (7°)
(see catalogue ROMB)

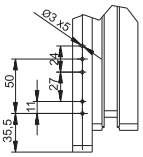

Dimensions for lower hinge leaf TwO-3
catalogue No **016-023**
with lower notch hinge bracket
catalogue No **016-012**
Jig for the sash Lhl/TwO 3
catalogue No **038-005** lub **038-006 (7°)**
(rejigged - see catalogue ROMB)

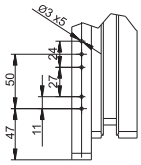

Dimensions for lower hinge leaf TwO-3
catalogue No **016-023**
with lower hinge bracket TwO-3
catalogue No **016-025**
TwO-6
catalogue No **016-026**
Jig for the sash Lhl/TwO3
cat. No **038-005** or **038-006 (7°)**
(see catalogue ROMB)

ASSEMBLING OF HARDWARE TwO

DRIVE GEAR M STRIKER PLATE PWD
PVC-U WINDOWS, TURN / TILT VERSION RU
LIST OF BASIC SUBASSEMBLIES

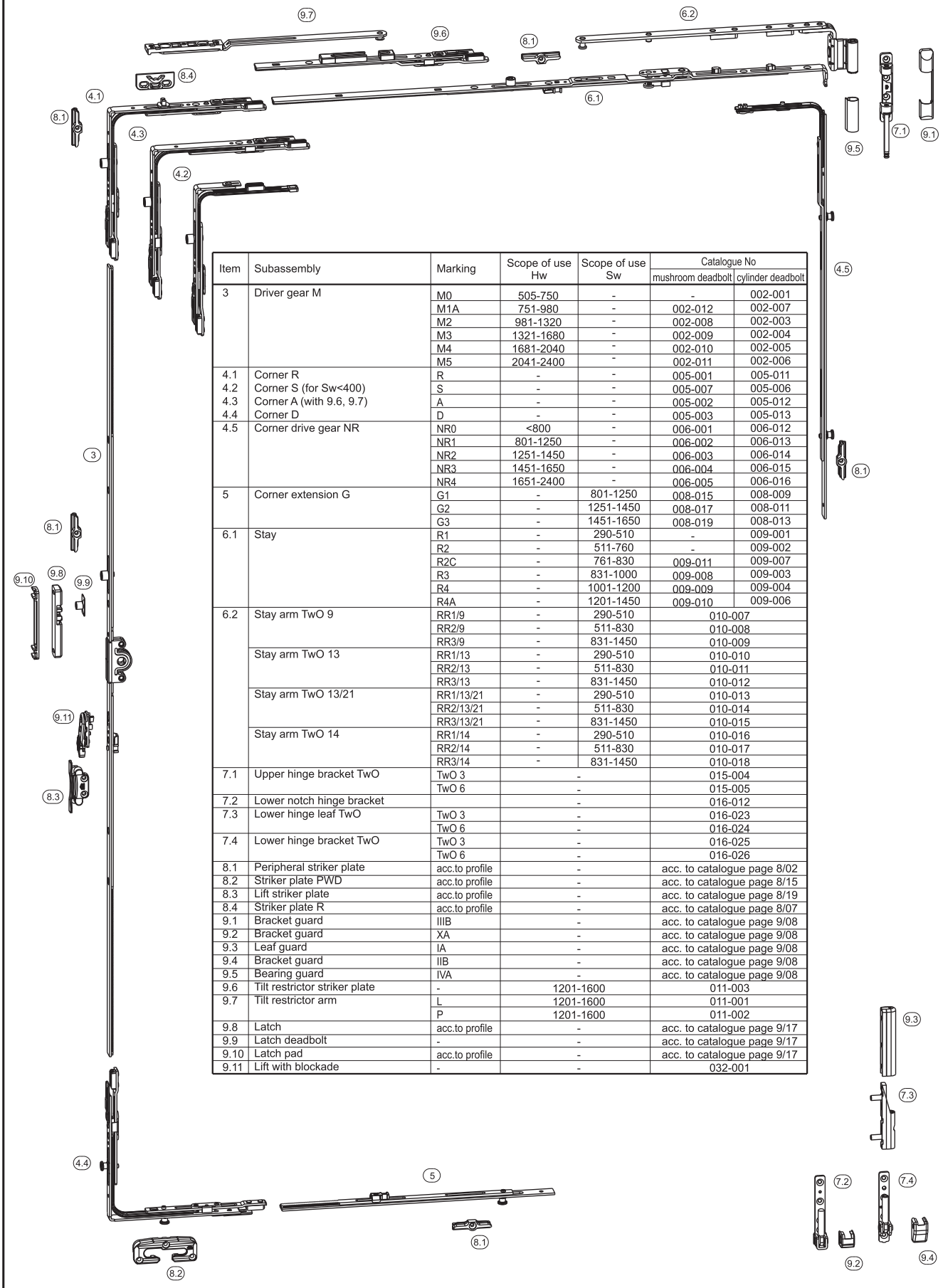

Item	Subassembly	Marking	Scope of use Hw	Scope of use Sw	Catalogue No	
					mushroom deadbolt	cylinder deadbolt
3	Driver gear M	M0	505-750	-	-	002-001
		M1A	751-980	-	002-012	002-007
		M2	981-1320	-	002-008	002-003
		M3	1321-1680	-	002-009	002-004
		M4	1681-2040	-	002-010	002-005
		M5	2041-2400	-	002-011	002-006
4.1	Corner R	R	-	-	005-001	005-011
4.2	Corner S (for Sw<400)	S	-	-	005-007	005-006
4.3	Corner A (with 9.6, 9.7)	A	-	-	005-002	005-012
4.4	Corner D	D	-	-	005-003	005-013
4.5	Corner drive gear NR	NR0	<800	-	006-001	006-012
		NR1	801-1250	-	006-002	006-013
		NR2	1251-1450	-	006-003	006-014
		NR3	1451-1650	-	006-004	006-015
		NR4	1651-2400	-	006-005	006-016
5	Corner extension G	G1	-	801-1250	008-015	008-009
		G2	-	1251-1450	008-017	008-011
		G3	-	1451-1650	008-019	008-013
6.1	Stay	R1	-	290-510	-	009-001
		R2	-	511-760	-	009-002
		R2C	-	761-830	009-011	009-007
		R3	-	831-1000	009-008	009-003
		R4	-	1001-1200	009-009	009-004
		R4A	-	1201-1450	009-010	009-006
6.2	Stay arm TwO 9	RR1/9	-	290-510	010-007	
		RR2/9	-	511-830	010-008	
		RR3/9	-	831-1450	010-009	
	Stay arm TwO 13	RR1/13	-	290-510	010-010	
		RR2/13	-	511-830	010-011	
		RR3/13	-	831-1450	010-012	
	Stay arm TwO 13/21	RR1/13/21	-	290-510	010-013	
		RR2/13/21	-	511-830	010-014	
		RR3/13/21	-	831-1450	010-015	
	Stay arm TwO 14	RR1/14	-	290-510	010-016	
		RR2/14	-	511-830	010-017	
		RR3/14	-	831-1450	010-018	
7.1	Upper hinge bracket TwO	TwO 3	-		015-004	
		TwO 6	-		015-005	
7.2	Lower notch hinge bracket		-		016-012	
7.3	Lower hinge leaf TwO	TwO 3	-		016-023	
		TwO 6	-		016-024	
7.4	Lower hinge bracket TwO	TwO 3	-		016-025	
		TwO 6	-		016-026	
8.1	Peripheral striker plate	acc.to profile	-		acc. to catalogue page 8/02	
8.2	Striker plate PWD	acc.to profile	-		acc. to catalogue page 8/15	
8.3	Lift striker plate	acc.to profile	-		acc. to catalogue page 8/19	
8.4	Striker plate R	acc.to profile	-		acc. to catalogue page 8/07	
9.1	Bracket guard	IIIB	-		acc. to catalogue page 9/08	
9.2	Bracket guard	XA	-		acc. to catalogue page 9/08	
9.3	Leaf guard	IA	-		acc. to catalogue page 9/08	
9.4	Bracket guard	IIB	-		acc. to catalogue page 9/08	
9.5	Bearing guard	IVA	-		acc. to catalogue page 9/08	
9.6	Tilt restrictor striker plate	-	1201-1600		011-003	
9.7	Tilt restrictor arm	L	1201-1600		011-001	
		P	1201-1600		011-002	
9.8	Latch	acc.to profile	-		acc. to catalogue page 9/17	
9.9	Latch deadbolt	-	-		acc. to catalogue page 9/17	
9.10	Latch pad	acc.to profile	-		acc. to catalogue page 9/17	
9.11	Lift with blockade	-	-		032-001	

ASSEMBLING OF HARDWARE TwO

DRIVE GEAR M STRIKER PLATE PWD
PVC-U WINDOWS, TURN / TILT VERSION RU
ASSEMBLING OF HARDWARE ELEMENTS IN THE FRAME

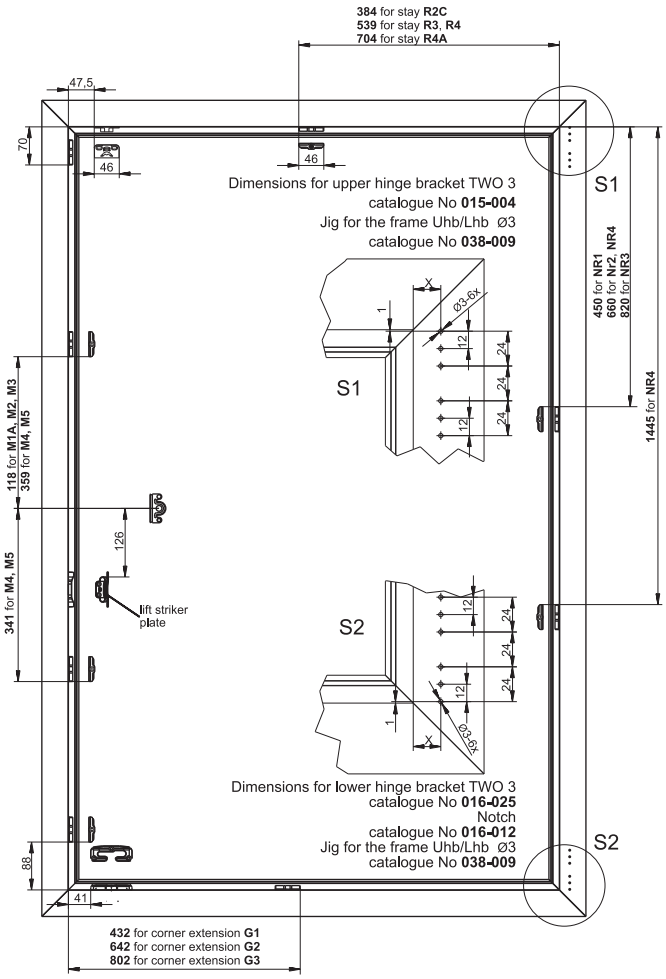

Dimensions for upper hinge bracket TWO 6
catalogue No **015-005**
Jig for the frame Uhb/Lhb Ø6
catalogue No **038-012**

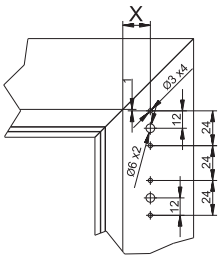

X=19 for sash rebate "20"
X=20,5 for sash rebate "21","22"

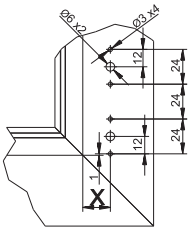

Dimensions for lower hinge bracket TWO-6
catalogue No **016-026**
Jig for the frame Uhb/Lhb Ø6
catalogue No **038-012**

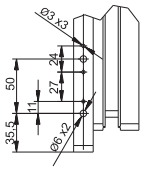

Dimensions for lower hinge leaf TwO-6
catalogue No **016-024**
with lower notch hinge bracket
catalogue No **016-012**
Jig for the sash Lhl/TwO 6
catalogue No **038-001** or **038-002** (5°) or **038-007** (7°)
(rejigged - see ROMB catalogue)

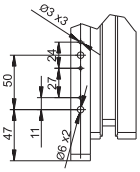

Dimensions for lower hinge leaf TwO-6
catalogue No **016-024**
with lower hinge bracket TwO-3
catalogue No **016-025**
TwO-6
catalogue No **016-026**
Jig for the sash Lhl/TwO 6
catalogue No **038-001** or **038-002** (5°) or **038-007** (7°)
(see ROMB catalogue)

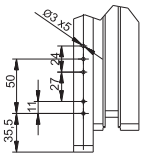

Dimensions for lower hinge leaf TwO-3
catalogue No **016-023**
with lower notch hinge bracket
catalogue No **016-012**
Jig for the sash Lhl/TwO 3
catalogue No **038-005** or **038-006 (7°)**
(rejigged - see ROMB catalogue)

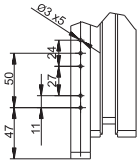

Dimensions for lower hinge leaf TwO-3
catalogue No **016-023**
with lower hinge bracket TwO-3
catalogue No **016-025**
TwO-6
catalogue No **016-026**
Jig for the sash Lhl/TwO3
catalogue or **038-005** or **038-006 (7°)**
(see ROMB catalogue)

ASSEMBLING OF HARDWARE TwO

DRIVE GEAR ZN
PVC-U WINDOWS, TURN / TILT VERSION RU
LIST OF BASIC SUBASSEMBLIES

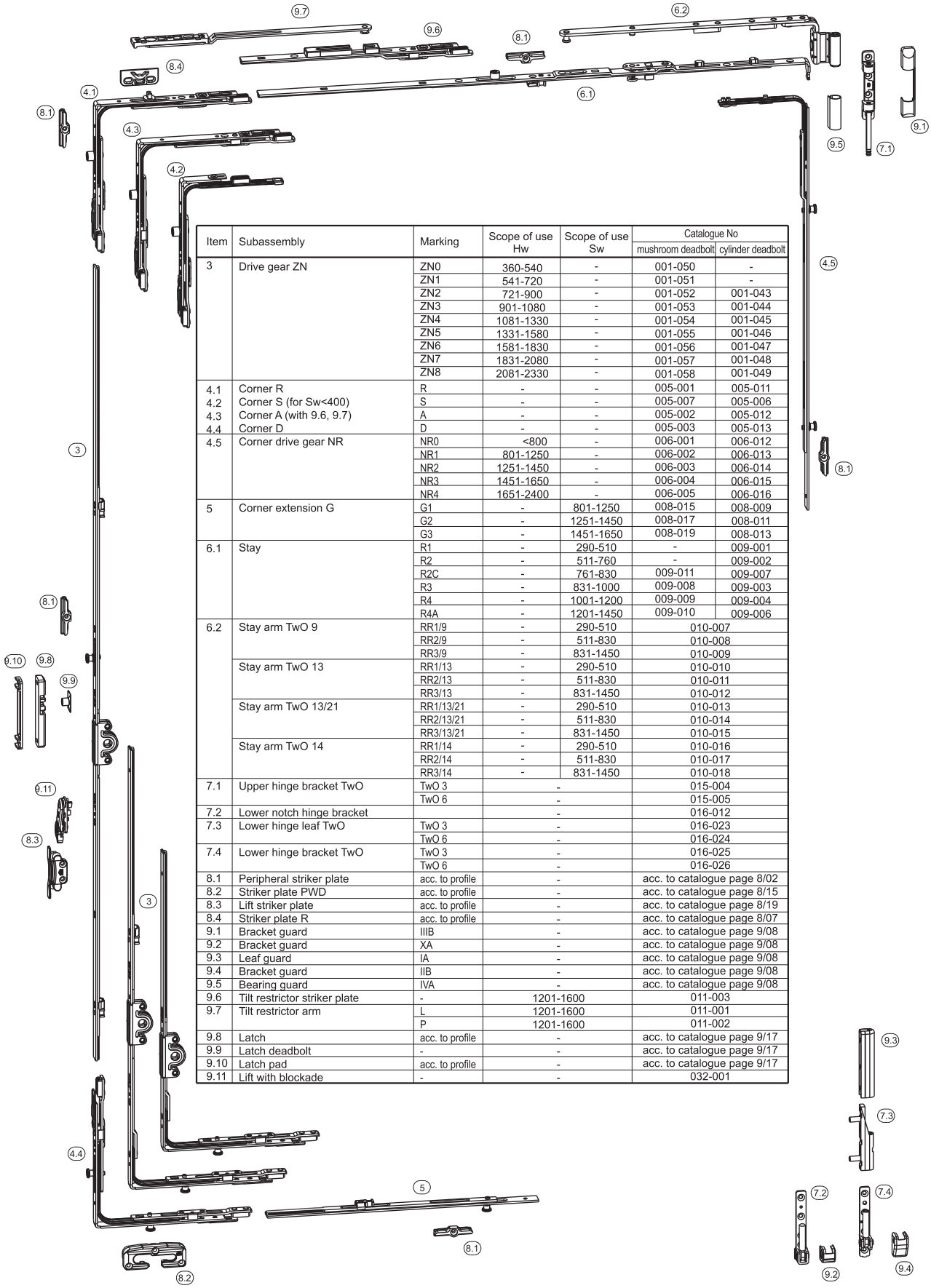

Item	Subassembly	Marking	Scope of use Hw	Scope of use Sw	Catalogue No	
					mushroom deadbolt	cylinder deadbolt
3	Drive gear ZN	ZN0	360-540	-	001-050	-
		ZN1	541-720	-	001-051	-
		ZN2	721-900	-	001-052	001-043
		ZN3	901-1080	-	001-053	001-044
		ZN4	1081-1330	-	001-054	001-045
		ZN5	1331-1580	-	001-055	001-046
		ZN6	1581-1830	-	001-056	001-047
		ZN7	1831-2080	-	001-057	001-048
		ZN8	2081-2330	-	001-058	001-049
4.1	Corner R	R	-	-	005-001	005-011
4.2	Corner S (for Sw<400)	S	-	-	005-007	005-006
4.3	Corner A (with 9.6, 9.7)	A	-	-	005-002	005-012
4.4	Corner D	D	-	-	005-003	005-013
4.5	Corner drive gear NR	NR0	<800	-	006-001	006-012
		NR1	801-1250	-	006-002	006-013
		NR2	1251-1450	-	006-003	006-014
		NR3	1451-1650	-	006-004	006-015
		NR4	1651-2400	-	006-005	006-016
5	Corner extension G	G1	-	801-1250	008-015	008-009
		G2	-	1251-1450	008-017	008-011
		G3	-	1451-1650	008-019	008-013
6.1	Stay	R1	-	290-510	-	009-001
		R2	-	511-760	-	009-002
		R2C	-	761-830	009-011	009-007
		R3	-	831-1000	009-008	009-003
		R4	-	1001-1200	009-009	009-004
		R4A	-	1201-1450	009-010	009-006
6.2	Stay arm TwO 9	RR1/9	-	290-510	010-007	
		RR2/9	-	511-830	010-008	
		RR3/9	-	831-1450	010-009	
	Stay arm TwO 13	RR1/13	-	290-510	010-010	
		RR2/13	-	511-830	010-011	
		RR3/13	-	831-1450	010-012	
	Stay arm TwO 13/21	RR1/13/21	-	290-510	010-013	
		RR2/13/21	-	511-830	010-014	
		RR3/13/21	-	831-1450	010-015	
	Stay arm TwO 14	RR1/14	-	290-510	010-016	
		RR2/14	-	511-830	010-017	
		RR3/14	-	831-1450	010-018	
7.1	Upper hinge bracket TwO	TwO 3	-		015-004	
		TwO 6	-		015-005	
7.2	Lower notch hinge bracket		-		016-012	
7.3	Lower hinge leaf TwO	TwO 3	-		016-023	
		TwO 6	-		016-024	
7.4	Lower hinge bracket TwO	TwO 3	-		016-025	
		TwO 6	-		016-026	
8.1	Peripheral striker plate	acc. to profile	-		acc. to catalogue page 8/02	
8.2	Striker plate PWD	acc. to profile	-		acc. to catalogue page 8/15	
8.3	Lift striker plate	acc. to profile	-		acc. to catalogue page 8/19	
8.4	Striker plate R	acc. to profile	-		acc. to catalogue page 8/07	
9.1	Bracket guard	IIIB	-		acc. to catalogue page 9/08	
9.2	Bracket guard	XA	-		acc. to catalogue page 9/08	
9.3	Leaf guard	IA	-		acc. to catalogue page 9/08	
9.4	Bracket guard	IIB	-		acc. to catalogue page 9/08	
9.5	Bearing guard	IVA	-		acc. to catalogue page 9/08	
9.6	Tilt restrictor striker plate	-	1201-1600		011-003	
9.7	Tilt restrictor arm	L	1201-1600		011-001	
		P	1201-1600		011-002	
9.8	Latch	acc. to profile	-		acc. to catalogue page 9/17	
9.9	Latch deadbolt	-	-		acc. to catalogue page 9/17	
9.10	Latch pad	acc. to profile	-		acc. to catalogue page 9/17	
9.11	Lift with blockade	-	-		032-001	

ASSEMBLING OF HARDWARE TwO

DRIVE GEAR M STRIKER PLATE PWD
PVC-U WINDOWS, TURN / TILT VERSION RU
ASSEMBLING OF HARDWARE ELEMENTS IN THE FRAME

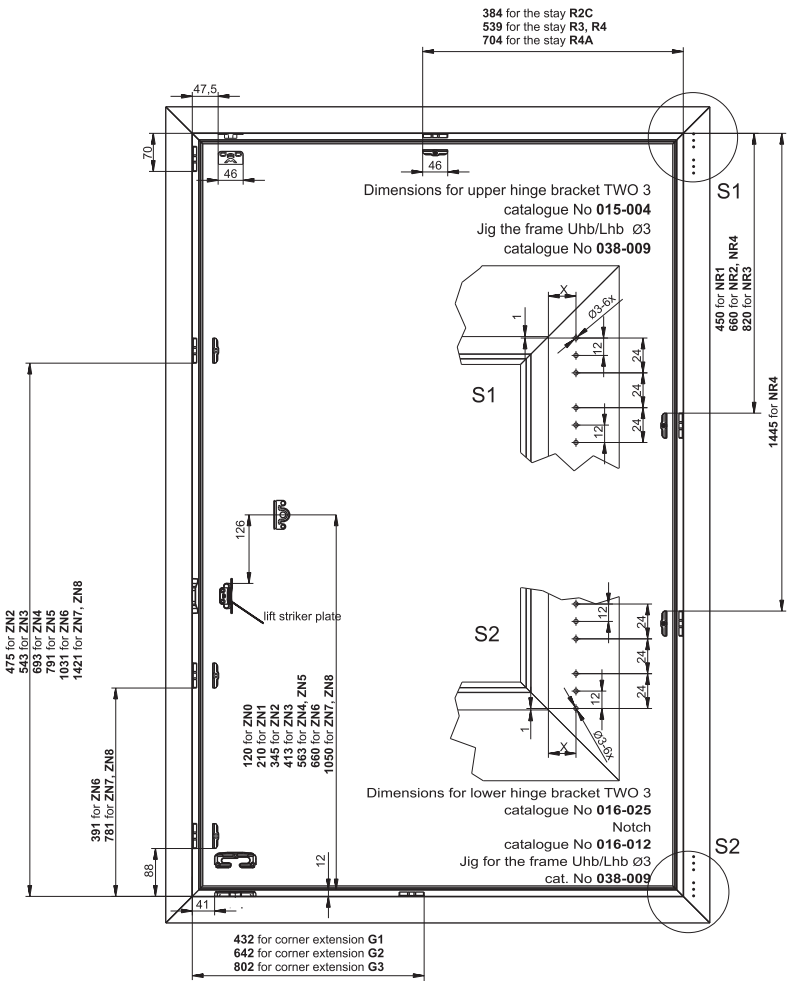

Dimensions for upper hinge bracket TWO 3
catalogue No **015-004**
Jig the frame Uhb/Lhb Ø3
catalogue No **038-009**

Dimensions for lower hinge bracket TWO 3
catalogue No **016-025**
Notch
catalogue No **016-012**
Jig for the frame Uhb/Lhb Ø3
cat. No **038-009**

Dimensions for upper hinge bracket TWO 6
catalogue No **015-005**
Jig for the frame Uhb/Lhb Ø6
catalogue No **038-012**

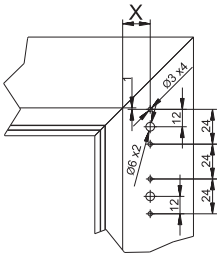

X=19 for sash rebate "20"
X=20,5 for sash rebate "21","22"

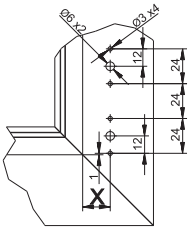

Dimensions for lower hinge bracket TWO-6
catalogue No **016-026**
Jig for the frame Uhb/Lhb Ø6
catalogue No **038-012**

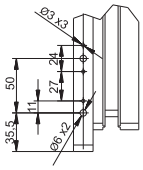

Dimensions for lower hinge leaf TwO-6
catalogue No **016-024**
with lower notch hinge bracket
catalogue No **016-012**
Jig for the sash Lhl/TwO 6
catalogue No **038-001** or **038-002** (5°) or **038-007** (7°)
(rejigged - see ROMB catalogue)

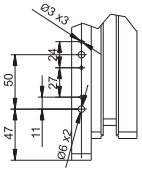

Dimensions for lower hinge leaf TwO-6
catalogue No **016-024**
with lower hinge bracket TwO-3
catalogue No **016-025**
TwO-6
catalogue No **016-026**
Jig for the sash Lhl/TwO 6
catalogue No **038-001** or **038-002** (5°) or **038-007** (7°)
(see ROMB catalogue)

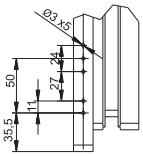

Dimensions for lower hinge leaf TwO-3
catalogue No **016-023**
with lower notch hinge bracket
catalogue No **016-012**
Jig for the sash Lhl/TwO 3
catalogue No **038-005** or **038-006 (7°)**
(rejigged - see ROMB catalogue)

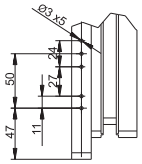

Dimensions for lower hinge leaf TwO-3
catalogue No **016-023**
with lower hinge bracket TwO-3
catalogue No **016-025**
TwO-6
catalogue No **016-026**
Jig for the sash Lhl/TwO3
catalogue No **038-005** or **038-006 (7°)**
(see ROMB catalogue)

KARO

KRAJOWE AKCESORIA I ROZWIĄZANIA OKUCIOWE

ROMB SYSTEM

ASSEMBLING OF HARDWARE TwO

DRIVE GEAR M FOOTING BM

PVC-U WINDOWS, DOUBLE WITH MOVABLE POST RU-R

LIST OF BASIC SUBASSEMBLIES

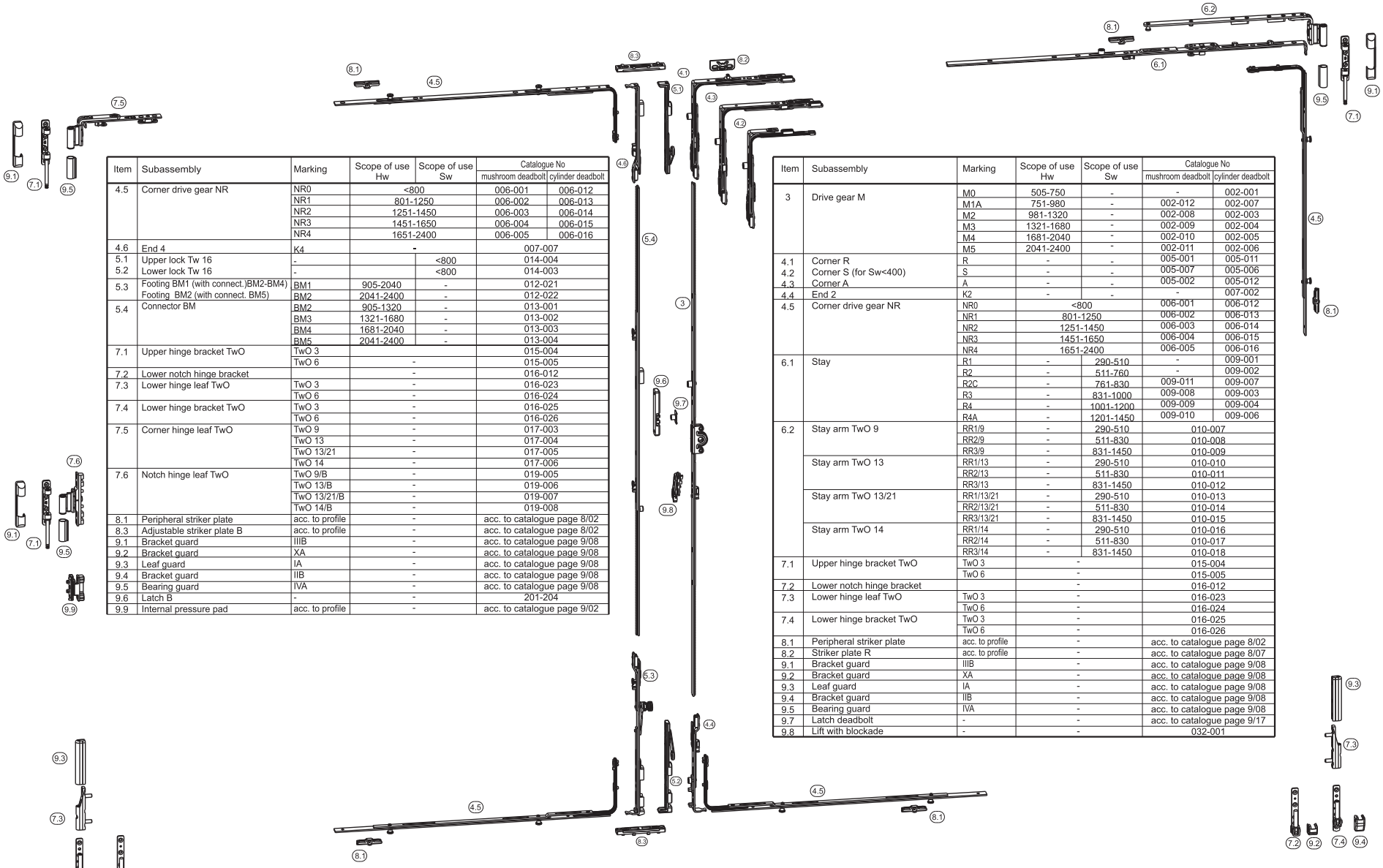

Item	Subassembly	Marking	Scope of use Hw	Scope of use Sw	Catalogue No mushroom deadbolt	Catalogue No cylinder deadbolt
3	Drive gear M	M0	505-750	-	-	002-001
		M1A	751-980	-	002-012	002-007
		M2	981-1320	-	002-008	002-003
		M3	1321-1680	-	002-009	002-004
		M4	1681-2040	-	002-010	002-005
		M5	2041-2400	-	002-011	002-006
4.1	Corner R	R	-	-	005-001	005-011
4.2	Corner S (for Sw<400)	S	-	-	005-007	005-006
4.3	Corner A	A	-	-	005-002	005-012
4.4	End 2	K2	-	-	-	007-002
4.5	Corner drive gear NR	NR0	<800		006-001	006-012
		NR1	801-1250		006-002	006-013
		NR2	1251-1450		006-003	006-014
		NR3	1451-1650		006-004	006-015
		NR4	1651-2400		006-005	006-016
6.1	Stay	R1	-	290-510	-	009-001
		R2	-	511-760	-	009-002
		R2C	-	761-830	009-011	009-007
		R3	-	831-1000	009-008	009-003
		R4	-	1001-1200	009-009	009-004
		R4A	-	1201-1450	009-010	009-006
6.2	Stay arm TwO 9	RR1/9	-	290-510	010-007	
		RR2/9	-	511-830	010-008	
		RR3/9	-	831-1450	010-009	
	Stay arm TwO 13	RR1/13	-	290-510	010-010	
		RR2/13	-	511-830	010-011	
		RR3/13	-	831-1450	010-012	
	Stay arm TwO 13/21	RR1/13/21	-	290-510	010-013	
		RR2/13/21	-	511-830	010-014	
		RR3/13/21	-	831-1450	010-015	
	Stay arm TwO 14	RR1/14	-	290-510	010-016	
		RR2/14	-	511-830	010-017	
		RR3/14	-	831-1450	010-018	
7.1	Upper hinge bracket TwO	TwO 3	-		015-004	
		TwO 6	-		015-005	
7.2	Lower notch hinge bracket		-		016-012	
7.3	Lower hinge leaf TwO	TwO 3	-		016-023	
		TwO 6	-		016-024	
7.4	Lower hinge bracket TwO	TwO 3	-		016-025	
		TwO 6	-		016-026	
8.1	Peripheral striker plate	acc. to profile	-		acc. to catalogue page 8/02	
8.2	Striker plate R	acc. to profile	-		acc. to catalogue page 8/07	
9.1	Bracket guard	IIIB	-		acc. to catalogue page 9/08	
9.2	Bracket guard	XA	-		acc. to catalogue page 9/08	
9.3	Leaf guard	IA	-		acc. to catalogue page 9/08	
9.4	Bracket guard	IIB	-		acc. to catalogue page 9/08	
9.5	Bearing guard	IVA	-		acc. to catalogue page 9/08	
9.7	Latch deadbolt	-	-		acc. to catalogue page 9/17	
9.8	Lift with blockade	-	-		032-001	

Item	Subassembly	Marking	Scope of use Hw	Scope of use Sw	Catalogue No mushroom deadbolt	Catalogue No cylinder deadbolt
4.5	Corner drive gear NR	NR0	<800		006-001	006-012
		NR1	801-1250		006-002	006-013
		NR2	1251-1450		006-003	006-014
		NR3	1451-1650		006-004	006-015
		NR4	1651-2400		006-005	006-016
4.6	End 4	K4	-		007-007	
5.1	Upper lock Tw 16	-		<800	014-004	
5.2	Lower lock Tw 16	-		<800	014-003	
5.3	Footing BM1 (with connect.)BM2-BM4)	BM1	905-2040	-	012-021	
	Footing BM2 (with connect. BM5)	BM2	2041-2400	-	012-022	
5.4	Connector BM	BM2	905-1320	-	013-001	
		BM3	1321-1680	-	013-002	
		BM4	1681-2040	-	013-003	
		BM5	2041-2400	-	013-004	
7.1	Upper hinge bracket TwO	TwO 3			015-004	
		TwO 6	-		015-005	
7.2	Lower notch hinge bracket		-		016-012	
7.3	Lower hinge leaf TwO	TwO 3	-		016-023	
		TwO 6	-		016-024	
7.4	Lower hinge bracket TwO	TwO 3	-		016-025	
		TwO 6	-		016-026	
7.5	Corner hinge leaf TwO	TwO 9	-		017-003	
		TwO 13	-		017-004	
		TwO 13/21	-		017-005	
		TwO 14	-		017-006	
7.6	Notch hinge leaf TwO	TwO 9/B	-		019-005	
		TwO 13/B	-		019-006	
		TwO 13/21/B	-		019-007	
		TwO 14/B	-		019-008	
8.1	Peripheral striker plate	acc. to profile	-		acc. to catalogue page 8/02	
8.3	Adjustable striker plate B	acc. to profile	-		acc. to catalogue page 8/02	
9.1	Bracket guard	IIIB	-		acc. to catalogue page 9/08	
9.2	Bracket guard	XA	-		acc. to catalogue page 9/08	
9.3	Leaf guard	IA	-		acc. to catalogue page 9/08	
9.4	Bracket guard	IIB	-		acc. to catalogue page 9/08	
9.5	Bearing guard	IVA	-		acc. to catalogue page 9/08	
9.6	Latch B	-	-		201-204	
9.9	Internal pressure pad	acc. to profile	-		acc. to catalogue page 9/02	

ASSEMBLING OF HARDWARE TwO

DRIVE GEAR M FOOTING BM
PVC-U WINDOWS, DOUBLE WITH MOVABLE POST RU-R
ASSEMBLING OF HARDWARE ELEMENTS IN THE FRAME

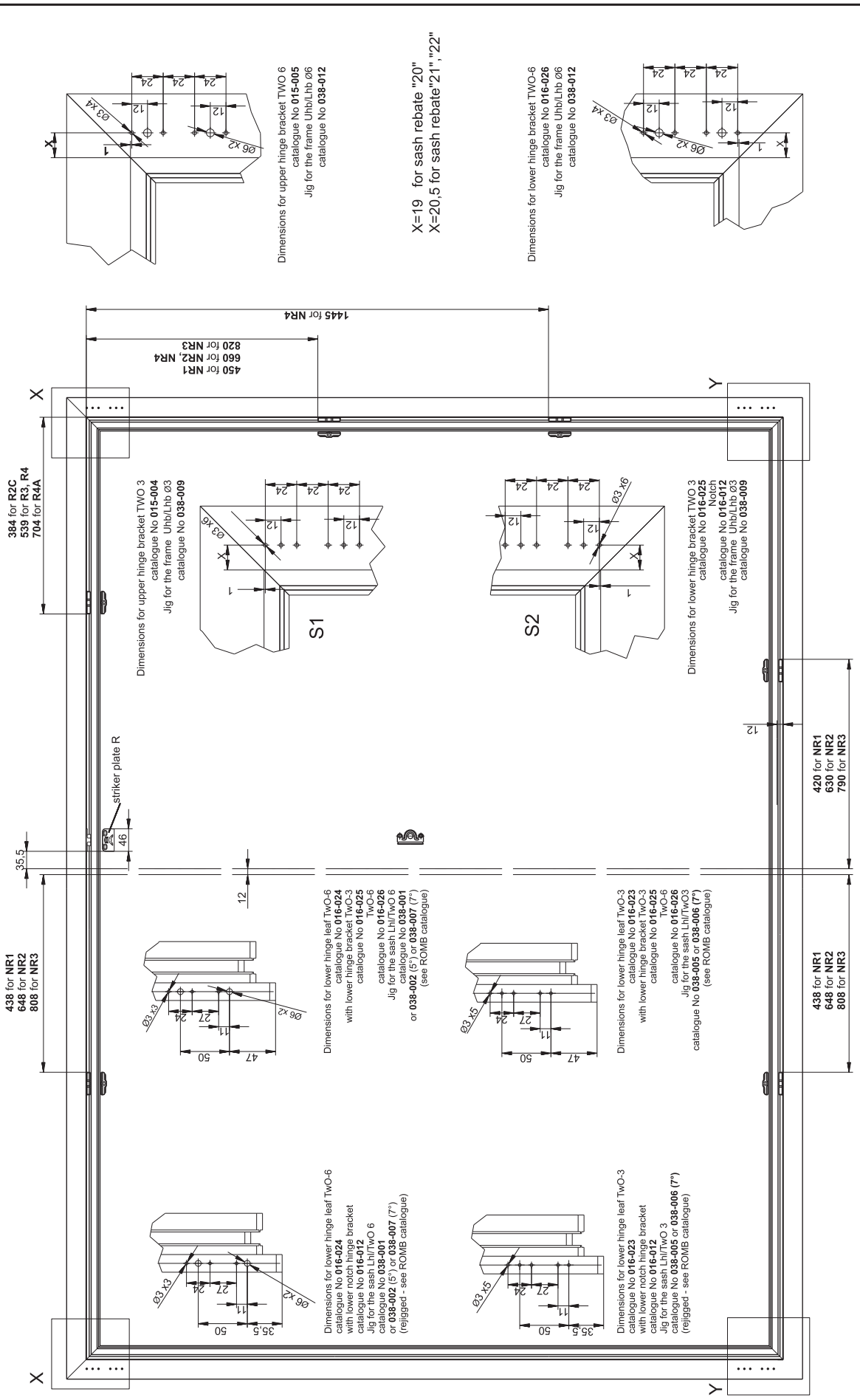

KARO

KRAJOWE AKCESORIA I ROZWIĄZANIA OKUCIOWE

ROMB SYSTEM

ASSEMBLING OF HARDWARE TwO

DRIVE GEAR M, BM

PVC-U WINDOWS, DOUBLE WITH MOVABLE POST RU-R

LIST OF BASIC SUBASSEMBLIES

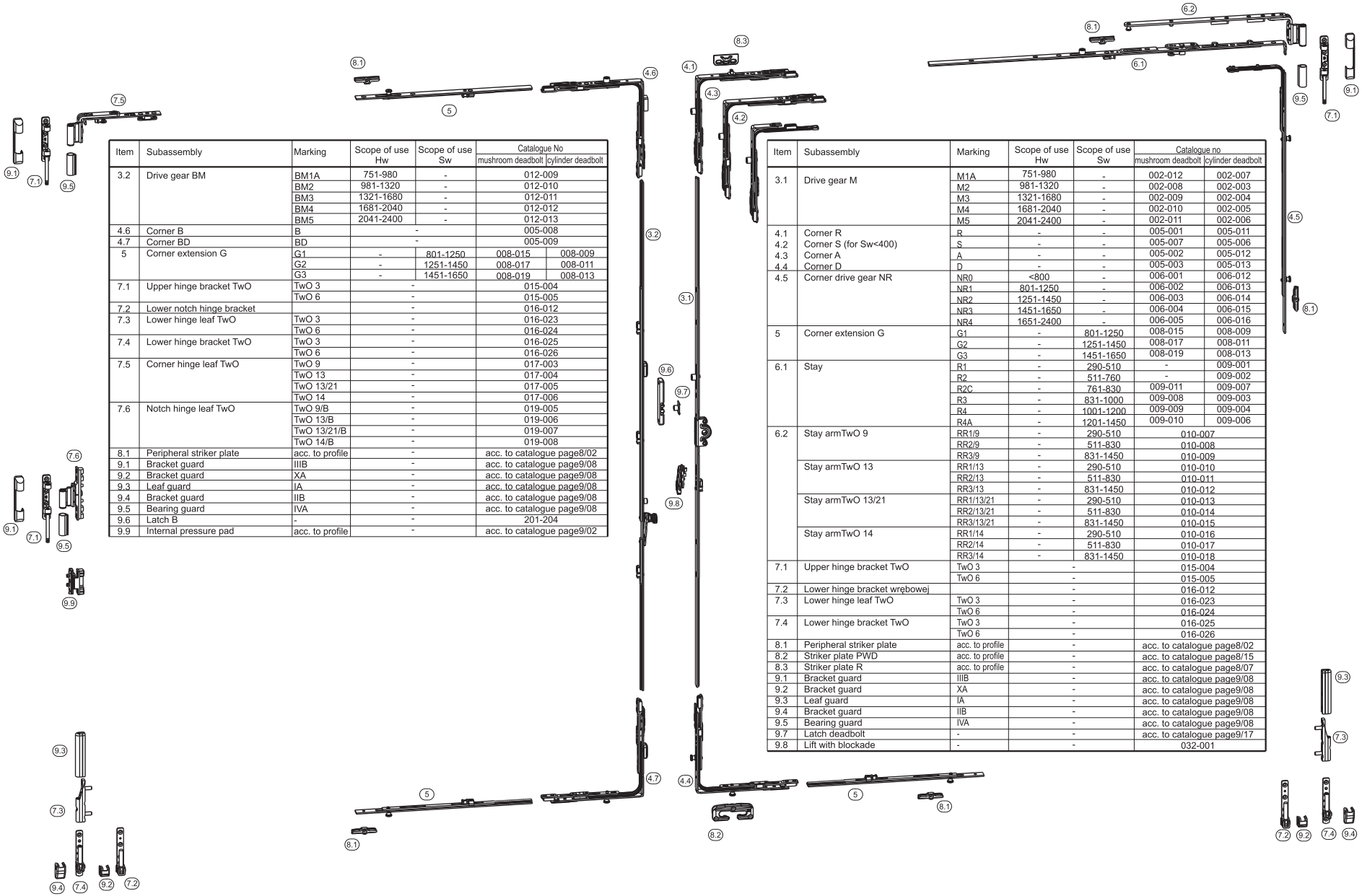

Item	Subassembly	Marking	Scope of use Hw	Scope of use Sw	Catalogue no mushroom deadbolt	Catalogue no cylinder deadbolt
3.1	Drive gear M	M1A	751-980	-	002-012	002-007
		M2	981-1320	-	002-008	002-003
		M3	1321-1680	-	002-009	002-004
		M4	1681-2040	-	002-010	002-005
		M5	2041-2400	-	002-011	002-006
4.1	Corner R	R	-	-	005-001	005-011
4.2	Corner S (for Sw<400)	S	-	-	005-007	005-006
4.3	Corner A	A	-	-	005-002	005-012
4.4	Corner D	D	-	-	005-003	005-013
4.5	Corner drive gear NR	NR0	<800	-	006-001	006-012
		NR1	801-1250	-	006-002	006-013
		NR2	1251-1450	-	006-003	006-014
		NR3	1451-1650	-	006-004	006-015
		NR4	1651-2400	-	006-005	006-016
5	Corner extension G	G1	-	801-1250	008-015	008-009
		G2	-	1251-1450	008-017	008-011
		G3	-	1451-1650	008-019	008-013
6.1	Stay	R1	-	290-510	-	009-001
		R2	-	511-760	-	009-002
		R2C	-	761-830	009-011	009-007
		R3	-	831-1000	009-008	009-003
		R4	-	1001-1200	009-009	009-004
		R4A	-	1201-1450	009-010	009-006
6.2	Stay armTwO 9	RR1/9	-	290-510	010-007	
		RR2/9	-	511-830	010-008	
		RR3/9	-	831-1450	010-009	
	Stay armTwO 13	RR1/13	-	290-510	010-010	
		RR2/13	-	511-830	010-011	
		RR3/13	-	831-1450	010-012	
	Stay armTwO 13/21	RR1/13/21	-	290-510	010-013	
		RR2/13/21	-	511-830	010-014	
		RR3/13/21	-	831-1450	010-015	
	Stay armTwO 14	RR1/14	-	290-510	010-016	
		RR2/14	-	511-830	010-017	
		RR3/14	-	831-1450	010-018	
7.1	Upper hinge bracket TwO	TwO 3	-		015-004	
		TwO 6	-		015-005	
7.2	Lower hinge bracket wrębowej		-		016-012	
7.3	Lower hinge leaf TwO	TwO 3	-		016-023	
		TwO 6	-		016-024	
7.4	Lower hinge bracket TwO	TwO 3	-		016-025	
		TwO 6	-		016-026	
8.1	Peripheral striker plate	acc. to profile	-		acc. to catalogue page8/02	
8.2	Striker plate PWD	acc. to profile	-		acc. to catalogue page8/15	
8.3	Striker plate R	acc. to profile	-		acc. to catalogue page8/07	
9.1	Bracket guard	IIIB	-		acc. to catalogue page9/08	
9.2	Bracket guard	XA	-		acc. to catalogue page9/08	
9.3	Leaf guard	IA	-		acc. to catalogue page9/08	
9.4	Bracket guard	IIB	-		acc. to catalogue page9/08	
9.5	Bearing guard	IVA	-		acc. to catalogue page9/08	
9.7	Latch deadbolt	-	-		acc. to catalogue page9/17	
9.8	Lift with blockade	-	-		032-001	

Item	Subassembly	Marking	Scope of use Hw	Scope of use Sw	Catalogue no mushroom deadbolt	Catalogue no cylinder deadbolt
3.2	Drive gear BM	BM1A	751-980	-	012-009	
		BM2	981-1320	-	012-010	
		BM3	1321-1680	-	012-011	
		BM4	1681-2040	-	012-012	
		BM5	2041-2400	-	012-013	
4.6	Corner B	B	-		005-008	
4.7	Corner BD	BD	-		005-009	
5	Corner extension G	G1	-	801-1250	008-015	008-009
		G2	-	1251-1450	008-017	008-011
		G3	-	1451-1650	008-019	008-013
7.1	Upper hinge bracket TwO	TwO 3	-		015-004	
		TwO 6	-		015-005	
7.2	Lower notch hinge bracket		-		016-012	
7.3	Lower hinge leaf TwO	TwO 3	-		016-023	
		TwO 6	-		016-024	
7.4	Lower hinge bracket TwO	TwO 3	-		016-025	
		TwO 6	-		016-026	
7.5	Corner hinge leaf TwO	TwO 9	-		017-003	
		TwO 13	-		017-004	
		TwO 13/21	-		017-005	
		TwO 14	-		017-006	
7.6	Notch hinge leaf TwO	TwO 9/B	-		019-005	
		TwO 13/B	-		019-006	
		TwO 13/21/B	-		019-007	
		TwO 14/B	-		019-008	
8.1	Peripheral striker plate	acc. to profile	-		acc. to catalogue page8/02	
9.1	Bracket guard	IIIB	-		acc. to catalogue page9/08	
9.2	Bracket guard	XA	-		acc. to catalogue page9/08	
9.3	Leaf guard	IA	-		acc. to catalogue page9/08	
9.4	Bracket guard	IIB	-		acc. to catalogue page9/08	
9.5	Bearing guard	IVA	-		acc. to catalogue page9/08	
9.6	Latch B	-	-		201-204	
9.9	Internal pressure pad	acc. to profile	-		acc. to catalogue page9/02	

ASSEMBLING OF HARDWARE TwO

DRIVE GEAR M, BM

PCV-U WINDOWS, DOUBLE WITH MOVABLE POST RU-R

ASSEMBLING OF HARDWARE ELEMENTS IN THE FRAME

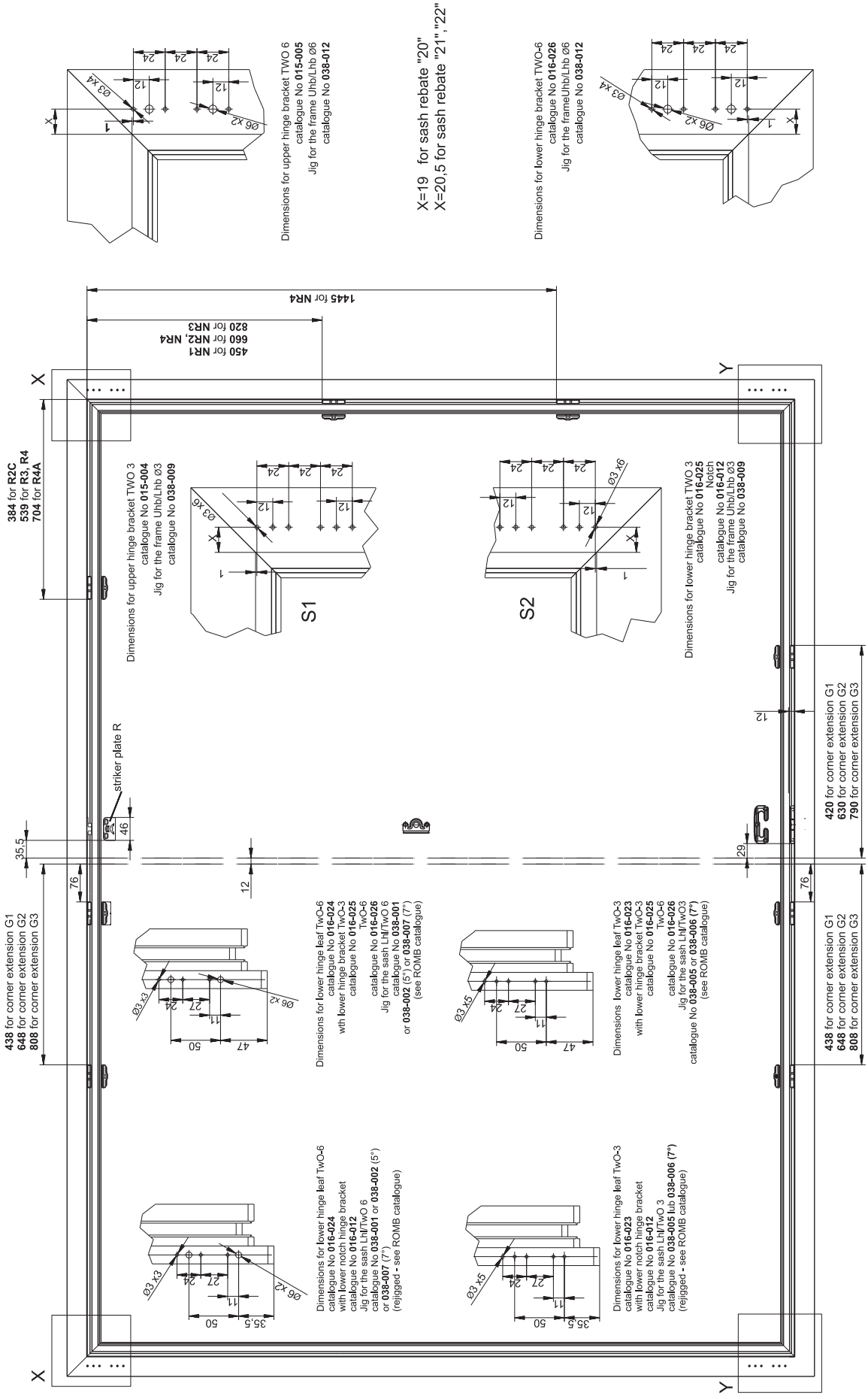

KARO

KRAJOWE AKCESORIA I ROZWIĄZANIA OKUCIOWE

ROMB SYSTEM

ASSEMBLING OF HARDWARE TwO

DRIVE GEAR ZN, BZ

PVC-U WINDOWS, DOUBLE WITH MOVABLE POST RU-R

LIST OF BASIC SUBASSEMBLIES

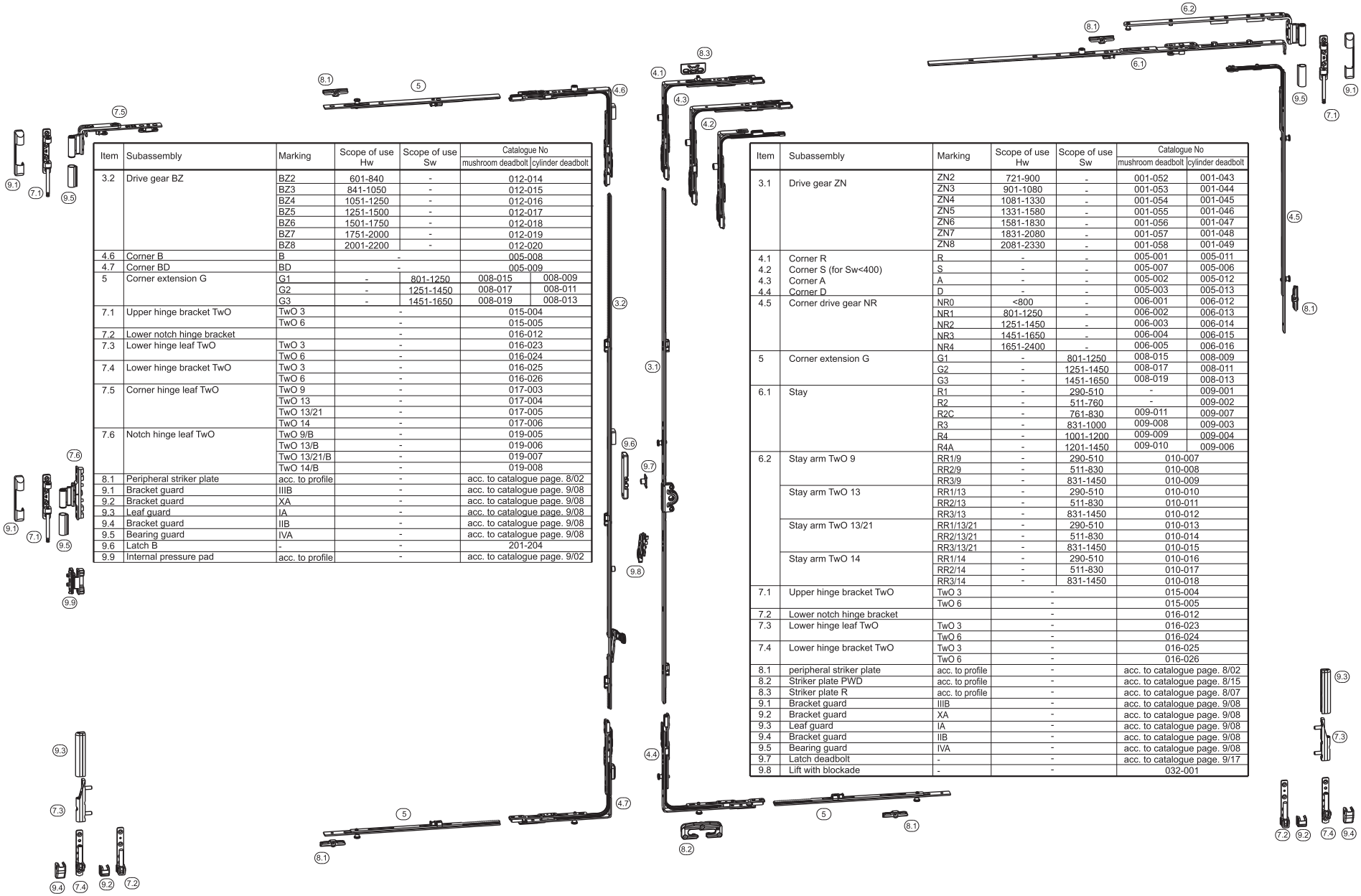

Item	Subassembly	Marking	Scope of use Hw	Scope of use Sw	Catalogue No mushroom deadbolt	Catalogue No cylinder deadbolt
3.2	Drive gear BZ	BZ2	601-840	-	012-014	
		BZ3	841-1050	-	012-015	
		BZ4	1051-1250	-	012-016	
		BZ5	1251-1500	-	012-017	
		BZ6	1501-1750	-	012-018	
		BZ7	1751-2000	-	012-019	
		BZ8	2001-2200	-	012-020	
4.6	Corner B	B	-		005-008	
4.7	Corner BD	BD	-		005-009	
5	Corner extension G	G1	-	801-1250	008-015	008-009
		G2	-	1251-1450	008-017	008-011
		G3	-	1451-1650	008-019	008-013
7.1	Upper hinge bracket TwO	TwO 3	-		015-004	
		TwO 6	-		015-005	
7.2	Lower notch hinge bracket		-		016-012	
7.3	Lower hinge leaf TwO	TwO 3	-		016-023	
		TwO 6	-		016-024	
7.4	Lower hinge bracket TwO	TwO 3	-		016-025	
		TwO 6	-		016-026	
7.5	Corner hinge leaf TwO	TwO 9	-		017-003	
		TwO 13	-		017-004	
		TwO 13/21	-		017-005	
		TwO 14	-		017-006	
7.6	Notch hinge leaf TwO	TwO 9/B	-		019-005	
		TwO 13/B	-		019-006	
		TwO 13/21/B	-		019-007	
		TwO 14/B	-		019-008	
8.1	Peripheral striker plate	acc. to profile	-		acc. to catalogue page. 8/02	
9.1	Bracket guard	IIIB	-		acc. to catalogue page. 9/08	
9.2	Bracket guard	XA	-		acc. to catalogue page. 9/08	
9.3	Leaf guard	IA	-		acc. to catalogue page. 9/08	
9.4	Bracket guard	IIB	-		acc. to catalogue page. 9/08	
9.5	Bearing guard	IVA	-		acc. to catalogue page. 9/08	
9.6	Latch B	-	-		201-204	
9.9	Internal pressure pad	acc. to profile	-		acc. to catalogue page. 9/02	

Item	Subassembly	Marking	Scope of use Hw	Scope of use Sw	Catalogue No mushroom deadbolt	Catalogue No cylinder deadbolt
3.1	Drive gear ZN	ZN2	721-900	-	001-052	001-043
		ZN3	901-1080	-	001-053	001-044
		ZN4	1081-1330	-	001-054	001-045
		ZN5	1331-1580	-	001-055	001-046
		ZN6	1581-1830	-	001-056	001-047
		ZN7	1831-2080	-	001-057	001-048
		ZN8	2081-2330	-	001-058	001-049
4.1	Corner R	R	-	-	005-001	005-011
4.2	Corner S (for Sw<400)	S	-	-	005-007	005-006
4.3	Corner A	A	-	-	005-002	005-012
4.4	Corner D	D	-	-	005-003	005-013
4.5	Corner drive gear NR	NR0	<800	-	006-001	006-012
		NR1	801-1250	-	006-002	006-013
		NR2	1251-1450	-	006-003	006-014
		NR3	1451-1650	-	006-004	006-015
		NR4	1651-2400	-	006-005	006-016
5	Corner extension G	G1	-	801-1250	008-015	008-009
		G2	-	1251-1450	008-017	008-011
		G3	-	1451-1650	008-019	008-013
6.1	Stay	R1	-	290-510	-	009-001
		R2	-	511-760	-	009-002
		R2C	-	761-830	009-011	009-007
		R3	-	831-1000	009-008	009-003
		R4	-	1001-1200	009-009	009-004
		R4A	-	1201-1450	009-010	009-006
6.2	Stay arm TwO 9	RR1/9	-	290-510	010-007	
		RR2/9	-	511-830	010-008	
		RR3/9	-	831-1450	010-009	
	Stay arm TwO 13	RR1/13	-	290-510	010-010	
		RR2/13	-	511-830	010-011	
		RR3/13	-	831-1450	010-012	
	Stay arm TwO 13/21	RR1/13/21	-	290-510	010-013	
		RR2/13/21	-	511-830	010-014	
		RR3/13/21	-	831-1450	010-015	
	Stay arm TwO 14	RR1/14	-	290-510	010-016	
		RR2/14	-	511-830	010-017	
		RR3/14	-	831-1450	010-018	
7.1	Upper hinge bracket TwO	TwO 3	-		015-004	
		TwO 6	-		015-005	
7.2	Lower notch hinge bracket		-		016-012	
7.3	Lower hinge leaf TwO	TwO 3	-		016-023	
		TwO 6	-		016-024	
7.4	Lower hinge bracket TwO	TwO 3	-		016-025	
		TwO 6	-		016-026	
8.1	peripheral striker plate	acc. to profile	-		acc. to catalogue page. 8/02	
8.2	Striker plate PWD	acc. to profile	-		acc. to catalogue page. 8/15	
8.3	Striker plate R	acc. to profile	-		acc. to catalogue page. 8/07	
9.1	Bracket guard	IIIB	-		acc. to catalogue page. 9/08	
9.2	Bracket guard	XA	-		acc. to catalogue page. 9/08	
9.3	Leaf guard	IA	-		acc. to catalogue page. 9/08	
9.4	Bracket guard	IIB	-		acc. to catalogue page. 9/08	
9.5	Bearing guard	IVA	-		acc. to catalogue page. 9/08	
9.7	Latch deadbolt	-	-		acc. to catalogue page. 9/17	
9.8	Lift with blockade	-	-		032-001	

ASSEMBLING OF HARDWARE TwO

DRIVE GEAR ZN, BZ

PVC-U WINDOWS, DOUBLE WITH MOVABLE POST RU-R

ASSEMBLING OF HARDWARE ELEMENTS IN THE FRAME

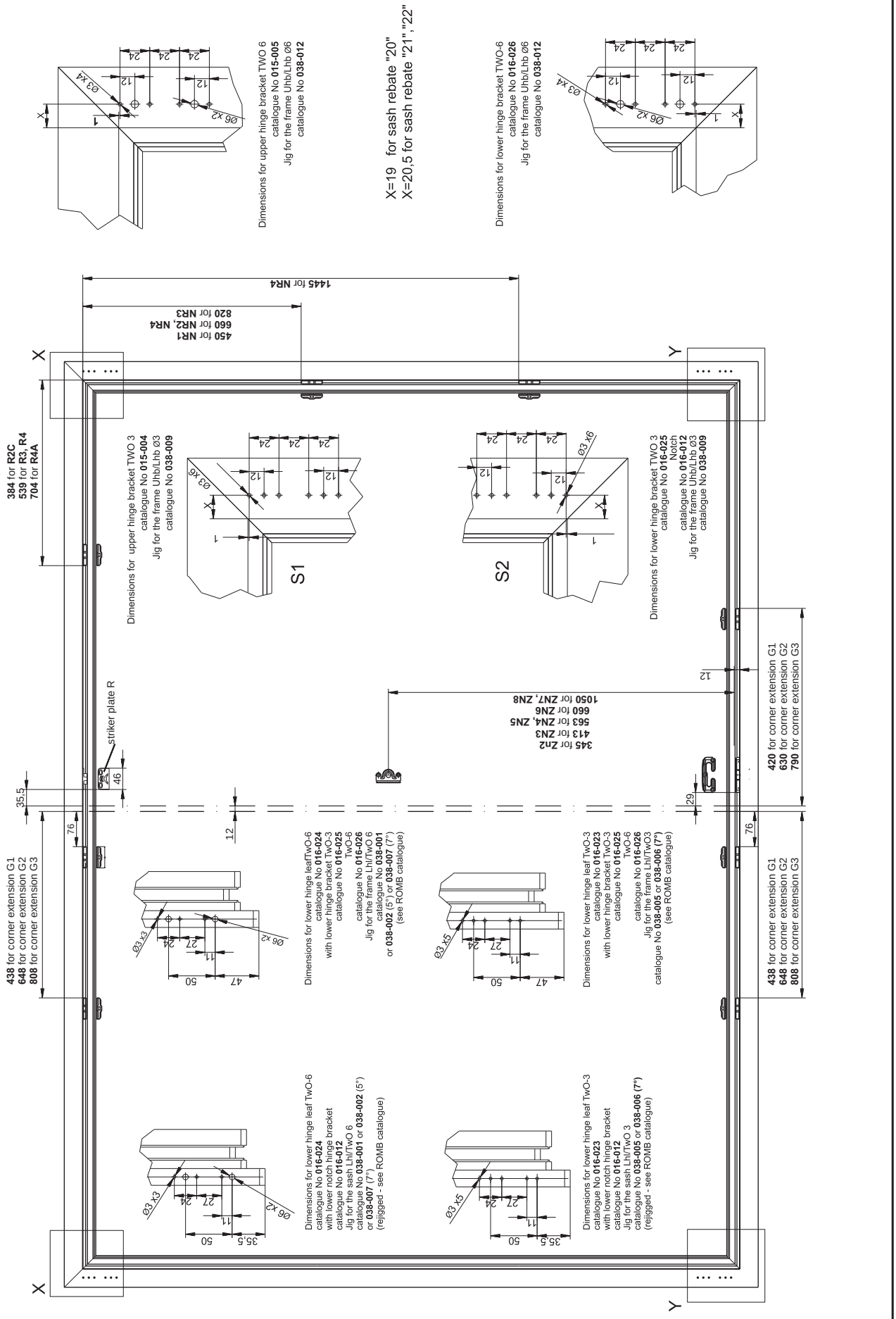

ASSEMBLING OF HARDWARE TwO

DRIVE GEAR M
PVC-U WINDOWS, TURN VERSION R
LIST OF BASIC SUBASSEMBLIES

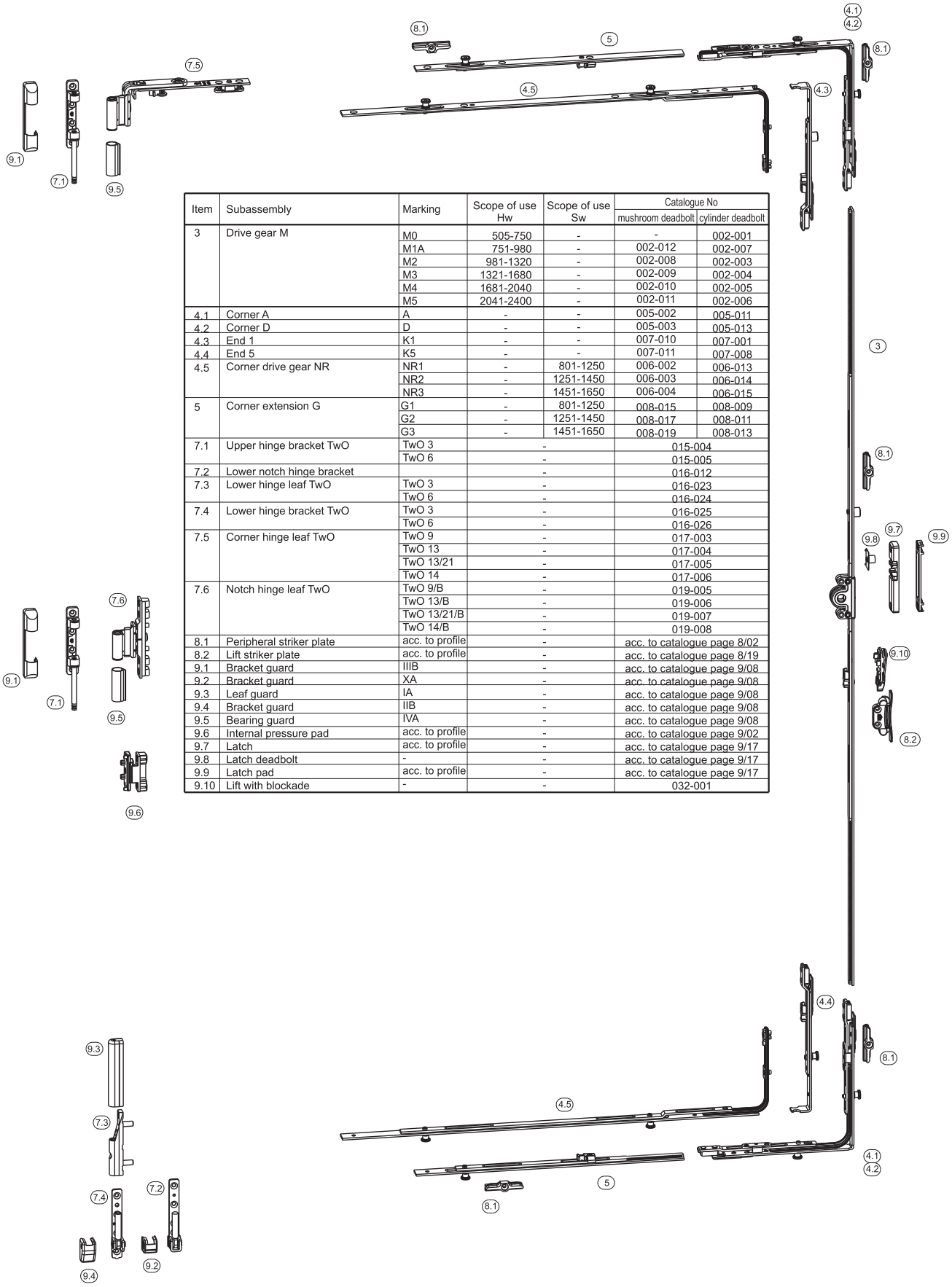

Item	Subassembly	Marking	Scope of use Hw	Scope of use Sw	Catalogue No mushroom deadbolt	Catalogue No cylinder deadbolt
3	Drive gear M	M0	505-750	-	-	002-001
		M1A	751-980	-	002-012	002-007
		M2	981-1320	-	002-008	002-003
		M3	1321-1680	-	002-009	002-004
		M4	1681-2040	-	002-010	002-005
		M5	2041-2400	-	002-011	002-006
4.1	Corner A	A	-	-	005-002	005-011
4.2	Corner D	D	-	-	005-003	005-013
4.3	End 1	K1	-	-	007-010	007-001
4.4	End 5	K5	-	-	007-011	007-008
4.5	Corner drive gear NR	NR1	-	801-1250	006-002	006-013
		NR2	-	1251-1450	006-003	006-014
		NR3	-	1451-1650	006-004	006-015
5	Corner extension G	G1	-	801-1250	008-015	008-009
		G2	-	1251-1450	008-017	008-011
		G3	-	1451-1650	008-019	008-013
7.1	Upper hinge bracket TwO	TwO 3	-		015-004	
		TwO 6	-		015-005	
7.2	Lower notch hinge bracket		-		016-012	
7.3	Lower hinge leaf TwO	TwO 3	-		016-023	
		TwO 6	-		016-024	
7.4	Lower hinge bracket TwO	TwO 3	-		016-025	
		TwO 6	-		016-026	
7.5	Corner hinge leaf TwO	TwO 9	-		017-003	
		TwO 13	-		017-004	
		TwO 13/21	-		017-005	
		TwO 14	-		017-006	
7.6	Notch hinge leaf TwO	TwO 9/B	-		019-005	
		TwO 13/B	-		019-006	
		TwO 13/21/B	-		019-007	
		TwO 14/B	-		019-008	
8.1	Peripheral striker plate	acc. to profile	-		acc. to catalogue page 8/02	
8.2	Lift striker plate	acc. to profile	-		acc. to catalogue page 8/19	
9.1	Bracket guard	IIIB	-		acc. to catalogue page 9/08	
9.2	Bracket guard	XA	-		acc. to catalogue page 9/08	
9.3	Leaf guard	IA	-		acc. to catalogue page 9/08	
9.4	Bracket guard	IIB	-		acc. to catalogue page 9/08	
9.5	Bearing guard	IVA	-		acc. to catalogue page 9/08	
9.6	Internal pressure pad	acc. to profile	-		acc. to catalogue page 9/02	
9.7	Latch	acc. to profile	-		acc. to catalogue page 9/17	
9.8	Latch deadbolt	-	-		acc. to catalogue page 9/17	
9.9	Latch pad	acc. to profile	-		acc. to catalogue page 9/17	
9.10	Lift with blockade	-	-		032-001	

ASSEMBLING OF HARDWARE TwO

DRIVE GEAR M
PVC-U WINDOWS, TURN VERSION R
ASSEMBLING OF HARDWARE ELEMENTS IN THE FRAME

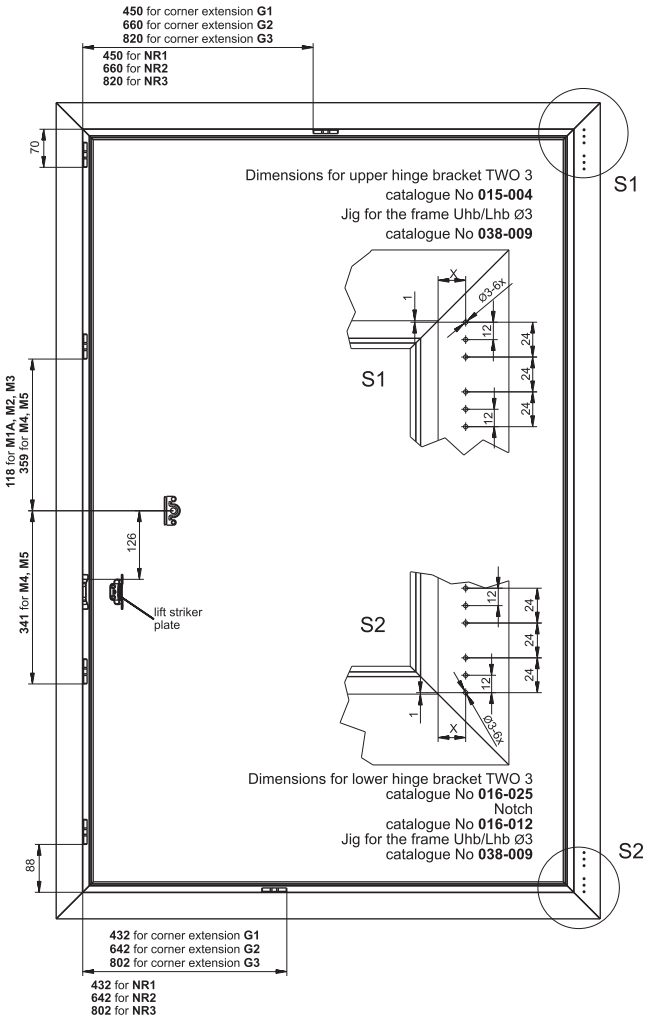

Dimensions for upper hinge bracket TWO 6
catalogue No **015-005**
Jig for the frame Uhb/Lhb Ø6
catalogue No **038-012**

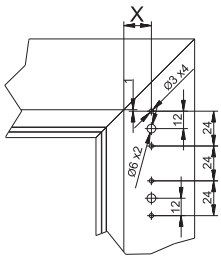

X=19 for sash rebate "20"
X=20,5 for sash rebate "21","22"

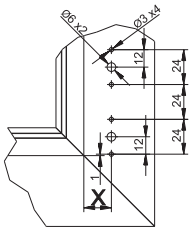

Dimensions for lower hinge bracket TWO-6
catalogue No **016-026**
Jig for the frame Uhb/Lhb Ø6
catalogue No **038-012**

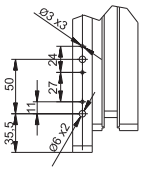

Dimensions for lower hinge leaf TwO-6
catalogue No **016-024**
with lower notch hinge bracket
catalogue No **016-012**
Jig for the sash Lhl/TwO 6
catalogue No **038-001** or **038-002** (5°) or **038-007** (7°)
(rejigged - see ROMB catalogue)

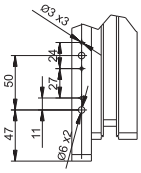

Dimensions for lower hinge leaf TwO-6
catalogue No **016-024**
with lower hinge bracket TwO-3
catalogue No **016-025**
TwO-6
catalogue No **016-026**
Jig for the sash Lhl/TwO 6
catalogue No **038-001** or **038-002** (5°) or **038-007** (7°)
(see ROMB catalogue)

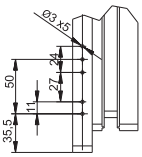

Dimensions for lower hinge leaf TwO-3
catalogue No **016-023**
with lower notch hinge bracket
catalogue No **016-012**
Jig for the sash Lhl/TwO 3
catalogue No **038-005** or **038-006 (7°)**
(rejigged - see ROMB catalogue)

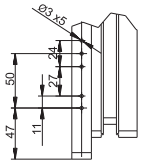

Dimensions for lower hinge leaf TwO-3
catalogue No **016-023**
with lower hinge bracket TwO-3
catalogue No **016-025**
TwO-6
catalogue No **016-026**
Jig for the sash Lhl/TwO3
catalogue No **038-005** or **038-006 (7°)**
(see ROMB catalogue)

ASSEMBLING OF HARDWARE TwO

DRIVE GEAR ZN
PVC-U WINDOWS, TURN VERSION R
LIST OF BASIC SUBASSEMBLIES

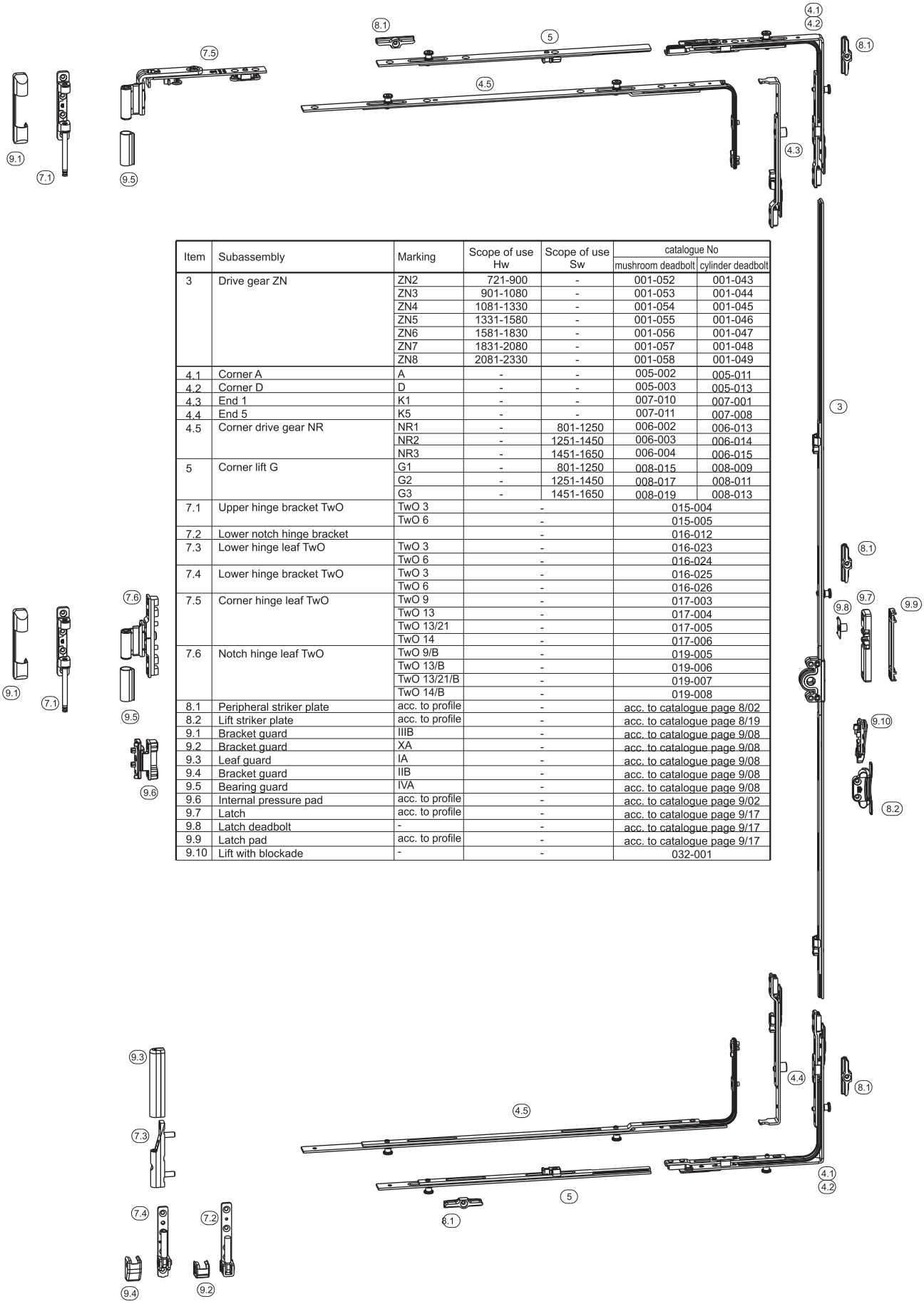

Item	Subassembly	Marking	Scope of use Hw	Scope of use Sw	catalogue No	
					mushroom deadbolt	cylinder deadbolt
3	Drive gear ZN	ZN2	721-900	-	001-052	001-043
		ZN3	901-1080	-	001-053	001-044
		ZN4	1081-1330	-	001-054	001-045
		ZN5	1331-1580	-	001-055	001-046
		ZN6	1581-1830	-	001-056	001-047
		ZN7	1831-2080	-	001-057	001-048
		ZN8	2081-2330	-	001-058	001-049
4.1	Corner A	A	-	-	005-002	005-011
4.2	Corner D	D	-	-	005-003	005-013
4.3	End 1	K1	-	-	007-010	007-001
4.4	End 5	K5	-	-	007-011	007-008
4.5	Corner drive gear NR	NR1	-	801-1250	006-002	006-013
		NR2	-	1251-1450	006-003	006-014
		NR3	-	1451-1650	006-004	006-015
5	Corner lift G	G1	-	801-1250	008-015	008-009
		G2	-	1251-1450	008-017	008-011
		G3	-	1451-1650	008-019	008-013
7.1	Upper hinge bracket TwO	TwO 3	-		015-004	
		TwO 6	-		015-005	
7.2	Lower notch hinge bracket		-		016-012	
7.3	Lower hinge leaf TwO	TwO 3	-		016-023	
		TwO 6	-		016-024	
7.4	Lower hinge bracket TwO	TwO 3	-		016-025	
		TwO 6	-		016-026	
7.5	Corner hinge leaf TwO	TwO 9	-		017-003	
		TwO 13	-		017-004	
		TwO 13/21	-		017-005	
		TwO 14	-		017-006	
7.6	Notch hinge leaf TwO	TwO 9/B	-		019-005	
		TwO 13/B	-		019-006	
		TwO 13/21/B	-		019-007	
		TwO 14/B	-		019-008	
8.1	Peripheral striker plate	acc. to profile	-		acc. to catalogue page 8/02	
8.2	Lift striker plate	acc. to profile	-		acc. to catalogue page 8/19	
9.1	Bracket guard	IIIB	-		acc. to catalogue page 9/08	
9.2	Bracket guard	XA	-		acc. to catalogue page 9/08	
9.3	Leaf guard	IA	-		acc. to catalogue page 9/08	
9.4	Bracket guard	IIB	-		acc. to catalogue page 9/08	
9.5	Bearing guard	IVA	-		acc. to catalogue page 9/08	
9.6	Internal pressure pad	acc. to profile	-		acc. to catalogue page 9/02	
9.7	Latch	acc. to profile	-		acc. to catalogue page 9/17	
9.8	Latch deadbolt	-	-		acc. to catalogue page 9/17	
9.9	Latch pad	acc. to profile	-		acc. to catalogue page 9/17	
9.10	Lift with blockade	-	-		032-001	

ASSEMBLING OF HARDWARE TwO

DRIVE GEAR ZN
PVC-U WINDOWS, TURN VERSION R
ASSEMBLING OF HARDWARE ELEMENTS IN THE FRAME

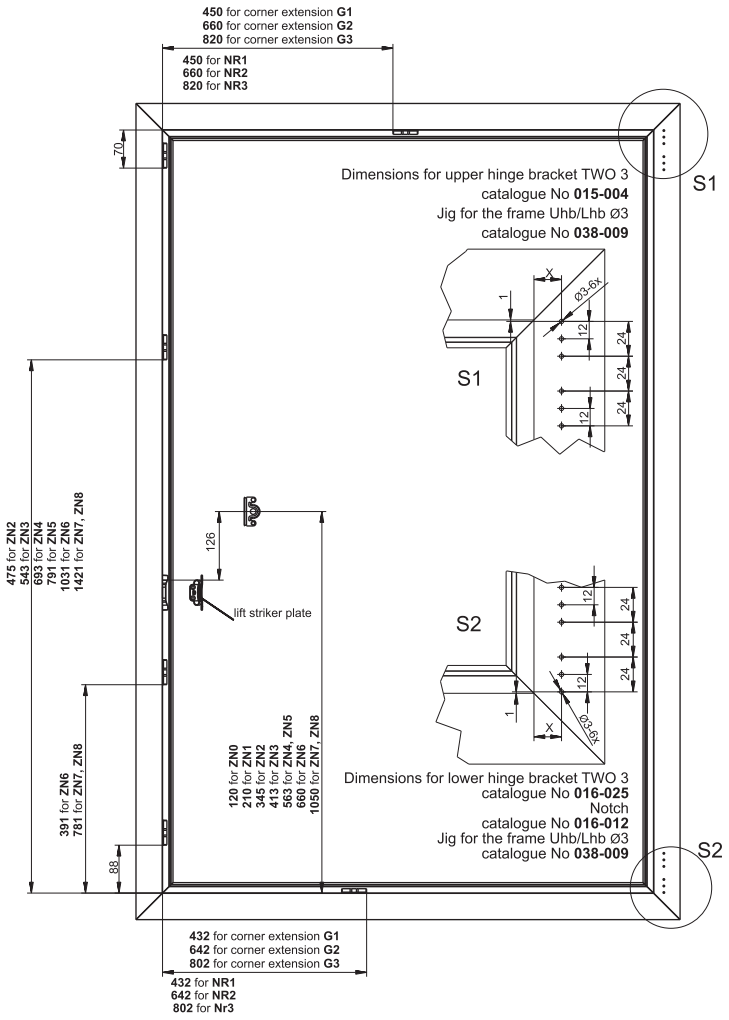

Dimensions for upper hinge bracket TWO 3
catalogue No **015-004**
Jig for the frame Uhb/Lhb Ø3
catalogue No **038-009**

Dimensions for upper hinge bracket TWO 6
catalogue No **015-005**
Jig for the frame Uhb/Lhb Ø6
catalogue No **038-012**

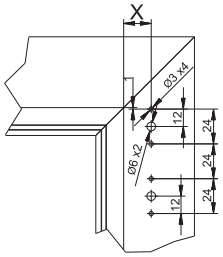

X=19 for sash rebate "20"
X=20,5 for sash rebate "21","22"

Dimensions for lower hinge bracket TWO 3
catalogue No **016-025**
Notch
catalogue No **016-012**
Jig for the frame Uhb/Lhb Ø3
catalogue No **038-009**

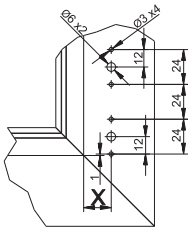

Dimensions for lower hinge bracket TWO-6
catalogue No **016-026**
Jig for the frame Uhb/Lhb Ø6
catalogue No **038-012**

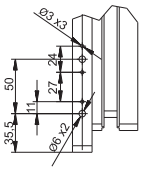

Dimensions for lower hinge leaf TwO-6
catalogue No **016-024**
with lower notch hinge bracket
catalogue No **016-012**
Jig for the sash Lhl/TwO 6
catalogue No **038-001** or **038-002** (5°) or **038-007** (7°)
(rejigged - see ROMB catalogue)

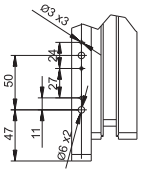

Dimensions for lower hinge leaf TwO-6
catalogue No **016-024**
with lower hinge bracket TwO-3
catalogue No **016-025**
TwO-6
catalogue No **016-026**
Jig for the sash Lhl/TwO 6
catalogue No **038-001** or **038-002** (5°) or **038-007** (7°)
(see ROMB catalogue)

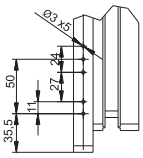

Dimensions for lower hinge leaf TwO-3
catalogue No **016-023**
with lower notch hinge bracket
catalogue No **016-012**
Jig for the sash Lhl/TwO 3
catalogue No **038-005** or **038-006 (7°)**
(rejigged - see ROMB catalogue)

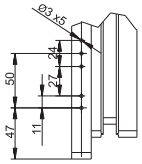

Dimensions for lower hinge leaf TwO-3
catalogue No **016-023**
with lower hinge bracket TwO-3
catalogue No **016-025**
TwO-6
catalogue No **016-026**
Jig for the Lhl/TwO3
catalogue No **038-005** or **038-006 (7°)**
(see ROMB catalogue)

ASSEMBLING OF HARDWARE TwO

DRIVE GEAR ZNR
PVC-U WINDOWS, TURN WINDOWS R
LIST OF BASIC SUBASSEMBLIES

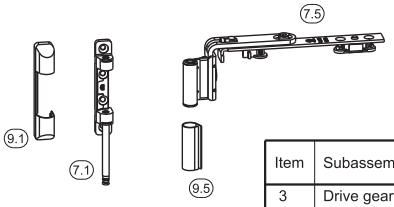

Item	Subassembly	Marking	Scope of use Hw	Scope of use Sw	Catalogue No	
					mushroom deadbolt	cylinder deadbolt
3	Drive gear ZNR	ZNR0	265-540	-	001-068	001-059
		ZNR1	541-720	-	001-069	001-060
		ZNR2	721-900	-	001-070	001-061
		ZNR3	901-1080	-	001-071	001-062
		ZNR4	1081-1330	-	001-072	001-063
		ZNR5	1331-1580	-	001-073	001-064
		ZNR6	1581-1830	-	001-074	001-065
		ZNR7	1831-2080	-	001-075	001-066
		ZNR8	2081-2330	-	001-076	001-067
7.1	Upper hinge bracket TwO	TwO 3	-		015-004	
		TwO 6	-		015-005	
7.2	Lower notch hinge bracket		-		016-012	
7.3	Lower hinge leaf TwO	TwO 3	-		016-023	
		TwO 6	-		016-024	
7.4	Lower hinge bracket TwO	TwO 3	-		016-025	
		TwO 6	-		016-026	
7.5	Corner hinge leaf TwO	TwO 9	-		017-003	
		TwO 13	-		017-004	
		TwO 13/21	-		017-005	
		TwO 14	-		017-006	
7.6	Notch hinge leaf TwO	TwO 9/B	-		019-005	
		TwO 13/B	-		019-006	
		TwO 13/21/B	-		019-007	
		TwO 14/B	-		019-008	
8.1	Peripheral striker plate	acc. to profile	-		acc. to catalogue page 8/02	
8.2	Lift striker plate	acc. to profile	-		acc. to catalogue page 8/19	
9.1	Bracket guard	IIIB	-		acc. to catalogue page 9/08	
9.2	Bracket guard	XA	-		acc. to catalogue page 9/08	
9.3	Leaf guard	IA	-		acc. to catalogue page 9/08	
9.4	Bracket guard	IIB	-		acc. to catalogue page 9/08	
9.5	Bearing guard	IVA	-		acc. to catalogue page 9/08	
9.6	Internal pressure pad	acc. to profile	-		acc. to catalogue page 9/02	
9.7	Latch	acc. to profile	-		acc. to catalogue page 9/17	
9.8	Latch deadbolt	-	-		acc. to catalogue page 9/17	
9.9	Latch pad	acc. to profile	-		acc. to catalogue page 9/17	
9.10	Lift with blockade	-	-		032-001	

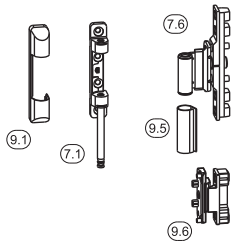

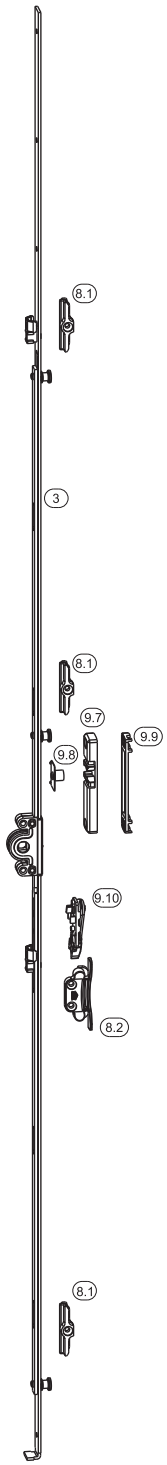

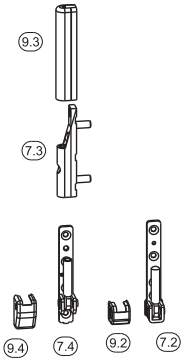

ASSEMBLING OF HARDWARE TwO

DRIVE GEAR ZNR
PVC-U WINDOWS, TURN VERSION R
ASSEMBLING OF HARDWARE ELEMENTS IN THE FRAME

Dimensions for upper hinge bracket TWO 6
catalogue No **015-005**
Jig for the frame Uhb/Lhb Ø6
catalogue No **038-012**

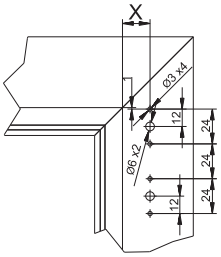

Dimensions for upper hinge bracket TWO 3
catalogue No **015-004**
Jig for the frame Uhb/Lhb O3
catalogue No **038-009**

S1

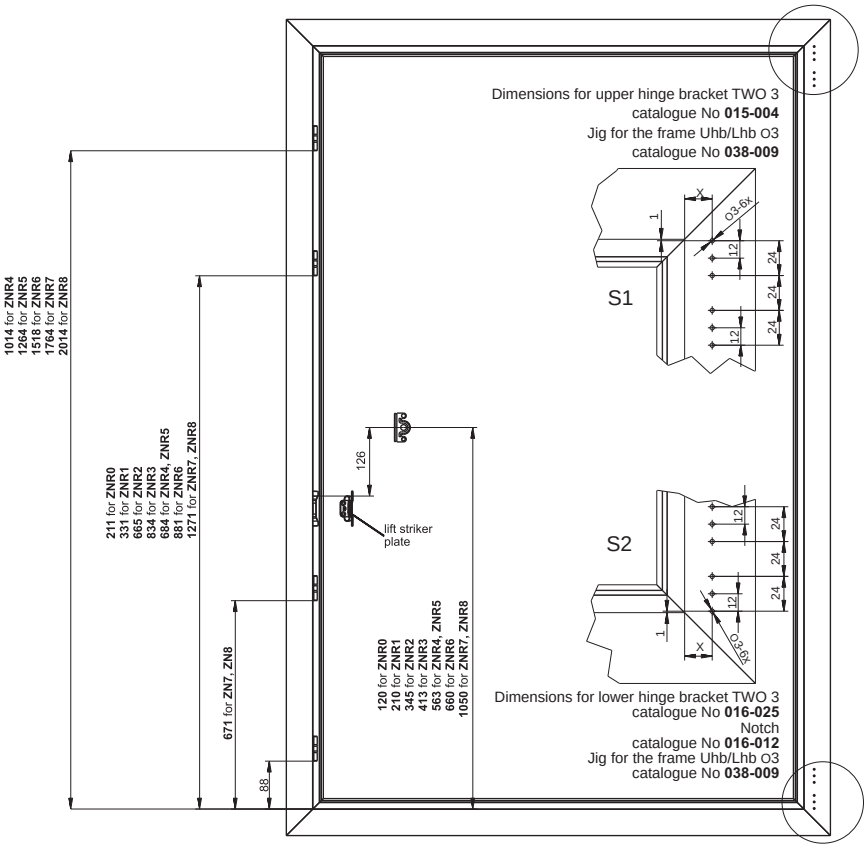

X=19 for sash rebate "20"
X=20,5 for sash rebate "21","22"

S2

Dimensions for lower hinge bracket TWO 3
catalogue No **016-025**
Notch
catalogue No **016-012**
Jig for the frame Uhb/Lhb O3
catalogue No **038-009**

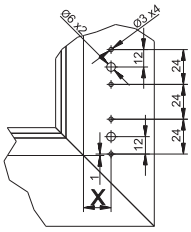

Dimensions for lower hinge bracket TWO-6
catalogue No **016-026**
Jig for the frame Uhb/Lhb Ø6
catalogue No **038-012**

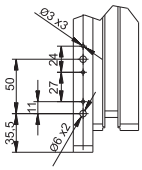

Dimensions for lower hinge leaf TwO-6
catalogue No **016-024**
with lower notch hinge bracket
catalogue No **016-012**
Jig for the sash Lhl/TwO 6
catalogue No **038-001** or **038-002** (5°) or **038-007** (7°)
(rejigged - see ROMB catalogue)

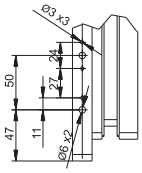

Dimensions for lower hinge leaf TwO-6
catalogue No **016-024**
with lower hinge bracket TwO-3
catalogue No **016-025**
TwO-6
catalogue No **016-026**
Jig for the sash Lhl/TwO 6
catalogue No **038-001** or **038-002** (5°) or **038-007** (7°)
(see ROMB catalogue)

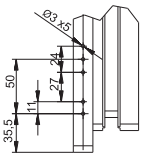

Dimensions for lower hinge leaf TwO-3
catalogue No **016-023**
with lower notch hinge bracket
catalogue No **016-012**
Jig for the sash Lhl/TwO 3
catalogue No **038-005** or **038-006 (7°)**
(rejigged - see ROMB catalogue)

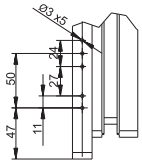

Dimensions for lower hinge leaf TwO-3
catalogue No **016-023**
with lower hinge bracket TwO-3
catalogue No **016-025**
TwO-6
catalogue No **016-026**
Jig for the sash Lhl/TwO3
catalogue No **038-005** or **038-006 (7°)**
(see ROMB catalogue)

ASSEMBLING OF HARDWARE TwO

DRIVE GEAR S, SR
PVC-U WINDOWS, TURN VERSION R
LIST OF BASIC SUBASSEMBLIES

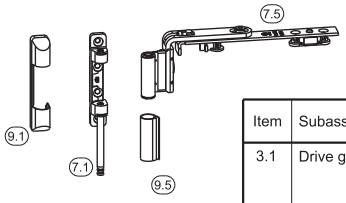

Item	Subassembly	Marking	Scope of use Hw	Scope of use Sw	Catalogue No	
					mushroom deadbolt	cylinder deadbolt
3.1	Drive gear S	S00	<340	-	004-005	004-001
		S01	341-540	-	004-006	004-002
		S02	541-730	-	004-007	004-003
		S03	731-990	-	004-008	004-004
		S1A	991-1250	-	004-013	004-009
		S2	1251-1450	-	004-014	004-010
		S3	1451-1900	-	004-015	004-011
		S4	1901-2400	-	004-016	004-012
3.2	Drive gear SR	SR1A	991-1290	-	004-021	004-017
		SR2	1291-1490	-	004-022	004-018
		SR3	1491-2030	-	004-023	004-019
		SR4	2031-2400	-	004-024	004-020
7.1	Upper hinge bracket TwO	TwO 3	-		015-004	
		TwO 6	-		015-005	
7.2	Lower notch hinge bracket		-		016-012	
7.3	lower hinge leaf TwO	TwO 3	-		016-023	
		TwO 6	-		016-024	
7.4	Lower hinge bracket TwO	TwO 3	-		016-025	
		TwO 6	-		016-026	
7.5	Corner hinge leaf TwO	TwO 9	-		017-003	
		TwO 13	-		017-004	
		TwO 13/21	-		017-005	
		TwO 14	-		017-006	
7.6	Notch hinge leaf TwO	TwO 9/B	-		019-005	
		TwO 13/B	-		019-006	
		TwO 13/21/B	-		019-007	
		TwO 14/B	-		019-008	
8.1	Peripheral striker plate	acc. to profile	-		acc. to catalogue page 8/02	
8.2	Lift striker plate	acc. to profile	-		acc. to catalogue page 8/19	
9.1	Bracket guard	IIIB	-		acc. to catalogue page 9/08	
9.2	Bracket guard	XA	-		acc. to catalogue page 9/08	
9.3	Leaf guard	IA	-		acc. to catalogue page 9/08	
9.4	Bracket guard	IIB	-		acc. to catalogue page 9/08	
9.5	Bearing guard	IVA	-		acc. to catalogue page 9/08	
9.6	Internal pressure pad	acc. to profile	-		acc. to catalogue page 9/02	
9.7	Latch	acc. to profile	-		acc. to catalogue page 9/17	
9.8	Latch deadbolt	-	-		acc. to catalogue page 9/17	
9.9	Latch pad	acc. to profile	-		acc. to catalogue page 9/17	
9.10	Lift with blockade	-	-		032-001	

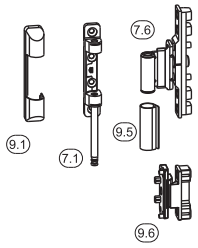

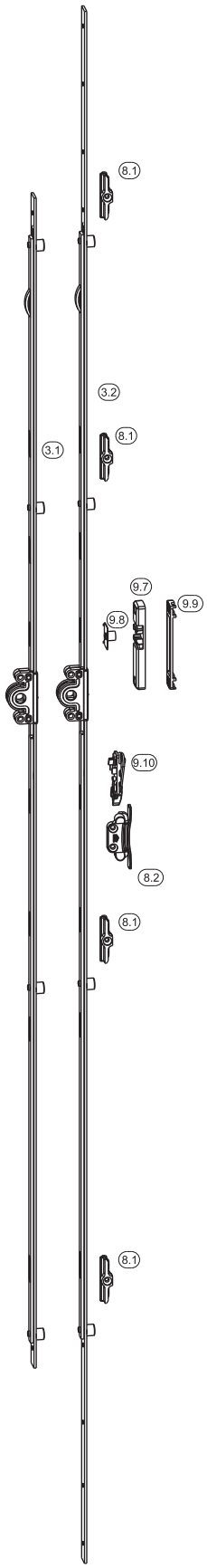

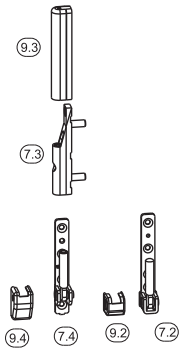

ASSEMBLING OF HARDWARE TwO

DRIVE GEAR S, SR
PVC-U WINDOWS, TURN VERSION R
ASSEMBLING OF HARDWARE ELEMENTS IN THE FRAME

Dimensions for upper hinge bracket TWO 6
catalogue No **015-005**
Jig for the frame Uhb/Lhb Ø6
catalogue No **038-012**

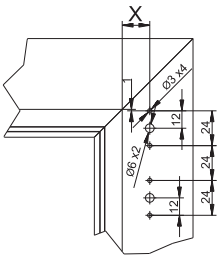

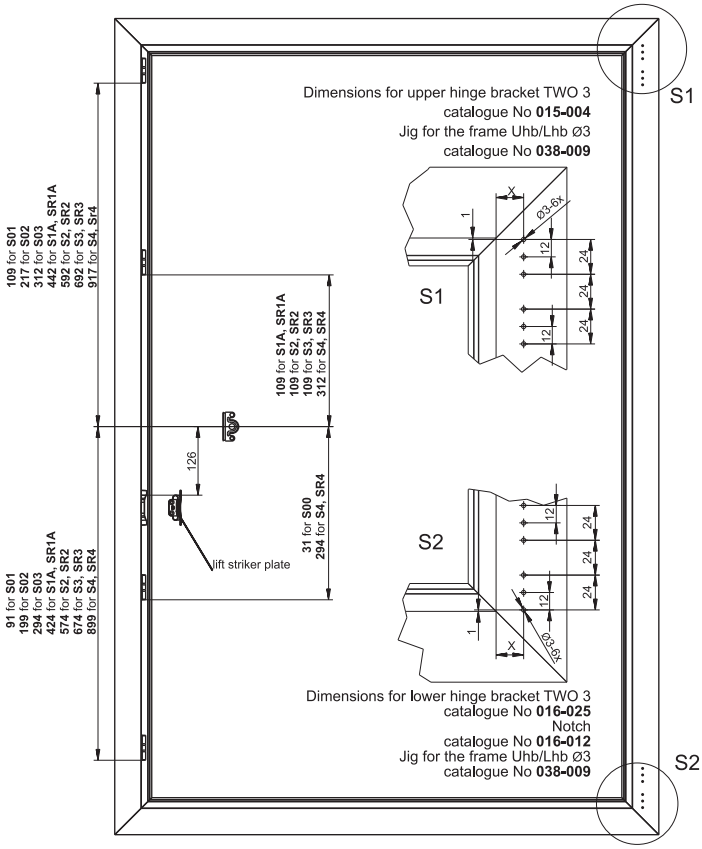

X=19 for sash rebate "20"
X=20,5 for sash rebate "21","22"

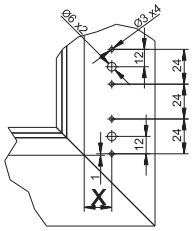

Dimensions for lower hinge bracket TWO-6
catalogue No **016-026**
Jig for the frame Uhb/Lhb Ø6
catalogue No **038-012**

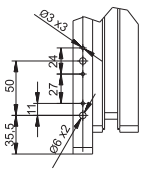

Dimensions for lower hinge leaf TwO-6
catalogue No **016-024**
with lower notch hinge bracket
catalogue No **016-012**
Jig for the sash Lhl/TwO 6
catalogue No **038-001** or **038-002** (5°) or **038-007** (7°)
(rejigged - see ROMB catalogue)

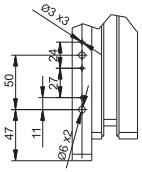

Dimensions for lower hinge leaf TwO-6
catalogue No **016-024**
with lower hinge bracket TwO-3
catalogue No **016-025**
TwO-6
catalogue No **016-026**
Jig for the sash Lhl/TwO 6
catalogue No **038-001** or **038-002** (5°) or **038-007** (7°)
(see ROMB catalogue)

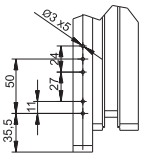

Dimensions for lower hinge leaf TwO-3
catalogue No **016-023**
with lower notch hinge bracket
catalogue No **016-012**
Jig for the sash Lhl/TwO 3
catalogue No **038-005** or **038-006 (7°)**
(rejigged - see ROMB catalogue)

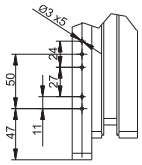

Dimensions for lower hinge leaf TwO-3
catalogue No **016-023**
with lower hinge bracket TwO-3
catalogue No **016-025**
TwO-6
catalogue No **016-026**
Jig for the sash Lhl/TwO3
catalogue No **038-005** or **038-006 (7°)**
(see ROMB catalogue)

DRIVE GEAR Z
FOR THE LIFT WITH BLOCKADE

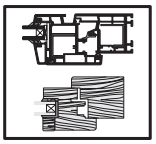

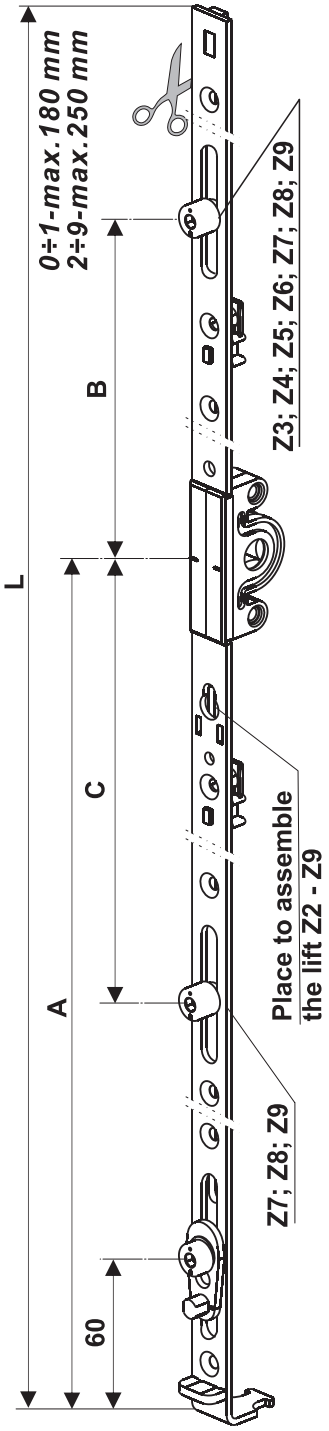

Subassembly	Catalogue No		Scope of use Hw [mm]	L [mm]	A [mm]	B [mm]	C [mm]
	Mushroom deadbolt	Cylinder deadbolt					
Z 0	**001-001**		360 - 540	380	115		
Z 1	**001-002**		420 - 600	440	172		
Z 2	**001-003**		590 - 840	680	300		
Z 3	**001-036**	**001-029**	801 - 1050	890	460	109	
Z 4	**001-037**	**001-030**	1001 - 1250	1090	560	109	
Z 5	**001-038**	**001-031**	1251 - 1500	1340	660	109	
Z 6	**001-039**	**001-032**	1501 - 1750	1590	660	109	
Z 7	**001-040**	**001-033**	1751 - 2000	1840	1050	410	290
Z 8	**001-041**	**001-034**	1951 - 2200	2040	1050	410	290
Z 9	**001-042**	**001-035**	2151 - 2400	2240	1050	410	290

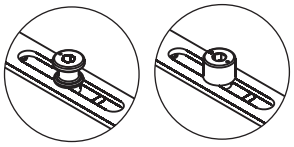

mushroom deadbolt — cylinder deadbolt

PACKING

Subassembly		length [mm]	width [mm]	height [mm]	pcs/ box	box weight [kg]
Z0	box	470	85	50	10	2,5
	pallet	1200	800		1600	
Z1	box	470	85	50	10	2,7
	pallet	1200	800		1600	
Z2	box	800	85	50	10	3,8
	pallet	1230	800		1200	
Z3	box	930	85	50	10	4,8
	pallet	1200	800		800	
Z4	box	1230	85	50	10	5,8
	pallet	1200	800		800	
Z5	box	1420	85	50	10	7,8
	pallet	1600	800		800	
Z6	box	1600	85	50	10	8,4
	pallet	1600	800		800	
Z7	box	1870	85	50	10	9,4
	pallet	2200	800		800	
Z8	box	2100	85	50	10	10,4
	pallet	2200	800		800	
Z9	box	2250	85	50	10	11
	pallet	2250	800		800	

USE:
In sashes of **R** and **RU** (Dr and Tw) windows with the handle in fixed position for specific size of the drive gear.
In windows with movable post drive gear Z works with drive gear B.

MARKING:
L - total length of drive gear
A - height of handle position.

DRIVE GEAR UC

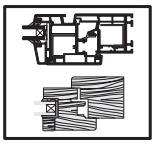

Subassembly	Catalogue No		Scope of use Sw [mm]	L [mm]	A [mm]	B [mm]	C [mm]	D [mm]	E [mm]	E1 [mm]
	cylinder deadbolt	mushroom deadbolt								
UC1	**003-001**	**003-005**	470 - 740	432	216	168	168		70	
UC2	**003-002**	**003-006**	741 - 1040	696	348	306	306		70	
UC3A	**003-003**	**003-007**	1041 - 1340	1002	501	459	459	118		40
UC4	**003-004**	**003-008**	1341 - 1700	1308	654	612	612	118	354	354

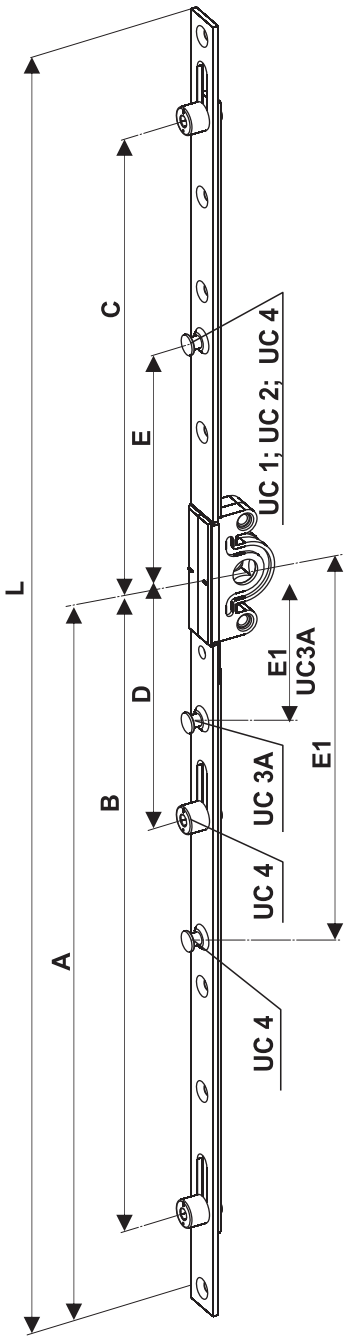

method of fitting for UC1 and UC2

method of fitting UC3A

method of fitting UC4

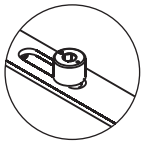

cylinder deadbolt

USE:
in sashes of windows **U** (Dr and Tw) with scissors stay.
Recommended in Dr sashes with Hw < 1000 mm,
Tw o Hw < 800 mm.

MARKING:
L - total length of drive gear

PACKING

Subassembly		lenght [mm]	width [mm]	height [mm]	pcs/ box	Box weight [kg]
UC1	box	470	85	50	10	2,70
	pallet	1200	800		1600	
UC2	box	800	85	50	10	4,00
	pallet	1200	800		1200	
UC3A	box	1100	85	50	10	5,54
	pallet	1200	800		800	
UC4	box	1420	85	50	10	7,15
	pallet	1600	800		800	

DRIVE GEAR M
FOR LIFT WITH BLOCKADE

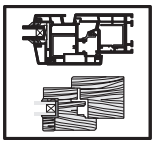

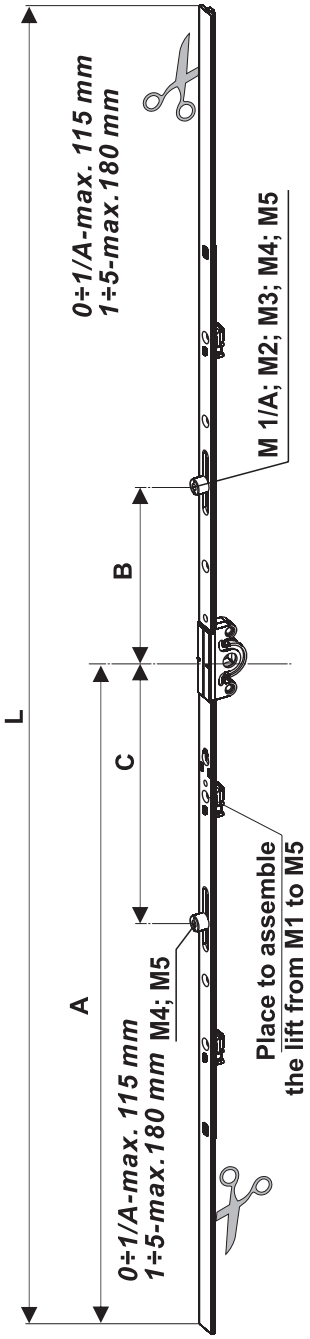

Subassembly	Catalogue No		Scope of use Hw [mm]	L [mm]	A [mm]	B [mm]	C [mm]
	mushroom deadbolt	cylinder deadbolt					
M 0	-	**002-001**	505 - 750	430	215		
M 1	-	**002-002**	660 - 1030	710	355		
M 1/A	**002-012**	**002-007**	750 - 980	660	330	109	
M 2	**002-008**	**002-003**	950 - 1320	1000	500	109	
M 3	**002-009**	**002-004**	1310 - 1680	1360	680	109	
M 4	**002-010**	**002-005**	1670 - 2040	1720	860	350	350
M 5	**002-011**	**002-006**	2030 - 2400	2080	1040	350	350

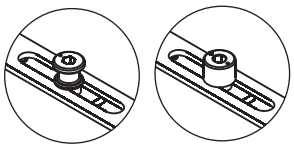

mushroom deadbolt — cylinder deadbolt

USE:
in sashes of windows **R, RU** and **U** (Dr and Tw) where it is necessary to keep the central position of the handle

MARKING:
L - total length of drive gear

NOTE:
In windows with movebale post drive gear **M**, works with footing **BM** and connector **BM**

Packing

Subassembly		length [mm]	width. [mm]	height [mm]	pcs/ box	Box weight [kg]
MO	box	660	85	50	10	3,50
	pallet	1200	800		1600	
M1	box	660	85	50	10	4,00
	pallet	1200	800		1200	
M1/A	box	660	85	50	10	4,10
	pallet	1200	800		1200	
M2	box	1100	85	50	10	5,26
	pallet	1200	800		800	
M3	box	1420	85	50	10	7,06
	pallet	1630	800		800	
M4	box	1730	85	50	10	8,89
	pallet	2200	800		800	
M5		2100	85	50	10	10,50
		2200	800		800	

DRIVE GEAR MC

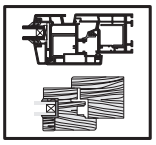

Subassembly	Catalogue No		Scope of use Sw [mm]	L [mm]	A [mm]	B [mm]	E [mm]	E1 [mm]
	cylinder deadbolt	mushroom deadbolt						
MC 1	**002-013**		610 - 980	660	330		57	
MC 2	**002-014**	**002-040**	950 - 1320	1000	500	109	57	
MC 3	**002-015**	**002-041**	1310 - 1680	1360	680	109	231	231

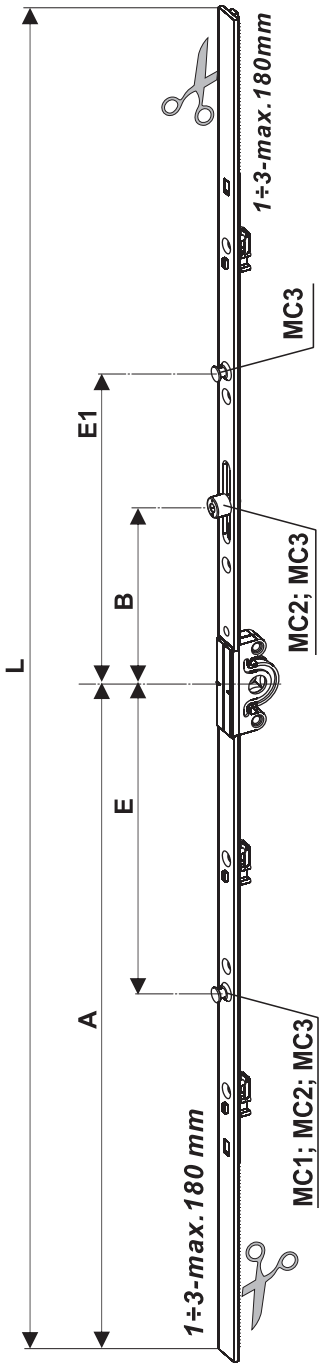

method of fitting for MC1

method of fitting for MC2

method of fitting for MC3

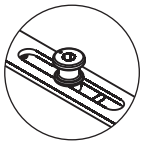

mushroom deadbolt

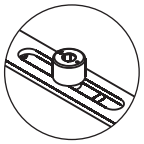

cylinder deadbolt

USE:
in sashes of windows **U** (Dr and Tw), works with scissors stay and ends.

MARKING:
L - total length of drive gear

PACKING

Subassembly		length [mm]	width [mm]	height [mm]	pcs/ box	Box weight [kg]
MC 1	box	660	85	50	10	3,80
	pallet	1200	800		1200	
MC 2	box	1100	85	50	10	5,30
	pallet	1200	800		800	
MC 3	box	1420	85	50	10	7,10
	pallet	1630	800		80	

SYMMETRICAL DRIVE GEAR 7,5 M
FOR LIFT WITH BLOCKADE

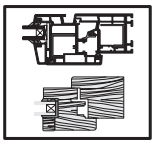

Subassembly	Catalogue No		Scope of useHw [mm]	L [mm]	A [mm]	B [mm]	C [mm]
	cylinder deadbolt	mushroom deadbolt					
7,5 M 0	**002-018**	-	670 - 750	430	215		
7,5 M 1	**002-019**	-	750 - 980	660	330		
7,5 M 2	**002-020**	**002-036**	950 - 1320	1000	500	160	
7,5 M 3	**002-021**	**002-037**	1310 - 1680	1360	680	160	
7,5 M 4	**002-022**	**002-038**	1670 - 2040	1720	860	360	360
7,5 M 5	**002-023**	**002-039**	2030 - 2400	2080	1040	360	360

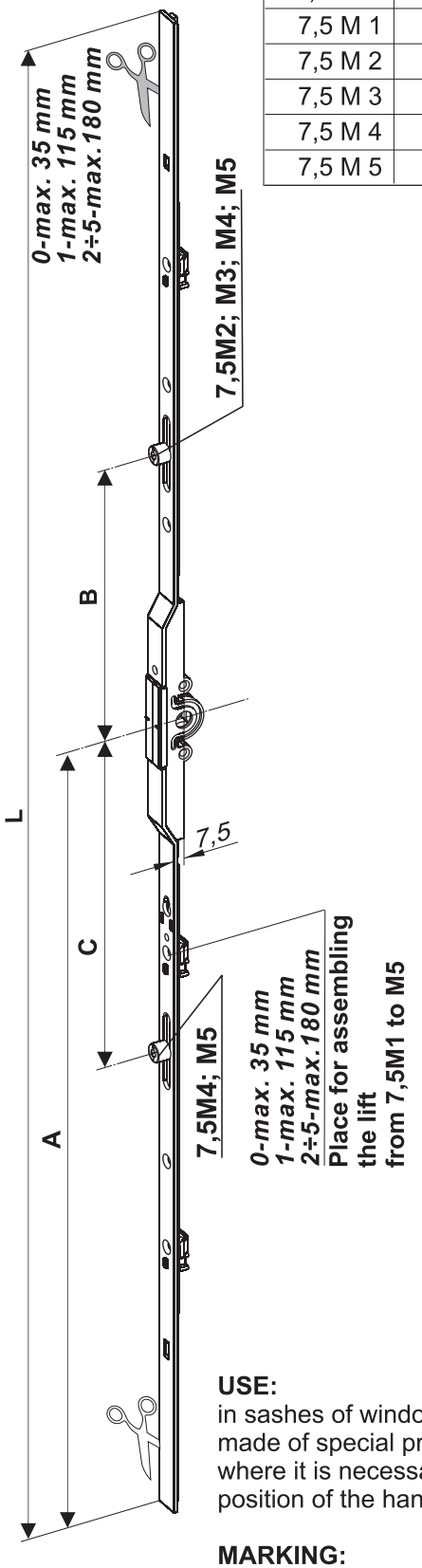

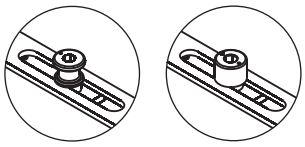

mushroom deadbolt cylinder deadbolt

USE:
in sashes of windows **R, RU** and **U** (Dr and Tw) made of special profiles (so-called "economical") where it is necessary to keep the central position of the handle.

MARKING:
L - total length of drive gear

PACKING

Subassembly		length [mm]	width [mm]	height [mm]	pcs/ box	box weight [kg]
7,5 M 0	box	660	85	50	10	3,50
	pallet	1200	800		1200	
7,5 M 1	box	660	85	50	10	3,80
	pallet	1200	800		1200	
7,5 M 2	box	1100	85	50	10	5,30
	pallet	1200	800		800	
7,5 M 3	box	1420	85	50	10	6,90
	pallet	1630	800		800	
7,5 M 4	box	1730	85	50	10	8,76
	pallet	2200	800		800	
7,5 M 5	box	2100	85	50	10	10,83
	pallet	2200	800		800	

DRIVE GEAR B

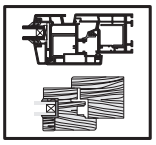

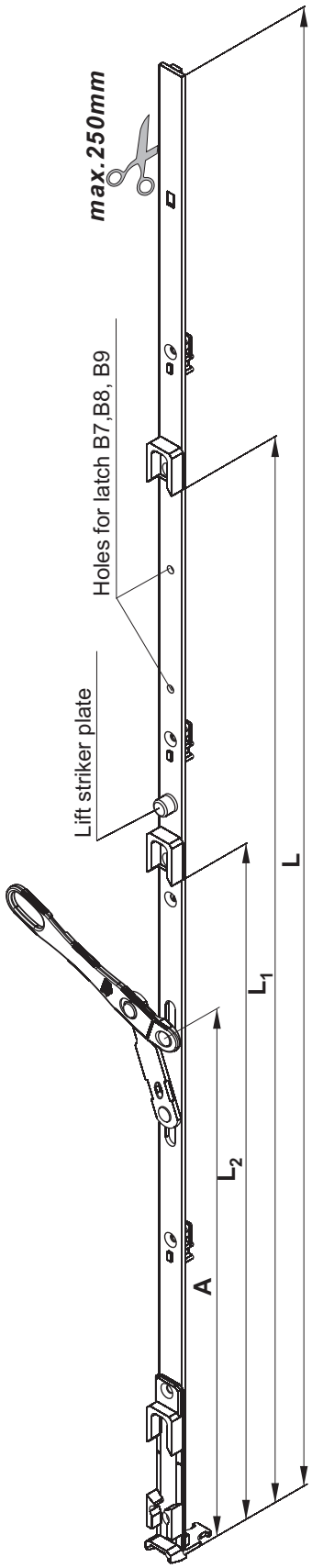

Subassembly	Catalogue No	Scope of use Hw [mm]	L [mm]	A [mm]	L_1 [mm]	L_2 [mm]	peripheral striker plate (pcs)
B 2	**012-001**	590 - 840	680	177			1
B 3	**012-002**	801 - 1050	890	177	578		1
B 4	**012-003**	1001 - 1250	1090	177	678		1
B 5	**012-004**	1251 - 1500	1340	427	778		1
B 6	**012-005**	1501 - 1750	1590	427	778		1
B 7	**012-006**	1751 - 2000	1840	637	1469	769	2
B 8	**012-007**	1951 - 2200	2040	637	1469	769	2
B 9	**012-008**	2151 - 2400	2240	637	1469	769	2

USE:
in sashes of windows with a so-called movable post (Dr and Tw) with notch clearance 12 mm. Offered in set with drive gear Z. Works with adjustable striker plate B and end 3 or end 4 transmitting drive to corner drive gear NR in the upper and lower part of the sash.
Recommended in sashes Dr with Sw>1000mm, Tw Sw>800mm.

MARKING:
L - total length of drive gear
A - height of lever location
Peripheral striker plate catalogue No **012-023** in set with drive gear.

PACKING

Subassembly		length [mm]	width [mm]	height [mm]	pcs/ box	Box weight [kg]
B2	box	800	85	50	10	3,6
	pallet	1230	800		1200	
B3	box	930	85	50	10	4,6
	pallet	1200	800		800	
B4	box	1230	85	50	10	5,6
	pallet	1200	800		800	
B5	box	1420	85	50	10	6,7
	pallet	1600	800		800	
B6	box	1600	85	50	10	7,8
	pallet	1600	800		800	
B7	box	1870	85	50	10	8,5
	pallet	2200	800		800	
B8	box	2100	85	50	10	9,7
	pallet	2200	800		800	
B9	box	2250	85	50	10	10,9
	pallet	2250	800		800	

DRIVE GEAR S

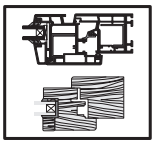

Subassembly	Catalogue No		Scope of use Hw [mm]	L [mm]	A [mm]	B [mm]	C [mm]	A1 [mm]
	mushroom deadbolt	cylinder deadbolt						
S 00	**004-005**	**004-001**	<340	145				
S 01	**004-006**	**004-002**	340 - 540	300	150	100		
S 02	**004-007**	**004-003**	541 - 730	500	250	208		
S 03	**004-008**	**004-004**	731 - 990	690	345	303		
S1A	**004-013**	**004-009**	991 - 1250	950	465	433	100	485
S 2	**004-014**	**004-010**	1251 - 1450	1250	615	583	100	635
S 3	**004-015**	**004-011**	1451 - 1900	1450	715	683	100	735
S 4	**004-016**	**004-012**	1901 - 2400	1900	940	908	303	960

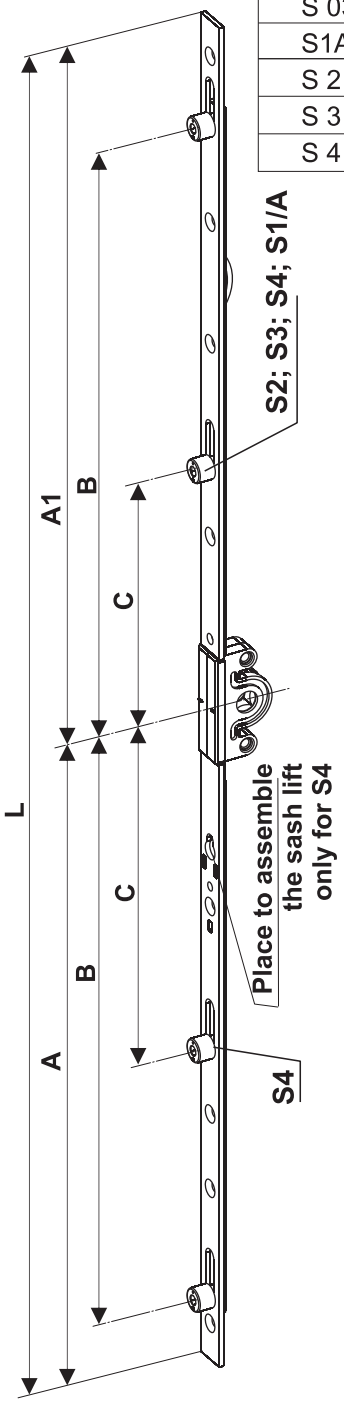

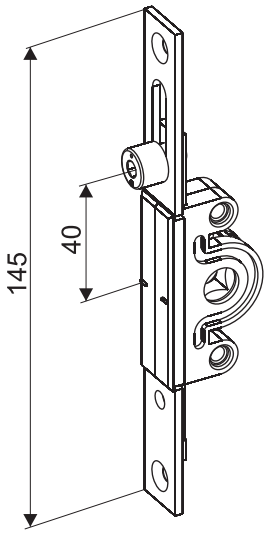

Drive gear **S 00**

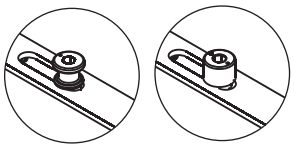

mushroom deadbolt cylinder deadbolt

USE:
in sashes of windows **R,** (Dr and Tw) where it is necessary to keep the handle in the central position.
Scope of use: Dr for Sw < 1000 mm, Tw for Sw < 800 mm.
MARKING:
L - total length of drive gear

PACKING

Subassembly		length [mm]	width [mm]	height [mm]	pcs/ box	box weight [kg]
S 00	box	470	85	50	10	2,5
	pallet	1200	800		1600	
S 01	box	470	85	50	10	2,7
	pallet	1200	800		1600	
S O2	box	800	85	50	10	3,8
	pallet	1230	800		1200	
S 03	box	930	85	50	10	4,8
	pallet	1200	800		800	
S 1A	box	470	85	50	10	5,8
	pallet	1200	800		1600	
S 2	box	800	85	50	10	6,2
	pallet	1230	800		1600	
S 3	box	930	85	50	10	7,2
	pallet	1200	800		1200	
S 4	box	1230	85	50	10	9,3
	pallet	1200	800		800	

DRIVE GEAR SR

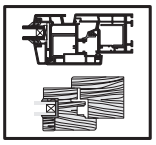

Subassembly	Catalogue No		Scope of use Hw [mm]	L [mm]	A [mm]	B [mm]	C [mm]	X* [mm]
	mushroom deadbolt	mylinder deadbolt						
SR1A	**004-021**	**004-017**	991 - 1250	1250	625	433	100	150
SR2	**004-022**	**004-018**	1251 - 1450	1450	725	583	100	100
SR3	**004-023**	**004-019**	1451 - 1900	1900	950	683	100	225
SR4	**004-024**	**004-020**	1901 - 2400	2400	1200	908	303	250

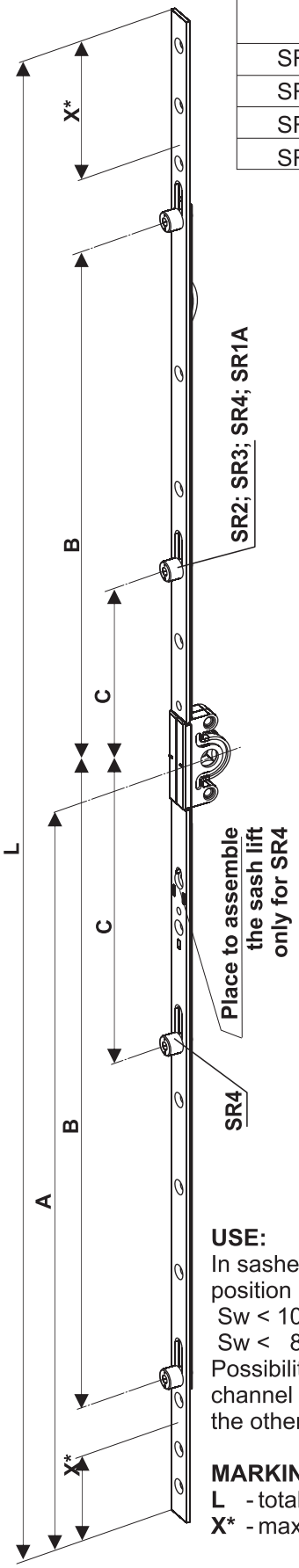

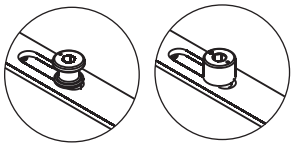

mushroom deadbolt cylinder deadbolt

USE:
In sashes of windows **R** with middle (central) position of handle.
Sw < 1000 mm (windows Dr)
Sw < 800 mm (windows Tw)
Possibility of total covering of the hardware channel and adjusting the handle axis toward the other sash (this refers to typical windows).

MARKING:
L - total length of drive gear
X* - maximum length of the cut

PACKING

Subassembly		lenght [mm]	width [mm]	height [mm]	pcs/ box	box weight [kg]
SR1A	box	660	85	50	10	5,9
	pallet	1200	800		1200	
SR2	box	1100	85	50	10	6,5
	pallet	1200	800		800	
SR3	box	1420	85	50	10	8,7
	pallet	1630	800		800	
SR4	box	1730	85	50	10	10,7
	pallet	2200	800		800	

SYMMETRICAL DRIVE GEAR 7,5 SR

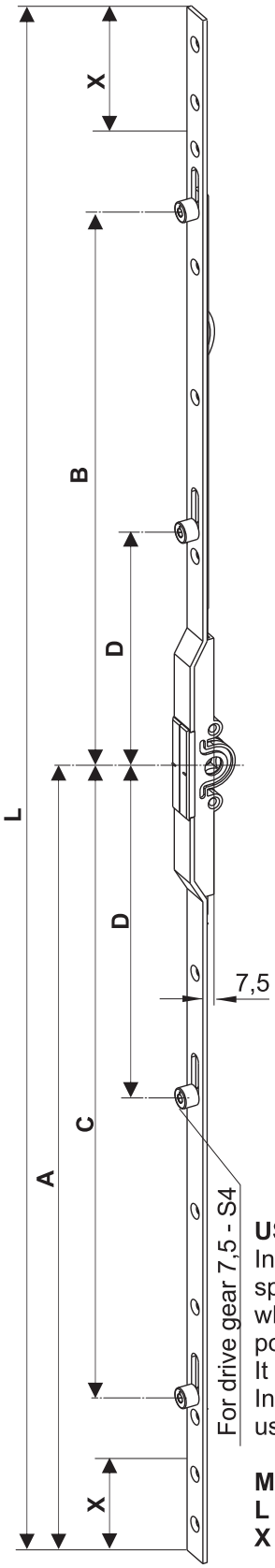

Subassembly	Catalogue No cylinder deadbolt	Scope of use Hw [mm]	L [mm]	A [mm]	B [mm]	C [mm]	D [mm]	X [mm]
7,5 SR-01	**004-032**	340 - 540	540	270	100	135		95
7,5 SR-02	**004-033**	541 - 730	730	365	208	208		95
7,5 SR-03	**004-034**	731 - 990	990	495	303	303		130
7,5 SR-1/A	**004-035**	991 - 1290	1290	645	433	433	100	150
7,5 SR-2	**004-036**	1291 - 1490	1490	745	583	583	100	100
7,5 SR-3	**004-037**	1491 - 2030	2030	1015	683	683	100	270
7,5 SR-4	**004-038**	2031 - 2400	2400	1200	908	908	303	185

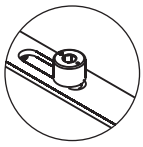

cylinder deadbolt

USE:
In sashes of windows **R and U** (Tw) in special profiles (so-called ”economical”) where it is necessary to keep the central position of the handle.
It does not work with scissors stay.
In sashes **U** the scissors stay should be used from the side of the sash.

MARKING:
L - total length of drive gear
X - maximum length of the cutting

PACKING

Subassembly		length [mm]	width [mm]	height [mm]	pcs/ box	box weight [kg]
7,5 SR 01	box	660	85	50	10	5,4
	pallet	1200	800		1600	
7,5 SR 02	box	1100	85	50	10	6,9
	pallet	1200	800		1200	
7,5 SR 03	box	1100	85	50	10	7,9
	pallet	1200	800		800	
7,5 SR 1/A	box	1420	85	50	10	6,1
	pallet	1630	800		800	
7,5 SR 2	box	1730	85	50	10	6,7
	pallet	2200	800		800	
7,5 SR 3	box	2100	85	50	10	8,9
	pallet	2200	800		800	
7,5 SR 4	box	2400	85	50	10	10,9
	pallet	2400	800		800	

DRIVE GEAR 7,5 S

Subassembly	Catalogue No cylinder deadbolt	Scope of use Hw [mm]	L [mm]	A [mm]	B [mm]	C [mm]	D [mm]
7,5 S-01	**004-025**	340 - 540	320	160	100	135	
7,5 S-02	**004-026**	541 - 730	500	250	208	208	
7,5 S-03	**004-027**	731 - 990	690	345	303	303	
7,5 S-1/A	**004-028**	991 - 1290	950	465	433	433	100
7,5 S-2	**004-029**	1291 - 1490	1250	615	583	583	100
7,5 S-3	**004-030**	1491 - 2030	1450	715	683	683	100
7,5 S-4	**004-031**	2031 - 2400	1900	940	908	908	303

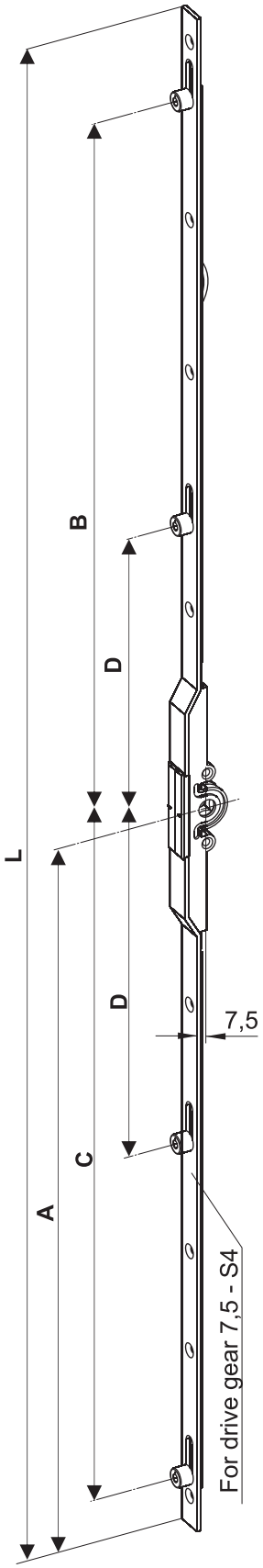

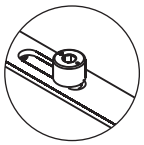

cylinder deadbolt

USE:
in sashes of windows **R** and **U** (Tw) in special profiles (so-called ”economical”) where it is necessary to keep the central position of the handle.
It does not work with scissors stay.
In windows **U** the scissors stay should be used from the side of the sash.

MARKING:
L - total length of drive gear

PACKING

Subassembly		length [mm]	width [mm]	height [mm]	pcs/ box	box weight [kg]
7,5 S 01	box	660	85	50	10	5,4
	pallet	1200	800		1600	
7,5 S 02	box	1100	85	50	10	6,9
	pallet	1200	800		1200	
7,5 S 03	box	1100	85	50	10	7,9
	pallet	1200	800		800	
7,5 S 1/A	box	1420	85	50	10	6,1
	pallet	1630	800		800	
7,5 S 2	box	1730	85	50	10	6,7
	pallet	2200	800		800	
7,5 S 3	box	2100	85	50	10	8,9
	pallet	2200	800		800	
7,5 S 4	box	2400	85	50	10	10,9
	pallet	2400	800		800	

Balcony drive gear MB

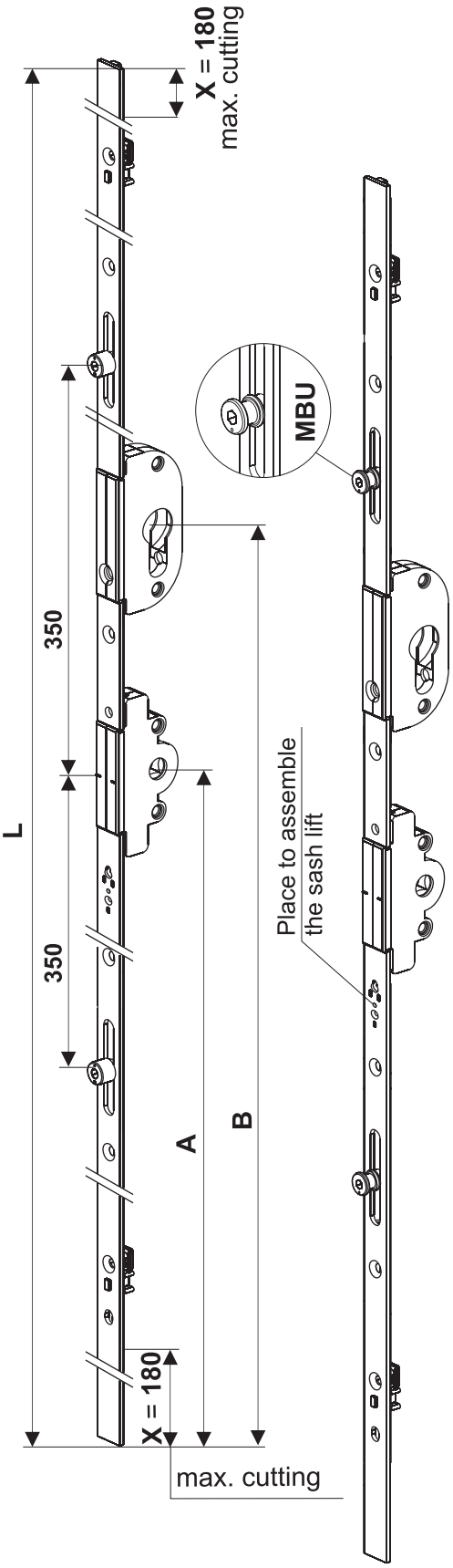

Subassembly	Catalogue No	Scope of use Hw [mm]	L [mm]	A [mm]	B [mm]
MB4U	**002-016**	1670 - 2040	1720	860	1030
MB5U	**002-017**	2030 - 2400	2080	1040	1210

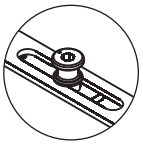

mushroom deadbolt

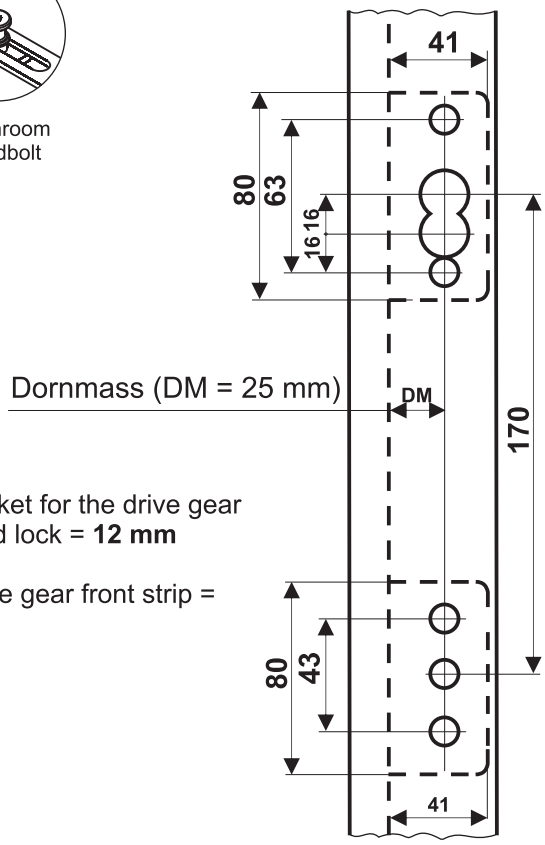

Diagram for making holes

NOTE:
Width of the socket for the drive gear transmission and lock = **12 mm**

Width of the drive gear front strip = **16 mm**

USE:
In sashes of turn / tilt and turn balcony doors (**Dr** and **Tw**) as a basic subassembly transmitting drive to the other parts of the hardware.

PACKING

Subassembly		length [mm]	width [mm]	height [mm]	pcs/ box	box weight [kg]
MB4	box	1730	85	50	10	9,80
	pallet	2200	800			
MB4U	box	1730	85	50	10	9,80
	pallet	2200	800			
MB5	box	2250	85	50	10	11,85
	pallet	2250	800			
MB5U	box	2250	85	50	10	11,85
	pallet	2250	800			

DRIVE GEAR 25M

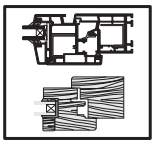

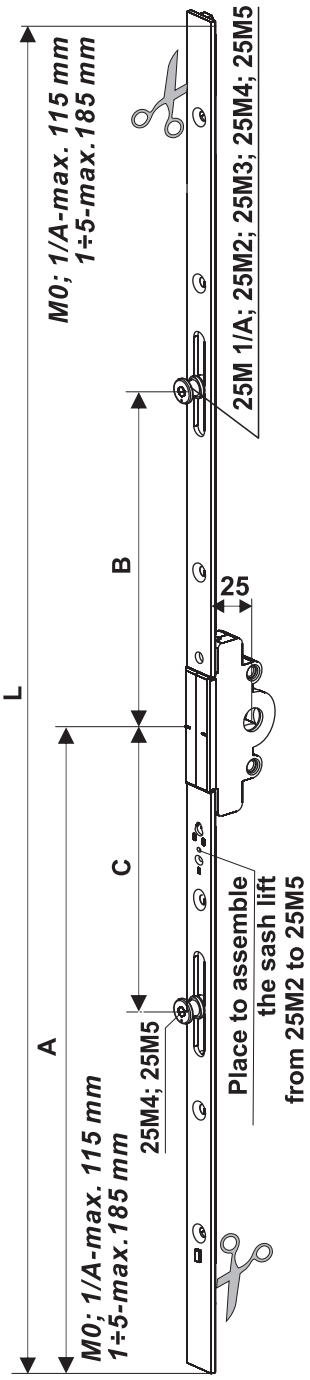

Subassembly	Catalogue No		Scope of use Hw [mm]	L [mm]	A [mm]	B [mm]	C [mm]
	cylinder deadbolt	mushroom deadbolt					
25 M-0	**002-024**		505 - 750	430	215		
25 M-1	**002-025**		610 - 980	660	330		
25 M-1/A	**002-035**	**002-030**	750 - 980	660	330	109	
25 M-2	**002-031**	**002-026**	950 - 1320	1000	500	109	
25 M-3	**002-032**	**002-027**	1310 - 1680	1360	680	109	
25 M-4	**002-033**	**002-028**	1670 - 2040	1720	860	350	350
25 M-5	**002-034**	**002-029**	2030 - 2400	2080	1040	350	350

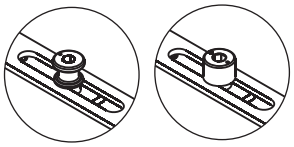

USE:
In sashes of windows **R, RU** and **U** (Dr and Tw) where it is necessary to keep the central position of the handle.

MARKING:
L - total length of drive gear

NOTE:
In windows with movable post the drive gear 25M works with footing BM and connector BM

PACKING

Subassembly		length [mm]	width [mm]	height [mm]	pcs/ box	box weight [kg]
25 MO	box	660	85	50	10	3,00
	pallet	1200	800		1600	
25 M1	box	660	85	50	10	4,00
	pallet	1200	800		1200	
25 M1/A	box	660	85	50	10	4,10
	pallet	1200	800		1200	
25 M2	box	1100	85	50	10	5,50
	pallet	1200	800		800	
25 M3	box	1420	85	50	10	7,50
	pallet	1630	800		800	
25 M4	box	1730	85	50	10	9,10
	pallet	2200	800		800	
25 M5		2100	85	50	10	10,70
		2200	800		800	

DRIVE GEAR BM

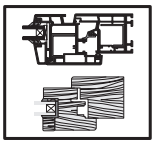

Subassembly	*Catalogue No*	*Scope of use Hw [mm]*	*L [mm]*	*A [mm]*	*L_1 [mm]*	*L_2 [mm]*
BM1/A	012-009	750 - 980	660	285	448	
BM 2	012-010	961 - 1320	1000	335	618	-
BM 3	012-011	1321 - 1680	1360	335	798	-
BM 4	012-012	1681 - 2040	1720	425	1219	519
BM 5	012-013	2041 - 2400	2080	425	1399	699

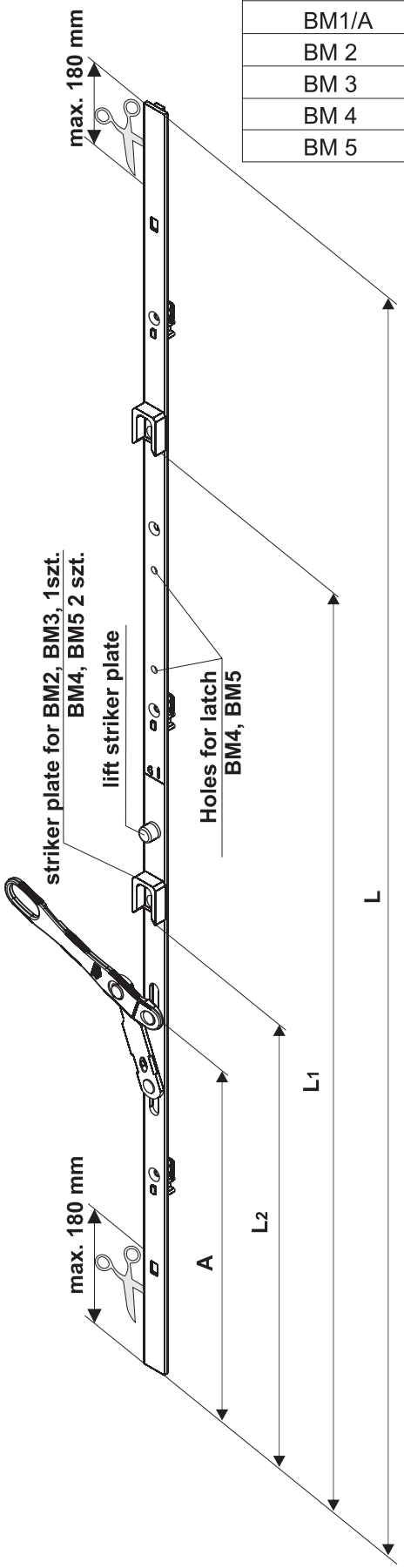

USE:
In sashes of windows with a so-called movable post **Dr** and **Tw** with notch clearance **12 mm**. In set with symmetrical drive gear **M**.
Works with corner **B** in the upper part of the sash and corner **A** in the lower part of the sash.
Recommended in sashes **Dr** with **Sw > 1000 mm**
Tw witch **Sw > 800 mm**

Striker plate catalogue No **012-023** in set with drive gear **BM**.

PACKING

Subassembly		length [mm]	width [mm]	height [mm]	pcs/ box	Box weight [kg]
BM1/A	box	1100	85	50	10	5,50
	pallet	1200	800		800	
BM2	box	1100	85	50	10	5,50
	pallet	1200	800		800	
BM3	box	1420	85	50	10	7,20
	pallet	1630	800		800	
BM4	box	1730	85	50	10	9,30
	pallet	2200	800		800	
BM5	box	2100	85	50	10	11,40
	pallet	2200	800		800	

DRIVE GEAR ZN

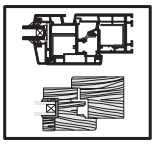

Subassembly	Catalogue No		Scope of use Hw [mm]	A [mm]	B [mm]	C [mm]	L [mm]
	mushroom deadbolt	cylinder deadbolt					
ZN-0*	**001-050**	-	360 - 540	120	-	-	380
ZN-1	**001-051**	-	541 - 720	210	-	-	560
ZN-2	**001-052**	**001-043**	721 - 900	345	109	-	580
ZN-3	**001-053**	**001-044**	901 - 1080	413	109	-	760
ZN-4	**001-054**	**001-045**	1081 - 1330	563	109	-	1010
ZN-5	**001-055**	**001-046**	1331 - 1580	563	207	-	1260
ZN-6	**001-056**	**001-047**	1581 - 1830	660	350	290	1510
ZN-7	**001-057**	**001-048**	1831 - 2080	1050	350	290	1760
ZN-8	**001-058**	**001-049**	2081 - 2330	1050	350	290	2010

* For **ZN-0** with corner **S** scope of use **280-430** mm.

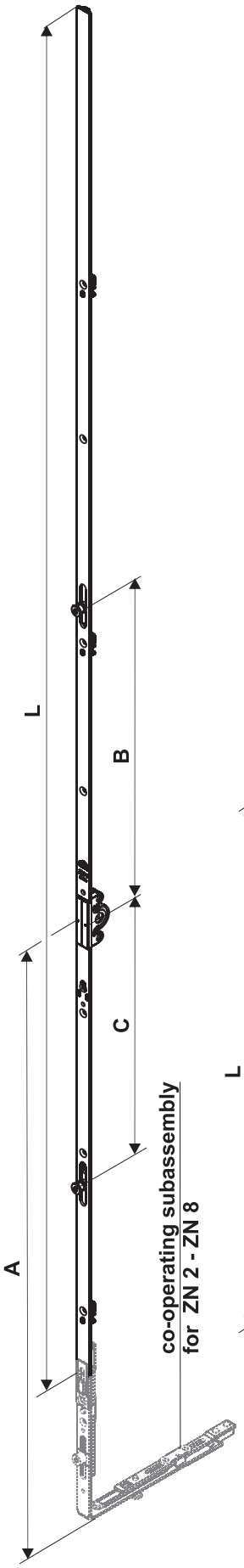

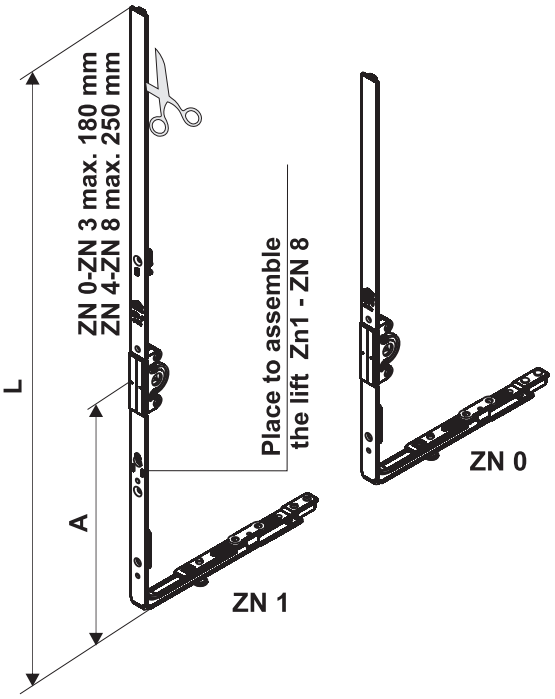

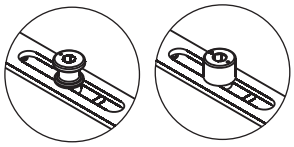

USE:
In sashes of windows **R** and **RU** (**Dr** and **Tw**) with the handle in permanent position for a drive gear in specified size. Possibility of connecting the corner, corner extension or other subassembly. In double windows works with drive gear (**ZNR**), in windows with movable post with drive gear (**BZ**).

PACKING

Subassembly		length [mm]	width [mm]	height [mm]	pcs/ box	box weight [kg]
ZN 0	box	600	400	80	50	17,00
	pallet	1200	800		1600	
ZN 1	box	780	400	80	50	20,50
	pallet	1200	800		1600	
ZN 2	box	800	85	50	10	3,00
	pallet	1200	800		1200	
ZN 3	box	920	85	50	10	4,00
	pallet	1200	800		800	
ZN 4	box	1230	85	50	10	5,00
	pallet	1200	800		800	
ZN 5	box	1420	85	50	10	6,50
	pallet	1600	800		800	
ZN 6	box	1620	85	50	10	7,50
	pallet	1600	800		800	
ZN 7	box	1870	85	50	10	9,00
	pallet	2200	800		800	
ZN 8	box	2100	85	50	10	10,00
	pallet	2200	800		800	

DRIVE GEAR ZNR

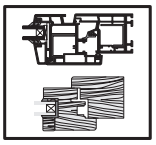

Subassembly	Catalogue No mushroom deadbolt	Scope of use Hw [mm]	A [mm]	B [mm]	B_1 [mm]	C [mm]	L [mm]
ZNR-0	**001-068**	265 - 540	120	70	-	-	540
ZNR-1	**001-069**	541 - 720	210	100	-	-	720
ZNR-2	**001-070**	721 - 900	345	299	-	-	900
ZNR-3	**001-071**	901 - 1080	413	400	-	-	1080
ZNR-4	**001-072**	1081 - 1330	563	100	430	-	1330
ZNR-5	**001-073**	1331 - 1580	563	100	680	-	1580
ZNR-6	**001-074**	1581 - 1830	660	200	837	-	1830
ZNR-7	**001-075**	1831 - 2080	1050	200	693	400	2080
ZNR-8	**001-076**	2081 - 2330	1050	200	943	400	2330

Subassembly	Catalogue No cylinder deadbolt	Scope of use Hw [mm]	A [mm]	B [mm]	B_1 [mm]	C [mm]	L [mm]
ZNR-0	**001-059**	265 - 540	120	70	-	-	540
ZNR-1	**001-060**	541 - 720	210	100	-	-	720
ZNR-2	**001-061**	721 - 900	345	299	-	-	900
ZNR-3	**001-062**	901 - 1080	413	400	-	-	1080
ZNR-4	**001-063**	1081 - 1330	563	100	430	-	1330
ZNR-5	**001-064**	1331 - 1580	563	100	680	-	1580
ZNR-6	**001-065**	1581 - 1830	660	200	837	-	1830
ZNR-7	**001-066**	1831 - 2080	1050	200	693	400	2080
ZNR-8	**001-067**	2081 - 2330	1050	200	943	400	2330

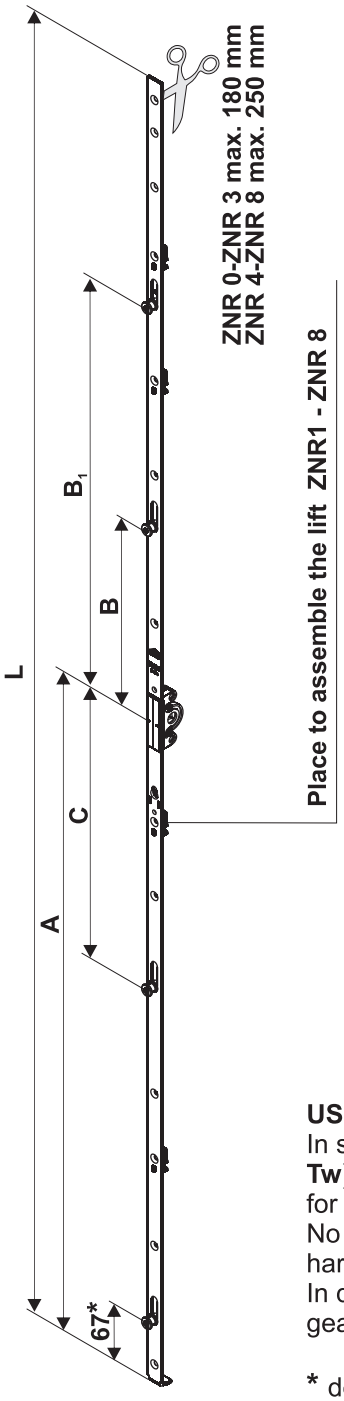

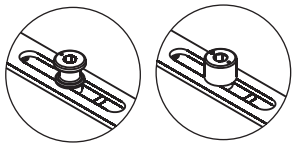

USE:
In sashes of turn windows **R** (**Dr** and **Tw**) with handle in permanent position for drive gear in specified size.
No possibility of connecting other hardware subassemblies.
In double windows works with drive gear (**ZN**).

* does not concern **ZNR 0, ZNR 1**

PACKING

Subassembly		length [mm]	width [mm]	height [mm]	pcs/ box	box weight [kg]
ZNR 0	box		85	50		1.95
	pallet		800			
ZNR 1	box		85	50		2.05
	pallet		800			
ZNR 2	box		85	50		3.20
	pallet		800			
ZNR 3	box		85	50		4.10
	pallet		800			
ZNR 4	box		85	50		5.30
	pallet		800			
ZNR 5	box		85	50		6.35
	pallet		800			
ZNR 6	box		85	50		7.75
	pallet		800			
ZNR 7	box		85	50		9.00
	pallet		800			
ZNR 8	box		85	50		10.00
	pallet		800			

DRIVE GEAR BZ

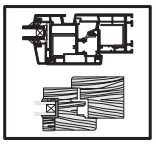

Drive gear	Catalogue No	Scope of use Hw [mm]	A [mm]	B [mm]	B_1 [mm]	C [mm]	L [mm]
BZ-2	**012-014**	721 - 900	323	463	-	-	580
BZ-3	**012-015**	901 - 1080	323	531	-	-	760
BZ-4	**012-016**	1081 - 1330	323	681	-	-	1010
BZ-5	**012-017**	1331 - 1580	323	779	-	-	1260
BZ-6	**012-018**	1581 - 1830	323	379	1019	-	1510
BZ-7	**012-019**	1831 - 2080	693	769	1409	-	1760
BZ-8	**012-020**	2081 - 2330	693	769	1409	-	2010

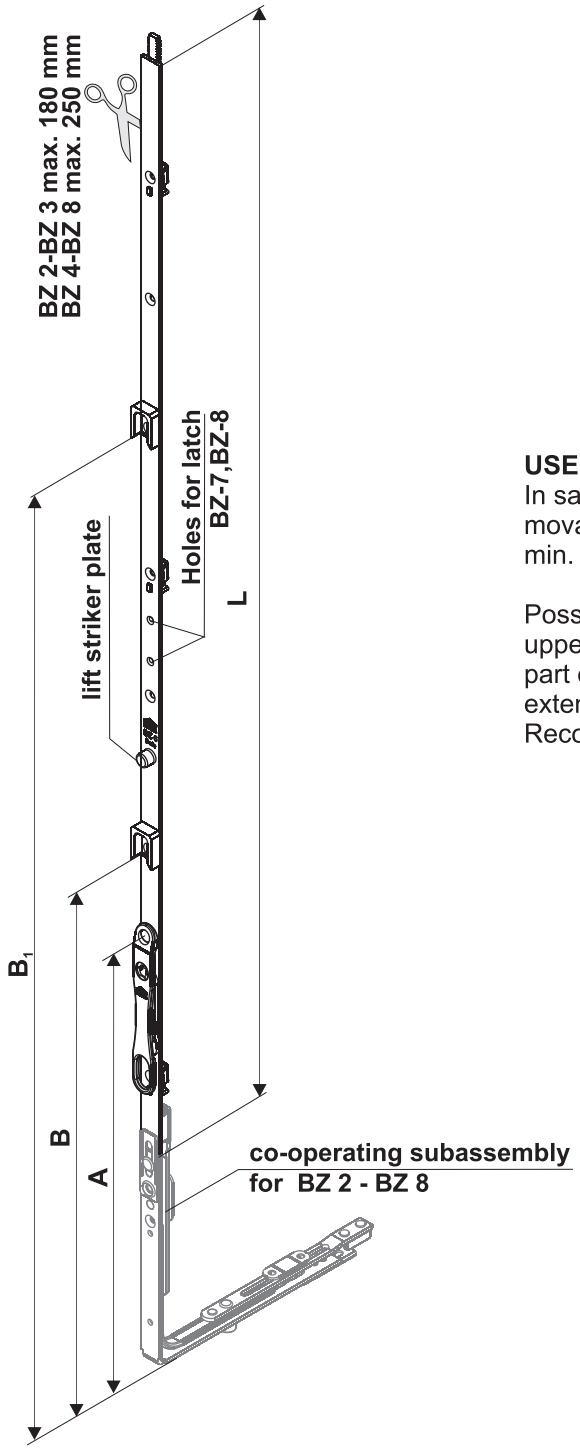

USE:
In sashes of windows with a so-called movable post (**Dr** and **Tw**) with notch clearance min. 12 mm, works with drive gear **ZN**

Possibility of connecting the corner **B** in the upper part of the sash, corner **A** in the lower part of the sash, and in the further part corner extension or other subassembly.
Recommended in sashes:

Dr with **Sw > 1000**
Tw with **Sw > 800**

PACKING

Subassembly		length [mm]	width [mm]	height [mm]	pcs/ box	box weight [kg]
BZ 2	box		85	50		3.20
	pallet		800			
BZ 3	box		85	50		4.05
	pallet		800			
BZ 4	box		85	50		5.30
	pallet		800			
BZ 5	box		85	50		6.35
	pallet		800			
BZ 6	box		85	50		7.50
	pallet		800			
BZ 7	box		85	50		8.75
	pallet		800			
BZ 8	box		85	50		10.00
	pallet		800			

Corner R

cylinder deadbolt

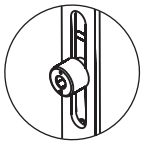

Catalogue No **005-011**

mushroom deadbolt

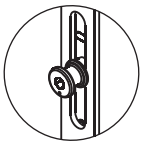

Catalogue No **005-001**

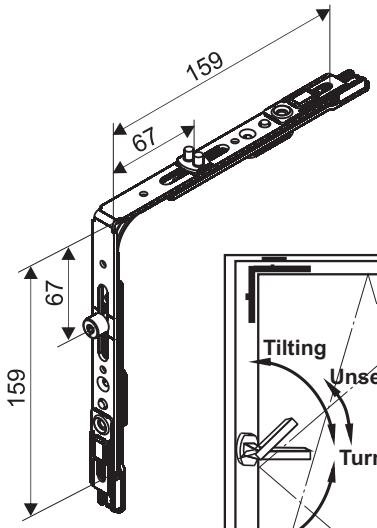

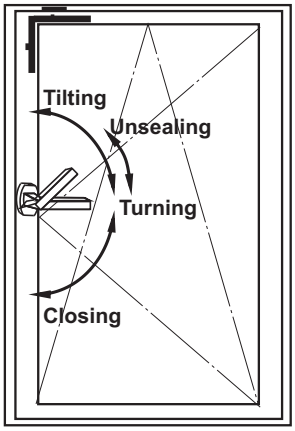

USE:
In sashes of windows **RU** (Dr and Tw). Basic subassembly transmitting drive from drive gear to other subassemblies. Corner R enables unsealing windows (microventilation) by setting the slit at $6^{\pm 1}$mm with the handle in the middle position at 45° angle between tilted and turned position. Used with striker plate R or R13, R9.
Scope of use: Sw > 400 mm.

PACKING

Subassembly		length [mm]	width [mm]	height [mm]	pcs/ box	box weight [kg]
R	box	400	290	80	50	11,10
	pallet	1200	800		4000	

Corner D

cylinder deadbolt

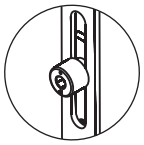

Catalogue No **005-013**

mushroom deadbolt

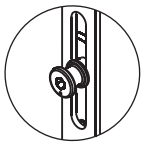

Catalogue No **005-003**

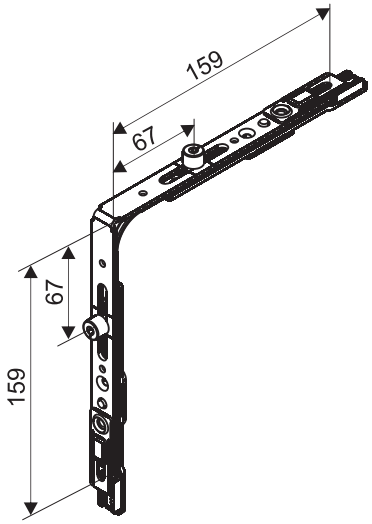

USE:
In sashes of windows **RU** (Dr and Tw) with a so-called movable post, as a sealing elements (works with end “4”). In sashes of windows **U** operated from the side. May be used in windows **RU** where sealing is necessary.
Scope of use: Sw > 400 mm.

PACKING

Subassembly		length [mm]	width [mm]	height [mm]	pcs/ box	box weight [kg]
D	box	400	290	80	50	11,15
	pallet	1200	800		4000	

Corner A

cylinder deadbolt

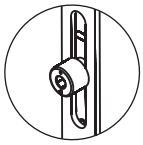

Catalogue No **005-012**

mushroom deadbolt

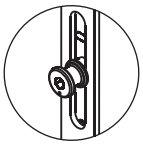

Catalogue No **005-002**

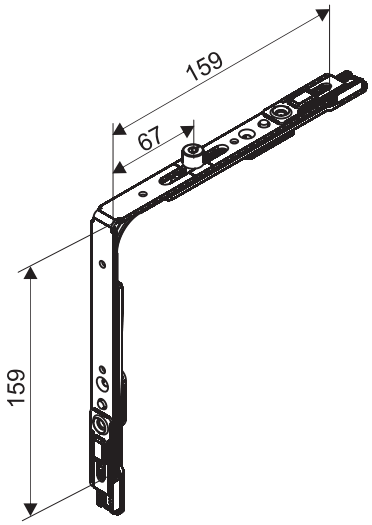

USE:
In sashes of windows **RU** (Dr and Tw)
Corner A is the basic subassembly in the hardware transmitting drive from drive gear to stay. In the lower part of the sash with striker plate **PWD** enables its tilting.
Scope of use: Sw > 400 mm.

IMPORTANT: corner A must be used with hardware with tilt restrictor for Sw > 1200 (mm).

PACKING

Subassembly		length [mm]	width [mm]	height [mm]	pcs/ box	box weight [kg]
A	box	400	290	80	50	11,00
	pallet	1200	800		4000	

Corner S

cylinder deadbolt

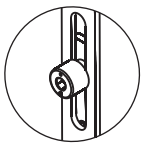

Catalogue No **005-006**

mushroom deadbolt

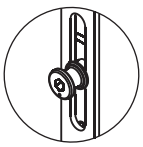

Catalogue No **005-007**

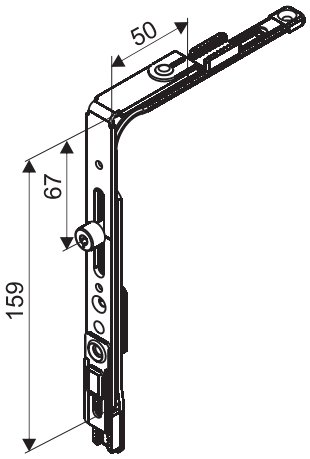

USE:
In sashes of windows **RU** (Dr and Tw).
Corner S is a basic subassembly in the hardware transmitting drive from drive gear to stay.
Scope of use: Sw > 290 to 400 mm.

PACKING

Subassembly		length [mm]	width [mm]	height [mm]	pcs/ box	box weight [kg]
S	box	400	290	80	50	7,90
	pallet	1200	800		4000	

Corner RS

cylinder deadbolt

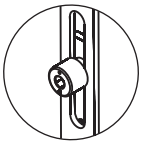

Catalogue No **005-014** left
Catalogue No **005-015** right

mushroom deadbolt

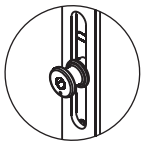

Catalogue No **005-004** left
Catalogue No **005-005** right

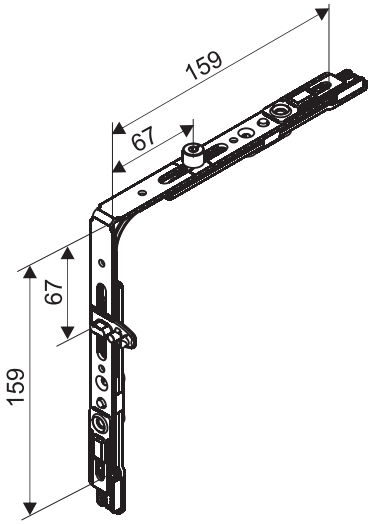

EXAMPLES OF USE

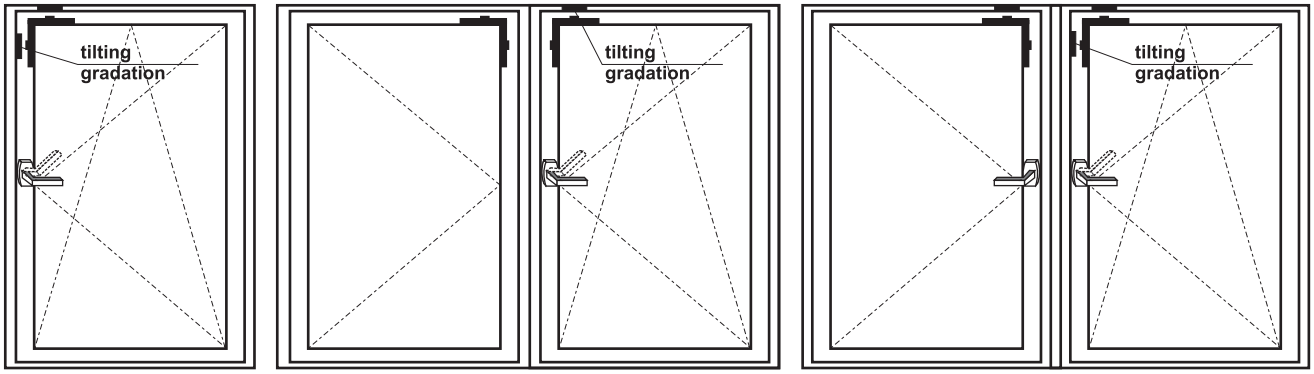

1 - sash windows | windows with movable post | 2 - sash windows

USE:
In sashes of windows **RU** (Tw) basic subassembly transmitting drive from drive gear to stay and other hardware subassemblies.
Corner **RS** enables gradation of tilting range of the sash in the following scopes:
Ist degree - slit size ca 20 mm.
2nd degree - slit size ca 30 mm.
Use with striker plate **RS 13**.
Additional function of the corner is unsealing (micro-ventilation) by setting the slit at ca 6mm ± 1 mm.
All the corner **RS** functions work with the handle in the middle position at 45° angle, between the "tilted" and "turned" position.

Scope of use: Sw > 400 mm, but Sw < 1000 mm
Maximum weight of the sash 60 kg.

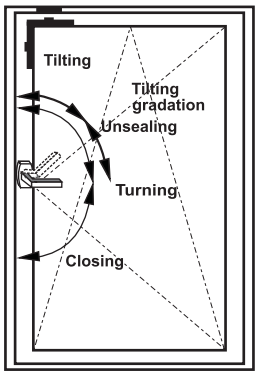

PACKING

Subassembly		length [mm]	width [mm]	height [mm]	pcs/ box	box weight [kg]
RS	box	400	290	80	50	11,12
	pallet	1200	800		4000	

Corner B

cylinder deadbolt

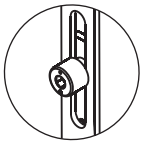

Catalogue No **005-016**

mushroom deadbolt

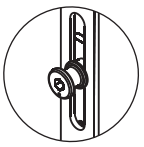

Catalogue No **005-008**

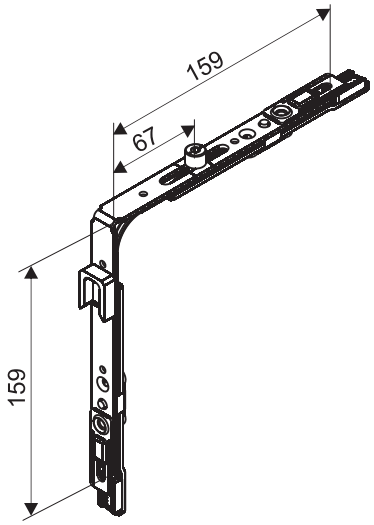

USE:
In sashes of windows with movable post, where it is necessary to transmit the drive to horizontal upper part of the sash.

Scope of use: Sw > 400 mm.

PACKING

Subassembly		length [mm]	width [mm]	height [mm]	pcs/ box	box weight [kg]
B	box	400	290	80	50	10,60
	pallet	1200	800		4000	

Corner BD

cylinder deadbolt

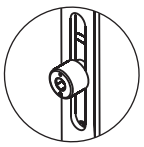

Catalogue No **005-017**

mushroom deadbolt

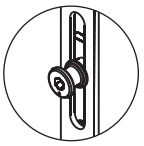

Catalogue No **005-009**

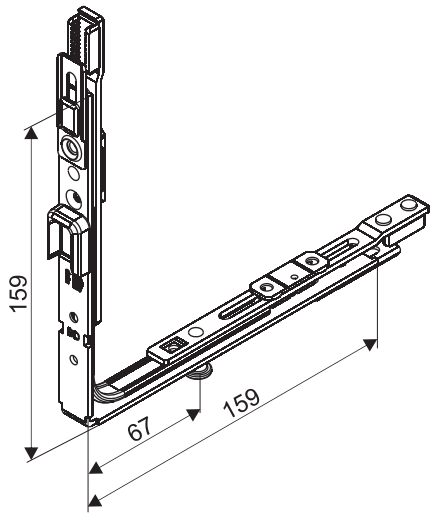

USE0:
In sashes of windows with movable post where it is necessary to transmit the drive to horizontal lower part of the sash. In set with drive gear BM or BZ.

Scope of use: Sw > 400 mm.

PACKING

Subassembly		length [mm]	width [mm]	height [mm]	pcs/ box	box weight [kg]
BD	box	400	290	80	50	10,60
	pallet	1200	800		4000	

Corner BR

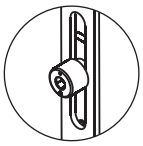

cylinder deadbolt

Catalogue No **005-020**

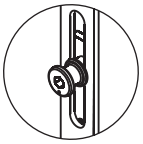

mushroom deadbolt

Catalogue No **005-019**

Striker plate and screws in set

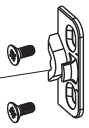

SPECIAL ORDER ONLY!!

USE:
In window with movable post as an element enabling micro-ventilation in the vertical part of the sash. Locking on horizontal frame. Striker plate R and screws in set.

Corner E

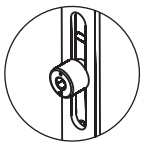

cylinder deadbolt

Catalogue No **005-018**

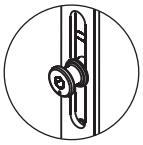

mushroom deadbolt

Catalogue No **005-010**

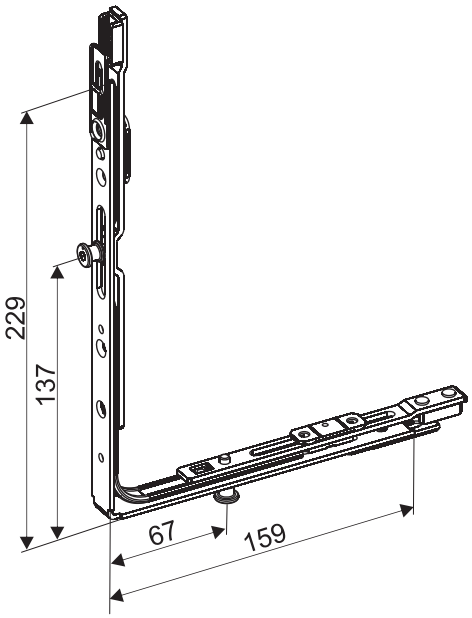

USE:
In sashes of PVC-U windows (arched, trapezoid) as an element transmitting drive from drive gear to the rear part of the sash.

PACKING

Subassembly		length [mm]	width [mm]	height [mm]	pcs/ box	box weight [kg]
E	box	400	290	80	20	4,60
	pallet	1200	800			

End 1

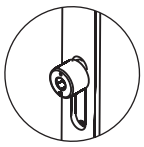

cylinder deadbolt

Catalogue No **007-001**

mushroom deadbolt

Catalogue No **007-010**

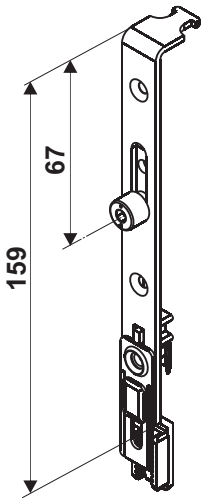

USE:
In sashes of windows **U and R** (Dr and Tw).
Transmits drive in the upper part of the sash
Deadbolt throw = 17 mm.

PACKING

Subassembly		length [mm]	width [mm]	height [mm]	pcs/ box	box weight [kg]
1	box	300	180	180	150	14,00
	pallet	1200	800		9600	

End 2

Catalogue No **007-002**

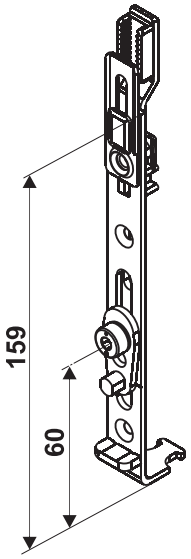

USE:
In sashes of windows **RU** (Dr, Tw) with drive gear M.
Transmits drive in the lower part of the sash
Deadbolt throw = 2 × 17 mm
In hardware TwO and Dr S5 recommended mainly for drive gears M1, M2 and M3.

PACKING

Subassembly		length [mm]	width [mm]	height [mm]	pcs/ box	Box weight [kg]
2	box	300	180	180	150	15,00
	pallet	1200	800		9600	

End 2A

Catalogue No **007-003**

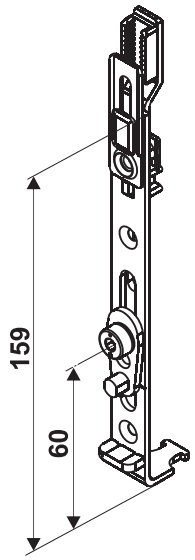

USE:
In sashes of windows **RU** (Dr and Tw) with drive gear M.
Transmits drive in the lower part of the sash.
Deadbolt throw = 2 × 17 mm
In TwO hardware recommended mainly for drive gears M4 and M5.

PACKING

Subassembly		length [mm]	width [mm]	height [mm]	pcs/ box	Box weight [kg]
2/A	box	300	180	180	150	15,00
	pallet	1200	800		9600	

End 2B

Catalogue No **007-004**

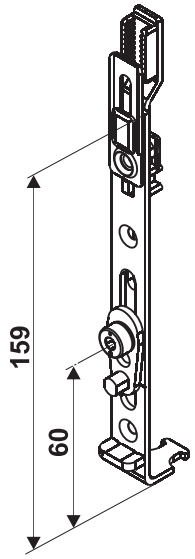

USE:
In sashes of windows **RU** (Dr and Tw) with drive gear M.
Transmits drive in the lower part of the sash.
Deadbolt throw =2×17mm.
Recommended for height scope **Hw < 600 mm**.
In hardware TwO and Dr S5 recommended mainly for drive gear M0.

PACKING

Subassembly		length [mm]	width [mm]	height [mm]	pcs/ box	box weight [kg]
2/B	box	300	180	180	150	15,00
	pallet	1200	800		9600	

End 3

Catalogue No **007-006**

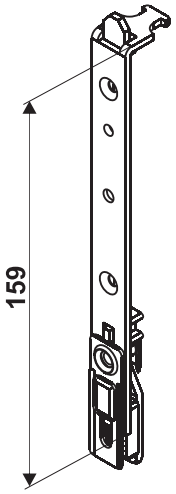

USE:
In sashes of windows with a so-called movable post **(version with drive gear B or with footing and connector)**. Transmits drive in the upper part of the sash. Works with adjustable striker plate B.

PACKING

Subassembly		length [mm]	width [mm]	height [mm]	pcs/ box	box weight [kg]
3	box	300	180	180	150	13,89
	pallet	1200	800		9600	

End 4

Catalogue No **007-007**

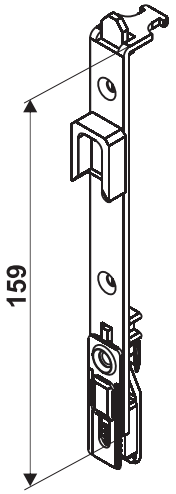

USE:
In sashes of windows (Dr and Tw) with a so-called movable post **(version with drive gear B or footing and connector).**
Transmits drive to corner drive gear in the upper part of the sash. Works with adjustable striker plate B.

PACKING

Subassembly		length [mm]	width [mm]	height [mm]	pcs/ box	box weight [kg]
4	box	300	180	180	150	15,41
	pallet	1200	800		9600	

End 5-U

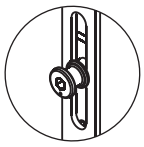

mushroom deadbolt

Catalogue No **007-013**

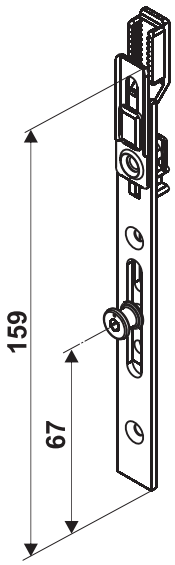

USE:
In sashes of windows **RU** (Dr and Tw).
In hardware version with enhanced resistance to burglary as an additional element hindering burglary. Subassembly closing the connector in lower or rear part of the sash.

PACKING

Subassembly		length [mm]	width [mm]	height [mm]	pcs/ box	box weight [kg]
5-U	box	300	180	180	150	13,3
	pallet	1200	800		9600	

End 5

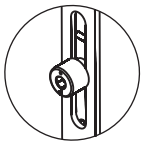

cylinder deadbolt

Catalogue No **007-008**

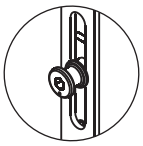

mushroom deadbolt

Catalogue No **007-011**

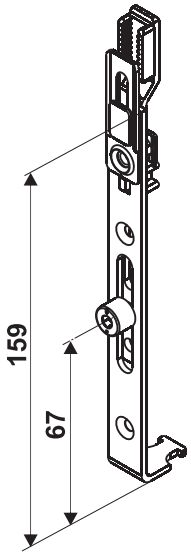

USE:
In sashes of windows **U** and **R** (Dr and Tw) with drive gear M and end 1.
Transmits drive in lower part of the sash.
Deadbolt throw = 2 × 17 mm.

PACKING

Subassembly		lenght [mm]	width [mm]	height [mm]	pcs/ box	box weight [kg]
5	box	300	180	180	150	13,89
	pallet	1200	800		9600	

End 6

cylinder deadbolt

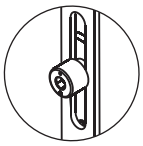

Catalogue No **007-009**

mushroom deadbolt

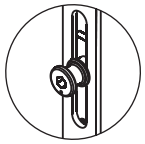

Catalogue No **007-012**

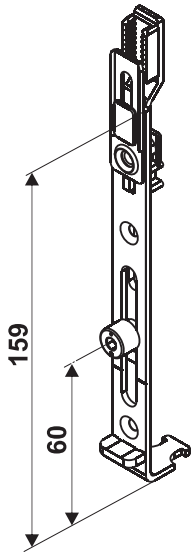

USE:
In sashes of windows **R** (Dr and Tw) with drive gear M.
Recommended in sashes Dr, with **Sw >1000 mm** and Tw, with **Sw > 800 mm**.
Transmits drive to corner gear in lower part of the sash.
Deadbolt throw = 2 × 17 mm

PACKING

Subassembly		length [mm]	width [mm]	height [mm]	pcs/ box	box weight [kg]
6	box	300	180	180	150	13,89
	pallet	1200	800		9600	

End 8

cylinder deadbolt

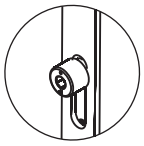

Catalogue No **007-014**

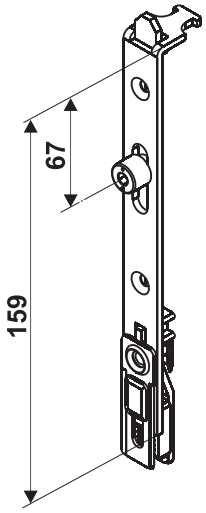

USE:
In sashes of windows **R** (Dr and Tw) with a so-called movable post with drive gear M or Z.
Possible use in set with locks, drive gear B or BM.
Transmits drive to corner drive gear in upper part of the sash.
Deadbolt throw = 17 mm.

PACKING

Subassembly		length [mm]	width [mm]	height [mm]	pcs/ box	box weight [kg]
8	box	300	180	180	150	13,89
	pallet	1200	800		9600	

Corner drive gear NR

Subassembly	Catalogue No		Scope of use Hw [mm]	A [mm]	L [mm]
	mushroom deadbolt	cylinder deadbolt			
NR-0	**006-001**	**006-012**	< 800	-	192
NR-1	**006-002**	**006-013**	801 - 1250	429	531
NR-2	**006-003**	**006-014**	1251 - 1450	639	741
NR-3	**006-004**	**006-015**	1451 - 1650	799	901
NR-4	**006-005**	**006-016**	1651 - 2400	639	1526

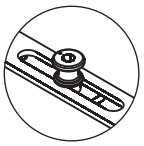
mushroom deadbolt

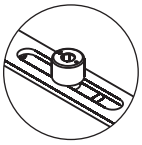
cylinder deadbolt

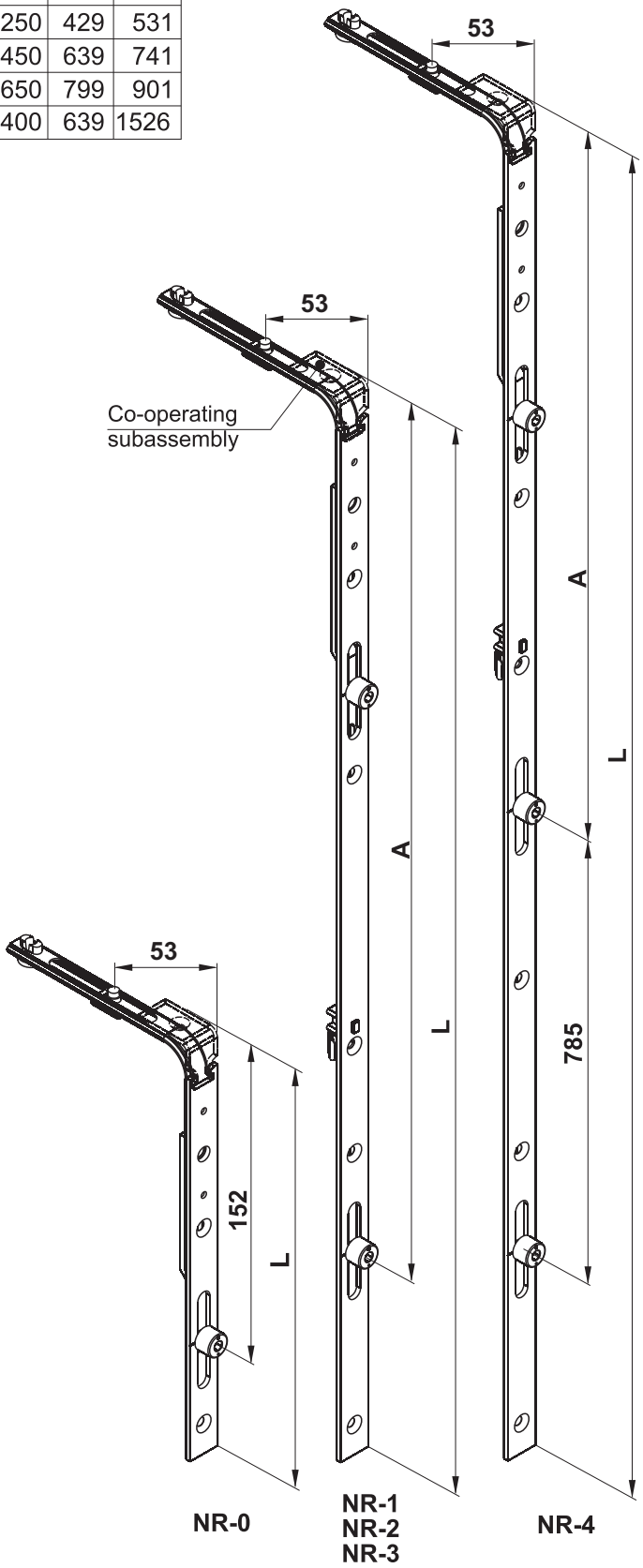

USE:
- In sashes of windows **RU** (Dr and Tw) as subassembly enabling middle locking from the side of hinges and in the lower part of the sash.
- In sashes of windows **R** (Dr and Tw) for locking in the lower and upper part of the sash.

RULES OF USE:

Wooden windows Hw > 1000 mm
Sw > 1000 mm

PVC-U windows Hw > 800 mm
Sw > 800 mm

MARKING:
L - total length
A -dimension of deadbolt position

PACKING

Subassembly		length [mm]	width [mm]	height [mm]	pcs/ box	box weight [kg]
Nr0	box	260	170	50	20	2,20
	pallet	1200	800		1600	
Nr1	box	610	170	50	20	5,37
	pallet	1200	800		1600	
NR2	box	820	170	50	20	7,47
	pallet	1200	800		1200	
NR3	box	980	170	50	20	9,05
	pallet	1200	800		800	
NR4	box	1610	170	50	20	15,00
	pallet	1600	800		800	

Corner drive gear NC

Subassembly	Catalogue No		Scope of use Hw [mm]	A [mm]	L [mm]
	mushroom deadbolt	cylinder deadbolt			
NC-1	**006-006**	**006-017**	801 - 1250	429	531
NC-2	**006-007**	**006-018**	1251 - 1450	639	741
NC-3	**006-008**	**006-019**	1451 - 1650	799	901
NC-4	**006-009**	**006-020**	1651 - 2400	639	1526

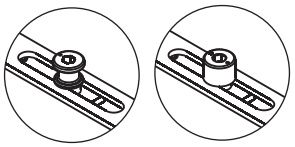

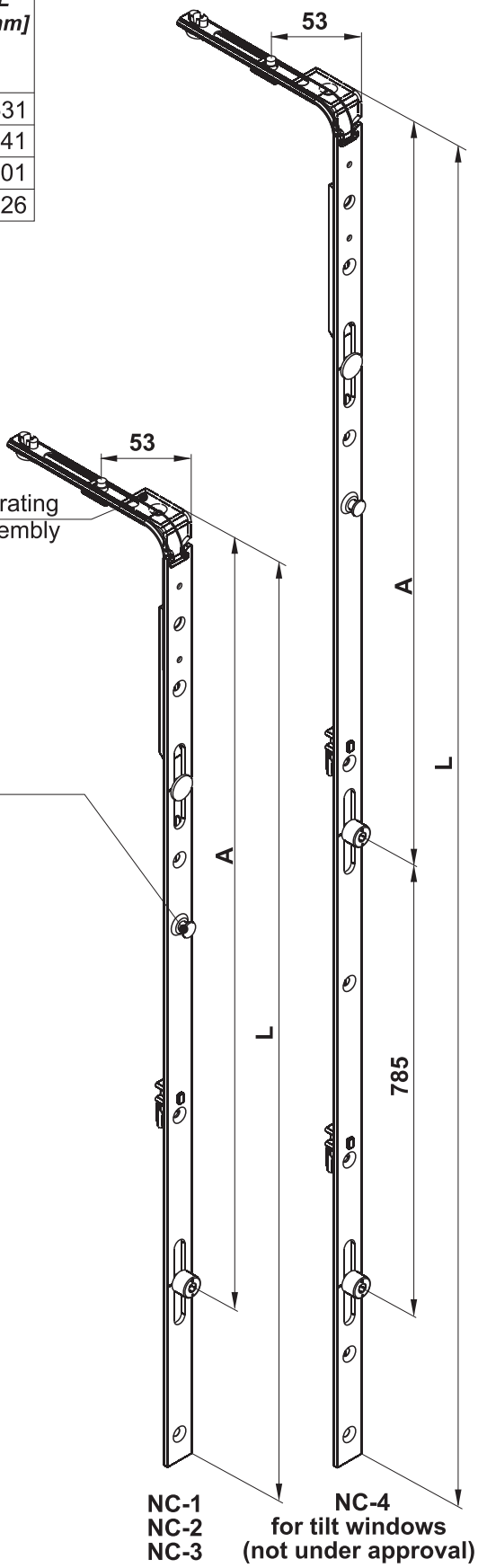

USE:
- in sashes of windows **U** (Dr and Tw) as a side locking of the sash. Works with scissors stay.

RULES OF USE:
Wooden windows: Hw > 1000 mm

PVC-U windows: Hw > 800 mm

MARKING:
L - total length
A - dimension of deadbolt position

PACKING

Subassembly		length [mm]	width [mm]	height [mm]	pcs/ box	box weight [kg]
NC1	box	610	170	50	20	5,20
	pallet	1200	800		1600	
NC2	box	820	170	50	20	7,10
	pallet	1200	800		1200	
NC3	box	980	170	50	20	9,05
	pallet	1200	800		800	
NC4	box	1610	170	50	20	15,00
	pallet	1600	800		800	

Fastening corner drive gear NSU

Subassembly	Catalogue No		Scope of use Sw lub Hw [mm]	A [mm]	L [mm]
	mushroom deadbolt	cylinder deadbolt			
NSU-0	**006-010**	**006-021**	Sw >800 (Tw) 1000 (Dr)	-	254
NSU-1	**006-011**	**006-022**	Hw >800 (Tw) 1000 (Dr)	429	531

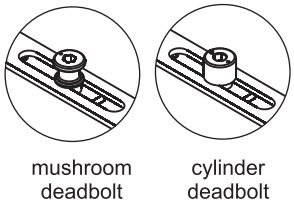

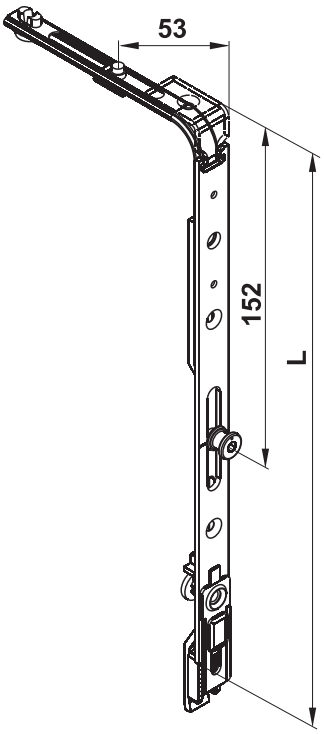

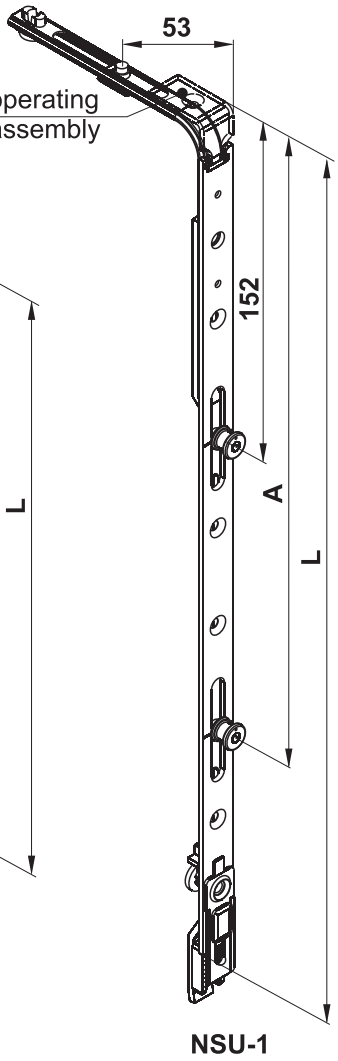

USE:
In sashes of windows **RU** (Dr and Tw) in hardware version (**ROMB 3000**) with enhanced resistance to burglary as a subassembly enabling additional locking in the lower part of the sash from the side of hinges. Works with fastening connector /ŁS/.
Drive gear NSU is recommended in arched and trapezoid windows where it is necessary to transmit drive through the lower part of the sash to its rear part.

RULES OF USE:
Wooden windows: Hw and Sw > 1000 mm

PVC-U windows: Hw and Sw > 800 mm

MARKING:
L -total length
A -dimension of deadbolt position

PACKING

Subassembly		length [mm]	width [mm]	height [mm]	pcs/ box	box weight [kg]
NSU-0	box	410	170	50	20	3,20
	pallet	1200	800			
NSU-1	box	610	170	50	20	5,30
	pallet	1200	800			

Footing BM

Footing	*Catalogue No*	*L [mm]*	*A [mm]*	*Scope of use Hw [mm]*
BM 1	**012-021**	285	225	905 - 1320 1265 - 1680 1625 - 2040
BM 2	**012-022**	535	475	1985 - 2400

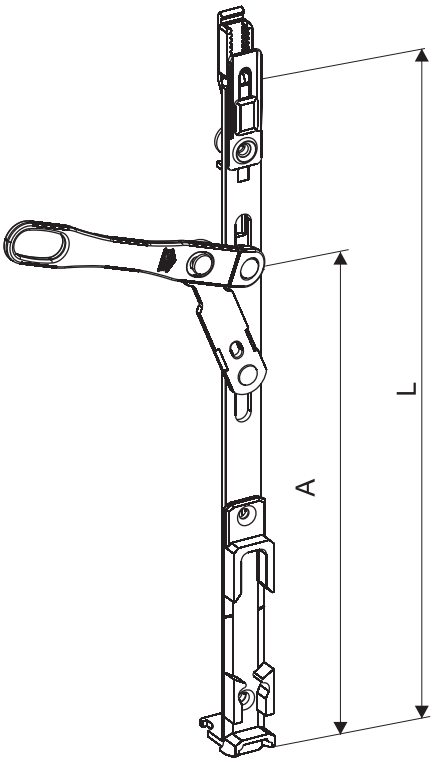

USE:
In sashes of windows with a so-called movable post (Dr and Tw) with notch clearance 12 mm.
In set with drive gear M.
Works with connectors BM and corner drive gear NR.
Recommended in sashes of windows Dr with **Sw > 1000 mm**
Tw with **Sw > 800 mm**

PACKING

Subassembly		length [mm]	width [mm]	height [mm]	pcs/ box	box weight [kg]
BM1	box	470	85	50	10	1,7
	pallet	1200	800		2400	
BM2	box	470	85	50	10	2,9
	pallet	1200	800		1200	

Upper lock DR

Catalogue No **014-002**

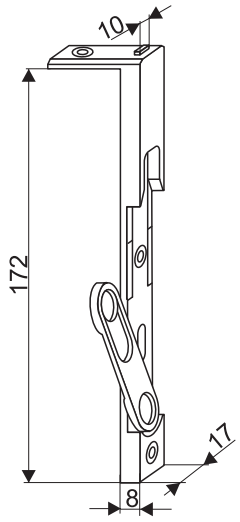

USE:
Upper lock is designed for locking sash **R** with double-window set with a so-called movable post. Used in **Dr** windows with notch clearance 11 or 12 mm. Works with adjustable striker plate **B**. cat. **020-005 Eurofalz**. The lock should be fixed flat without groove
Recommended in sashes with Sw < 1000 mm
Locking slider throw = 8mm

PACKING

Subassembly		length [mm]	width [mm]	height [mm]	pcs/ box	box weight [kg]
upper	box	300	180	180	100	8,70
	pallet	1200	800			

Lower lock DR

Catalogue No **014-001**

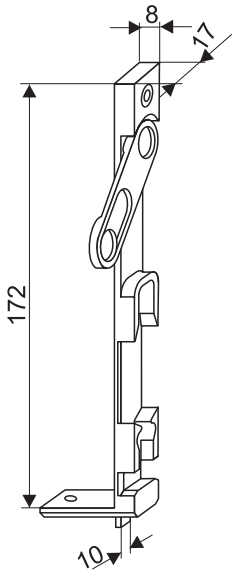

USE:
Lower lock is designed for locking sash **R** with double-window set with a so-called movable post. Also used in **Dr** windows with notch clearance 11 or 12 mm.
Works with adjustable striker plate **B**. cat. **020-005 Eurofalz**.
The lock should be fixed flat without groove.
Recommended in sashes with Sw <1000 mm
Locking slider throw = 8 mm

PACKING

Subassembly		length [mm]	width [mm]	height [mm]	pcs/ box	box weight [kg]
lower	box	300	180	180	100	9,00
	pallet	1200	800			

Upper lock Tw 16

Catalogue No **014-004**

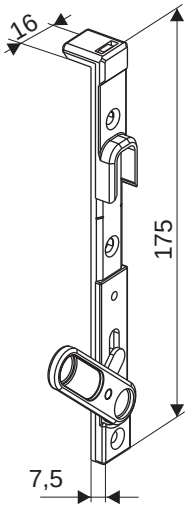

USE:
Upper lock is designed for locking sash **R** in double window set with a so-called movable post. Used in windows **Tw** with notch clearance 12 mm, (fixed in hardware groove). Works with adjustable striker plate **B**.
Recommended in sashes Tw with Sw < 800 mm
Locking slider throw = 8 mm

PACKING

Subassembly		length [mm]	width [mm]	height [mm]	pcs/ box	box weight [kg]
upper Tw 16	box	300	180	180	100	11,30
	pallet	1200	800			

Lower lock Tw 16

Catalogue No **014-003**

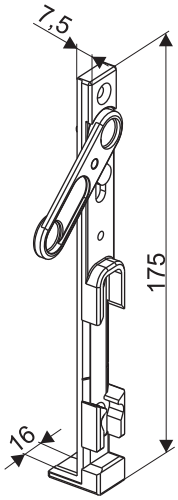

USE:
Lower lock is designed for locking sash **R** in double window set with a so-called movable post. Used in windows **Tw** with notch clearance 12 mm, (fixed in hardware groove). Works with adjustable striker plate **B**.
Recommended in sashes Tw with Sw < 800 mm
Locking slider throw = 8 mm

PACKING

Subassembly		lenght [mm]	width [mm]	height [mm]	pcs/ box	box weight [kg]
lower Tw 16	box	300	180	180	100	11,80
	pallet	1200	800			

Upper lock Dr 7/8

Catalogue No **014-006**

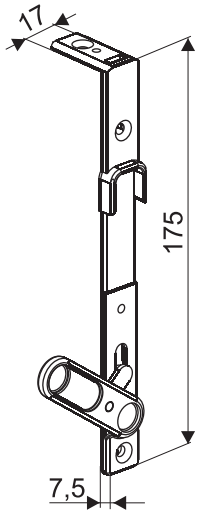

USE:
Upper lock is designed for locking the sash **R** in double-window set with a so-called movable post. Used in **Dr** windows with notch clearance 11 or 12 mm. Works with adjustable striker plate **B7/8**. **Euronut** cat. No **020-024** and **Eurofalz** cat. No **020-007.** The lock should be fixed without pads by fastening directly in groove Euronut.
Recommended in sashes Sw < 1000 mm
Locking slider throw = 8mm

PACKING

Subassembly		length [mm]	width [mm]	height [mm]	pcs/ box	box weight [kg]
upper	box	300	180	180	100	8,70
	pallet	1200	800			

Lower lock Dr 7/8

Catalogue No **014-005**

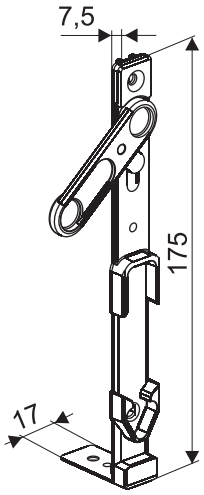

USE:
Lower lock is designed for locking the sash **R** in double-window set with a so-called movable post. Used in windows **Dr** with notch clearance 11 or 12 mm. Works with adjustable striker plate **B7/8. Euronut** cat. No **020-024** and **Eurofalz** cat. No **020-007.**
The lock should be fixed without pads by fastening directly in groove Euronut.
Recommended in sashes Sw < 1000 mm
Locking slider throw = 8mm

PACKING

Subassembly		lenght [mm]	width [mm]	height [mm]	pcs/ box	box weight [kg]
lower	box	300	180	180	100	9,00
	pallet	1200	800			

Connector BM

Subassembly	*Catalogue No*	*Scope of use Hw [mm]*	*L [mm]*
BM 2	**013-001**	905 - 1320	875
BM 3	**013-002**	1265 - 1680	1235
BM 4	**013-003**	1625 - 2040	1595
BM 5	**013-004**	1985 - 2400	1705

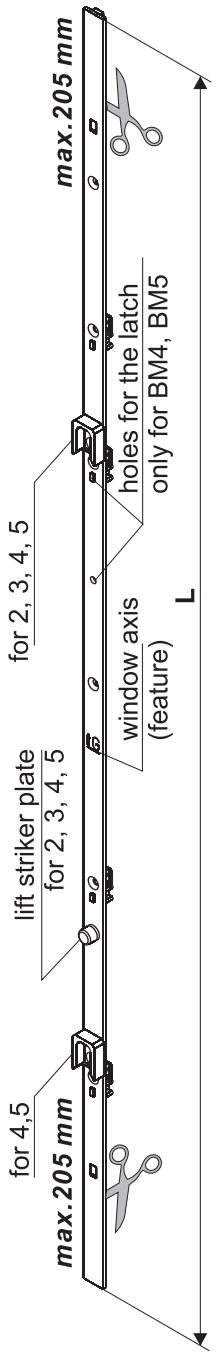

USE:
In sashes of windows with a so-called movable post (Dr and Tw) with notch clearance 11 or 12 mm.
In hardware set with drive gear M.
Works with ends 3 and 4, footings BM.
Peripheral striker plate is part of the set with connector BM.
Recommended in sashes Dr with **Sw > 1000 mm**, Tw with **Sw > 800 mm**.

PACKING

Subassembly		length [mm]	width [mm]	height [mm]	pcs/ box	box weight [kg]
BM2	box	930	85	50	10	3,9
	pallet	1200	800		1200	
BM3	box	1420	85	50	10	5,6
	pallet	1600	800		800	
BM4	box	1600	85	50	10	7,2
	pallet	1600	800		800	
BM5	box	1870	85	50	10	7,8
	pallet	2200	800		800	

Fastening connector ŁS

Subassembly	Catalogue No		L [mm]	Scope of use Sw lub Hw [mm]	
	with mushroom deadbolt	with cylinder deadbolt		NSU-1	NSU-0
ŁS 1	-	**013-009**	500	980-1190	700- 910
ŁS 2	**013-020**	**013-010**	875	1150-1560	875-1280
ŁS 3	**013-021**	**013-011**	1235	1510-1920	1235-1640
ŁS 4	**013-022**	**013-012**	1595	1870-2280	1595-2000
ŁS 5	**013-023**	**013-013**	1705	1980-2395	1705-2110

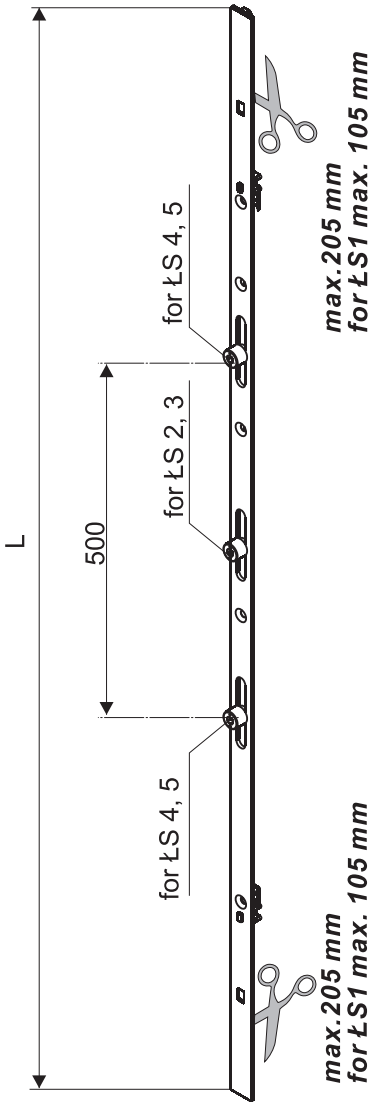

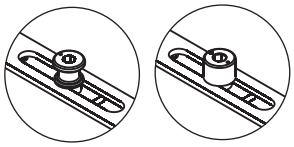

USE:
In sashes of windows **RU** (Dr and Tw) in hardware version (**ROMB 3000**) with enhanced resistance tu burglary as a subassembly connecting two elements, eg.: fastening corner drive gear with end 5U or corner U with end 5U.
Recommended in arched and trapezoid windows with Sw or Hw > 800 mm, for transmitting drive through lower part of the sash to its rear part.

PACKING

Subassembly		length [mm]	width [mm]	height [mm]	pcs/ box	box weight [kg]
ŁS 1	box	800	85	50	10	2,5
	pallet	1230	800		1200	
ŁS 2	box	930	85	50	10	4,0
	pallet	1200	800		800	
ŁS 3	box	1420	85	50	10	6,0
	pallet	1600	800		800	
ŁS 4	box	1600	85	50	10	7,5
	pallet	1600	800		800	
ŁS 5	box	1870	85	50	10	8,0
	pallet	2200	800		800	

Extension rod 750

Cat. No **008-003** cylinder deadbolt
Cat. No **008-005** mushroom deadbolt

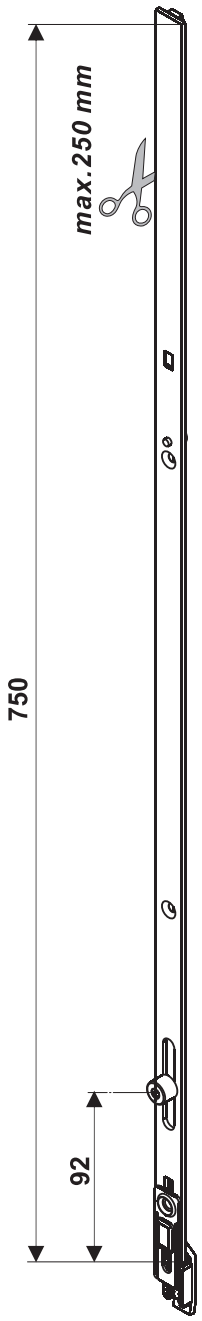

Extension rod 500

Cat. No **008-002** cylinder deadbolt
Cat. No **008-004** mushroom deadbolt

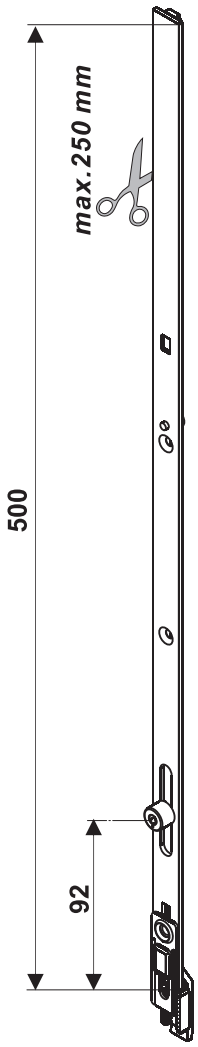

Extension rod 250

Cat. No **008-001**

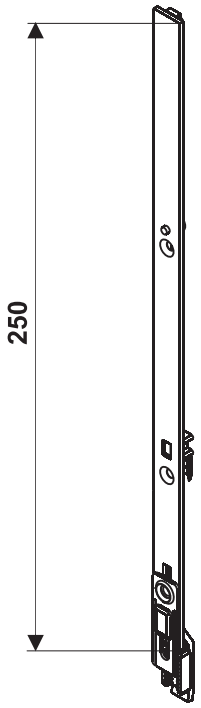

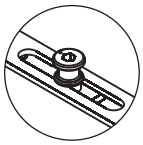

mushroom deadbolt

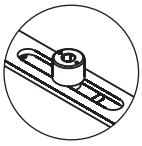

cylinder deadbolt

USE:
Used if it is necessary to decrease position of the handle in sashes of the windows **R** and **RU** (Dr and Tw) with drive gear Z or drive gear M.

PACKING

Subassembly		length [mm]	width [mm]	height [mm]	pcs/ box	box weight [kg]
250	box	470	85	50	20	2,75
	pallet	1200	800			
500	box	660	85	50	20	5,14
	pallet	1200	800			
750	box	850	85	50	20	7,30
	pallet	1200	800			

Corner extension rod D

Subassembly	Catalogue No		L [mm]	A [mm]
	with mushroom deadbolt	with cylinder deadbolt		
1 D	**008-014**	**008-008**	330	270
2 D	**008-016**	**008-010**	540	480
3 D	**008-018**	**008-012**	700	640

WHILE THE STOCK LASTS !!!

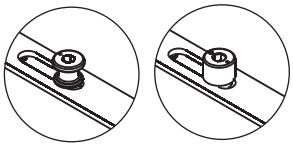

mushroom deadbolt cylinder deadbolt

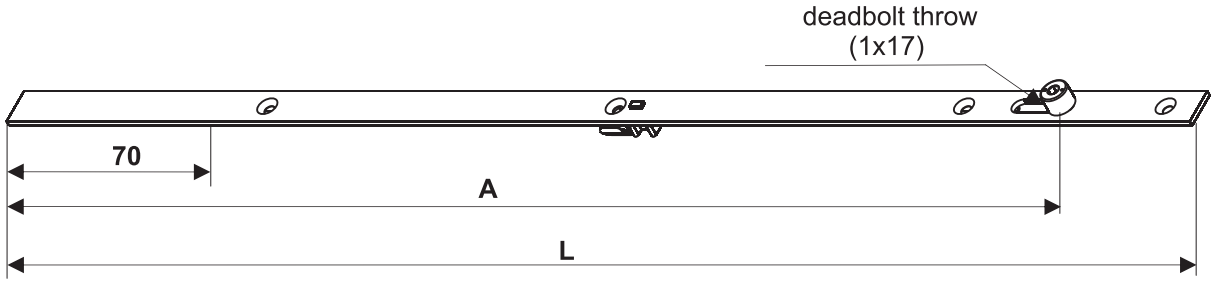

USE:
In sashes of windows **R** (Dr and Tw) as a subassembly extending corner arm, with possibility of additional locking in the **lower part of the sash**. Alternative solution for set of ROMB hardware: corner drive gear, ends with drive gear M.

NOTE:
deadbolt position as in corner drive gears: Nr 1, Nr 2, Nr 3.
Jig for striker plates positioning cat. No. **038-017** (bottom of the sash).

PACKING

Subassembly		length [mm]	width [mm]	height [mm]	pcs/ box	box weight [kg]
1 D	box	380	80	50	20	2,96
	pallet	1200	800			
2 D	box	660	80	50	20	4,90
	pallet	1200	800			
3 D	box	720	80	50	20	6,90
	pallet	1200	800			

Corner extension rod G

Subassembly	Catalogue No		L [mm]	A [mm]
	with mushroom deadbolt	with cylinder deadbolt		
1 G	**008-015**	**008-009**	330	270
2 G	**008-017**	**008-011**	540	480
3 G	**008-019**	**008-013**	700	640

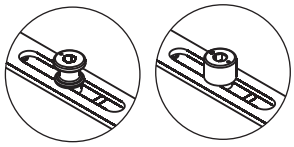

mushroom deadbolt cylinder deadbolt

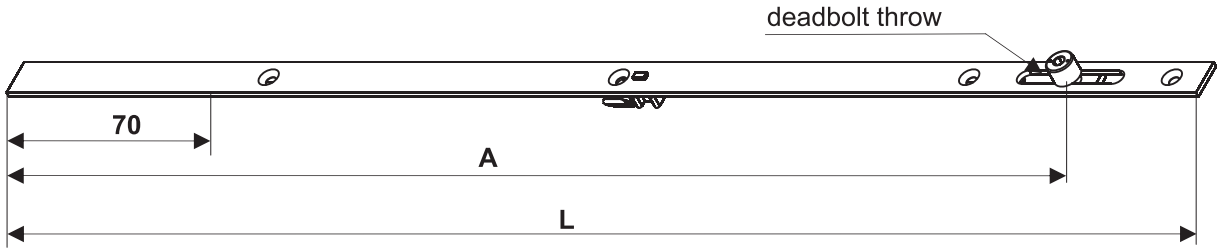

USE:
In sashes of windows **R** (Dr and Tw) as a subassembly extending corner arm, with possibility of additional locking **in upper part of the sash**.
In turn/tilt windows, in hardware version ROMB 2000, extension rod **G** should be used in lower part of the sash.

NOTE:
deadbolt position as in corner drive gears: Nr 1, Nr 2, Nr 3.
Jig for positioning striker plates cat. No **038-016** (top of the sash).
To limit the extent of displacement a **limiting pad** cat. No **032-015** should be used

PACKING

Subassembly		lenght [mm]	width [mm]	height [mm]	pcs/ box	box weight [kg]
1 G	box	380	80	50	20	2,80
	pallet	1200	800			
2 G	box	660	80	50	20	4,80
	pallet	1200	800			
3 G	box	720	80	50	20	6,80
	pallet	1200	800			

Connector 7.5 BM

Subassembly	*Catalogue No*	*Scope of use Hw [mm]*	*L [mm]*
7.5BM 2	**013-005**	905 - 1320	875
7.5BM 3	**013-006**	1265 - 1680	1235
7.5BM 4	**013-007**	1625 - 2040	1595
7.5BM 5	**013-008**	1985 - 2400	1705

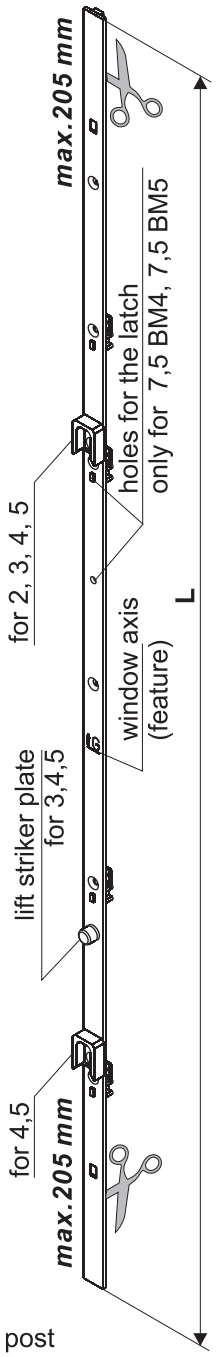

USE:
In sashes of windows with a so-called movable post (Dr and Tw) with notch clearance 11 or 12 mm.
In hardware set with drive gear 7.5 M.
Works with ends 3 and 4, footings BM.
Peripheral striker plate is part of a set with connector 7.5 BM.
Recommended in sashes Dr with **Sw > 1000 mm**, Tw with **Sw > 800 mm**.

PACKING

Subassembly		lenght [mm]	width [mm]	height [mm]	pcs/ box	box weight [kg]
7,5 Bm2	box	930	85	50	10	3,9
	pallet	1200	800		1200	
7,5 BM3	box	1420	85	50	10	5,6
	pallet	1600	800		800	
7,5 BM4	box	1600	85	50	10	7,2
	pallet	1600	800		800	
7,5 Bm5	box	1870	85	50	10	7,8
	pallet	2200	800		800	

Fastening connector ŁSM

Subassembly	Catalogue No		Scope of use Hw [mm]	L [mm]	A [mm]	B [mm]	C [mm]
	mushroom deadbolt	cylinder deadbolt					
ŁSM-0	**013-014**	**013-024**	505 - 600	280	140	25	
ŁSM-1	**013-015**	**013-025**	601 - 960	640	320	0	
ŁSM-2	**013-016**	**013-026**	961 - 1320	1000	500	109	
ŁSM-3	**013-017**	**013-027**	1321 - 1680	1360	680	109	
ŁSM-4	**013-018**	**013-028**	1681 - 2040	1720	860	350	350
ŁSM-5	**013-019**	**013-029**	2041 - 2400	2080	1040	350	350

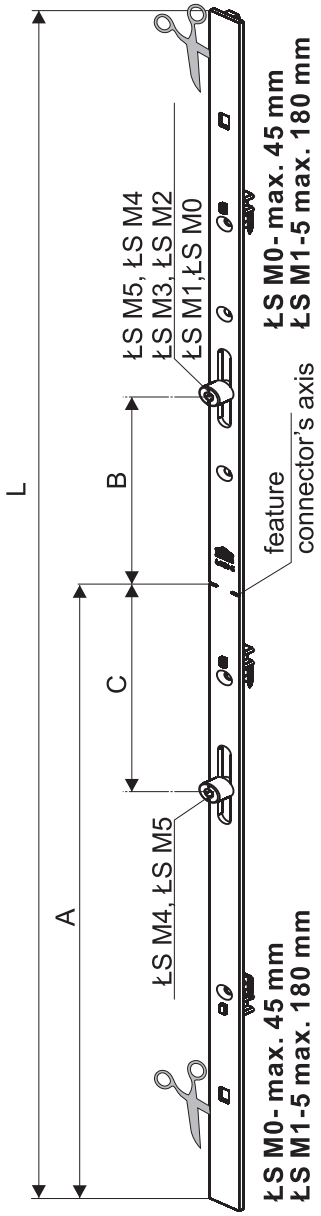

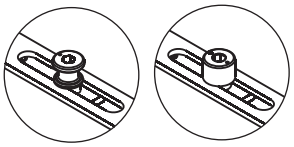
mushroom deadbolt
cylinder deadbolt

USE:
In sashes of slide windows (Dr and Tw) where it is necessary to connect hardware on the girth of the sash.

MARKING:
L - total length

PACKING

Subassembly		length [mm]	width [mm]	height [mm]	pcs/ box	box weight [kg]
ŁS M0	box	380	85	50	10	1,4
	pallet	1200	800		1200	
ŁS M1	box	660	85	50	10	3,0
	pallet	1200	800		1200	
ŁS M2	box	1100	85	50	10	4,7
	pallet	1200	800		800	
ŁS M3	box	1420	85	50	10	6,5
	pallet	1630	800		800	
ŁS M4	box	1730	85	50	10	8,1
	pallet	2200	800		800	
ŁS M5	box	2100	85	50	10	9,8
	pallet	2200	800		800	

Extension rod B

For **L** = **500** mm Cat. No **008-006**
For **L** = **750** mm Cat. No **008-007**

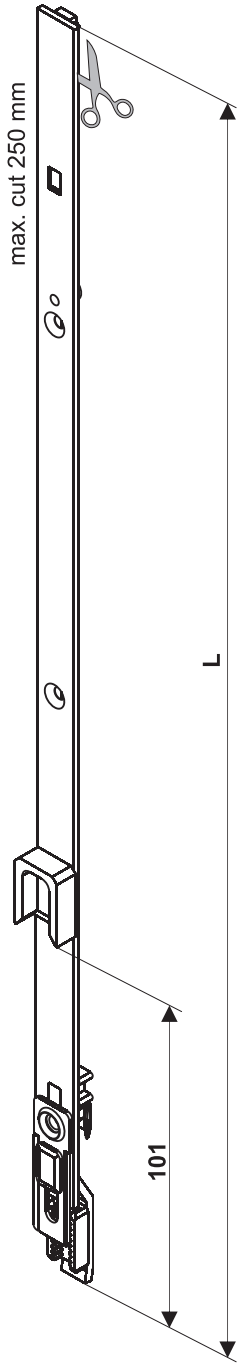

WHILE THE STOCK LASTS !!!

PACKING

Subassembly		length [mm]	width [mm]	height [mm]	pcs/ box	box weight [kg]
500	box	660	85	50	20	5,14
	pallet	1200	800			
750	box	850	85	50	20	7,30
	pallet	1200	800			

USE:
In windows with movable post **Dr** and **Tw**.

Stay arm Dr 11

Size	*Catalogue No*	*Scope of use Sw [mm]*	*L [mm]*	*B [mm]*	*C [mm]*	*feature*
Dr 1	**010-001**	290 - 510	236	65	29	11
Dr 2	**010-002**	511 - 830	321	80	29	
Dr 3	**010-003**	821 - 1450	461	120	29	

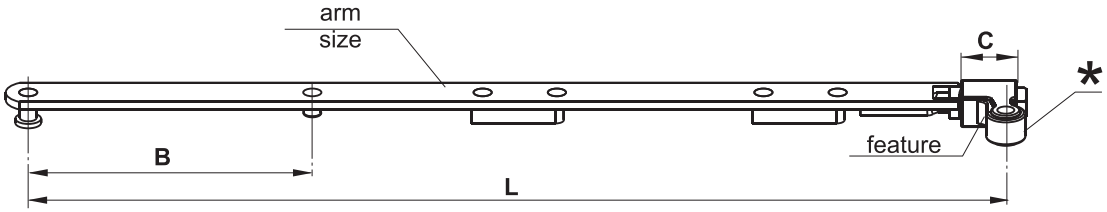

Bearing guard Nr VII

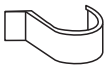

USE:
Subassembly fixed in the upper part of the frame's corner. When combined with the stay it enables tilting the window sashes in windows **RU** (Dr) with notch clearance Dr 12mm. In windows with sash weighing up to 100 kg it may be used with upper hinge bracket Dr-L (light version).
In windows with max. sash weight up to 130 kg used with upper hinge bracket Dr-C.
Depending on the needs arm Dr 11 may be used as either left or right arm (by turning the bearing*).

IMPORTANT:
guard should be fitted before placing the arm into upper hinge bracket.

PACKING

Subassembly		length [mm]	width [mm]	height [mm]	pcs/ box	box weight [kg]
Dr11/1	box	380	50	85	10	1,59
	pallet	1200	800		2400	
Dr11/2	box	470	50	85	10	2,05
	pallet	1200	800		1200	
Dr11/3	box	660	50	85	10	2,63
	pallet	1200	800		1200	

Stay arm TwO 9

Size	*feature*	*Catalogue No*	*Scope of use Sw* [mm]	*L* *[mm]*	*B* *[mm]*
RR1	9	**010-007**	290-510	240	65
RR2		**010-008**	511-830	325	80
RR3		**010-009**	821-1450	465	120

Stay arm TwO 13, TwO 14

Size	*feature*	*Catalogue No*	*Size*	*feature*	*Catalogue No*	*Scope of use Sw* [mm]	*L* *[mm]*	*B* *[mm]*
RR1	13	**010-010**	RR1	14	**010-016**	290-510	240	65
RR2		**010-011**	RR2		**010-017**	511-830	325	80
RR3		**010-012**	RR3		**010-018**	821-1450	465	120

Stay arm TwO 13/21

Size	*feature*	*Catalogue No*	*Scope of use Sw* [mm]	*L* *[mm]*	*B* *[mm]*
RR1	13/21	**010-013**	290-510	241,5	65
RR2		**010-014**	511-830	326,5	80
RR3		**010-015**	821-1450	466,5	120

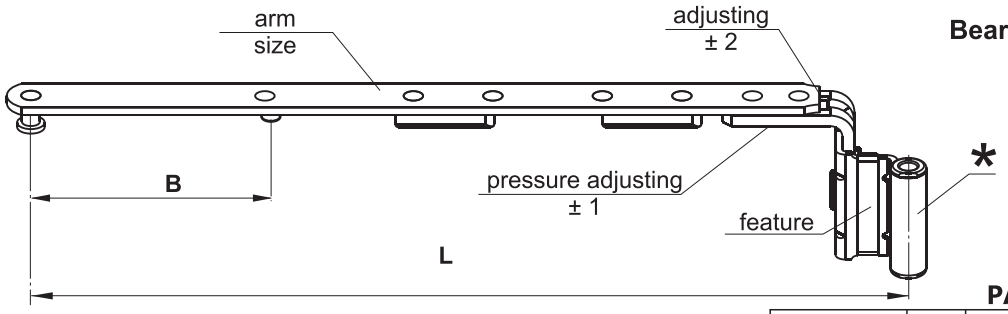

Bearing guard Nr IV A

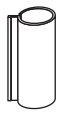

USE:
Subassembly fixed in the upper part of the frame corner. When combined with stay it enables tilting the window sashes in windows **RU** (Tw).
Works with upper hinge bracket TwO (**bracket flushed with the edge of the sash**). Depending on the needs it can be used as either left or right arm (by turning the bearing* and driving in a stud)

IMPORTANT:
guard should be fitted before placing the arm into upper hinge bracket.

NOTE:
stay arm **TwO 14**, to be used when it is necessary to increase the pressure on the sash.

PACKING

Subassembly		length [mm]	width [mm]	heigth [mm]	pcs/ box	box weight [kg]
101-727-000	box	380	100	50	10	1,91
	pallet	1200	800		2400	
101-728-000	box	380	100	50	10	2,39
	pallet	1200	800		2400	
101-729-000	box	660	100	50	10	2,93
	pallet	1200	800		2400	
101-730-000	box	380	100	50	10	1,90
101-853-000	pallet	1200	800		2400	
101-731-000	box	380	100	50	10	2,35
101-854-000	pallet	1200	800		2400	
101-732-000	box	660	100	50	10	2,90
101-855-000	pallet	1200	800		2400	
101-717-000	box	380	100	50	10	1,90
	pallet	1200	800		2400	
101-718-000	box	380	100	50	10	2,35
	pallet	1200	800		2400	
101-719-000	box	660	100	50	10	2,90
	pallet	1200	800		2400	

Stay arm S5

Size	*Catalogue No*	*Scope of use Sw [mm]*	*Feature*
RR1	**010-004**	290 - 510	Dr 12/18
RR2	**010-005**	511 - 830	
RR3	**010-006**	821 - 1450	

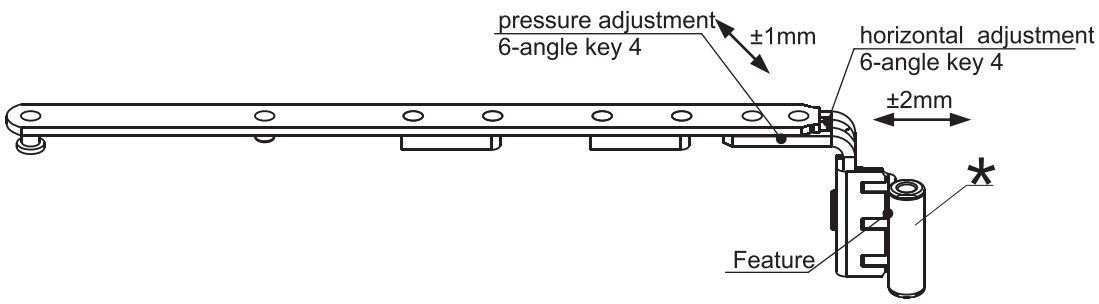

Bearing guard Nr IV A

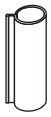

USE:
in windows **RU** (Dr) with max. sash weight 100 kg.
Works with upper hinge bracket S5.

IMPORTANT:
place the guard before connecting the arm with upper hinge bracket.
Depending on the needs it can be used as either left or right arm (by turning the bearing * and driving in the stud).

PACKING

Subassembly		length [mm]	width [mm]	height [mm]	pcs/ box	box weight [kg]
RR1	box	380	95	60	10	1,90
	pallet	1200	800			
RR2	box	475	95	60	10	2,25
	pallet	1200	800			
RR3	box	665	95	60	10	2,80
	pallet	1200	800			

Stay

Table for the selection and use of stay and stay arm subassembly	
Stay (size)	**Stay arm (size)**
Stay 1	RR 1/9 RR 1/13 RR 1/13/21 RR 1/S5 RR Dr1/11
Stay 2 Stay 2A Stay 2C	RR 2/9 RR 2/13 RR 2/13/21 RR 2/S5 RR Dr2/11
Stay 3 Stay 4 Stay 4A	RR 3/9 RR 3/13 RR 3/13/21 RR 3/S5 RR Dr3/11

Subassembly	Catalogue No		Scope of use Sw [mm]	L [mm]	W [mm]
	Mushroom deadbolt	Cylinder deadbolt			
Stay 1	-	**009-001**	290-510	350	
Stay 2	-	**009-002**	511-760	600	
Stay 2A	-	**009-005**	580-830	670	
Stay 2C	**009-011**	**009-007**	650-830	670	381
Stay 3	**009-008**	**009-003**	821-1000	840	536
Stay 4	**009-009**	**009-004**	951-1200	1040	536
Stay 4A	**009-010**	**009-006**	1201-1450	1290	701

IMPORTANT:
to limit tilting in windows Hw < 600
use anti-wind blockade
Cat. No **032-014**

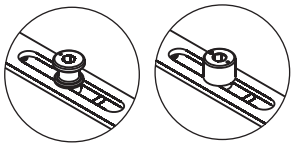

mushroom deadbolt cylinder deadbolt

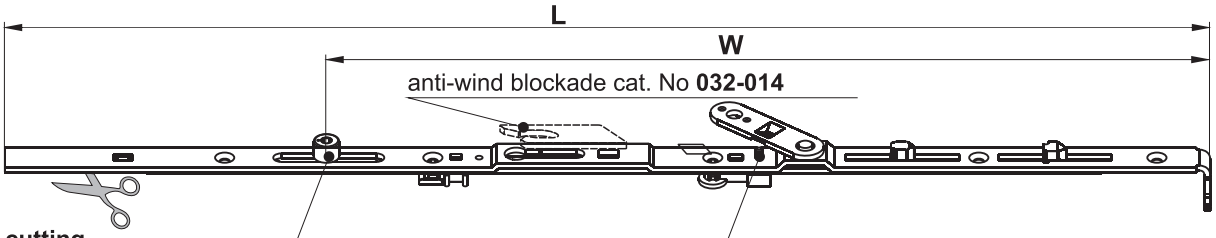

cutting
1 - max. 110 mm;
2, 2A, 4, 4A - max. 250 mm
3, 2C - max. 180 mm

USE:
In sashes of windows **RU** (Dr and Tw) as a subassembly enabling transmitting the drive from the corner to corner drive gear. When combined with stay arm it enables tilting and turning of window sashes. Equipped with blockade eliminating the possibility of forcing the hardware into turned position when the sash is in tilted position. Works with anti-wind blockade that works as a latch by holding the stay arm in tilted position in case of draught or a strong gust of wind

MARKING:
L -total length
W- deadbolt position

PACKING

Subassembly		length [mm]	width [mm]	height [mm]	pcs/ box	box weight [kg]
1	box	380	50	85	10	1,82
	pallet	800	800		2400	
2	box	660	50	85	10	2,95
	pallet	1200	800		1200	
2A	box	800	50	85	10	3,30
	pallet	1200	800		1200	
2C	box	800	50	85	10	3,32
	pallet	1200	800		1200	
3	box	920	50	85	10	4,30
	pallet	1200	800		800	
4	box	1100	50	85	10	5,30
	pallet	1200	800		800	
4A	box	1420	50	85	10	6,55
	pallet	1600	800		800	

Scissors stay

Slit in the window [mm]	*Arm*	*Use*	*Stay catalogue No*
11÷12	P	Drive gear MC; Drive gear NC	**031-004**
	S	Drive gear UC1 to UC4	**031-005**
8÷9	Z	Drive gear UC1 to UC4	**031-006**

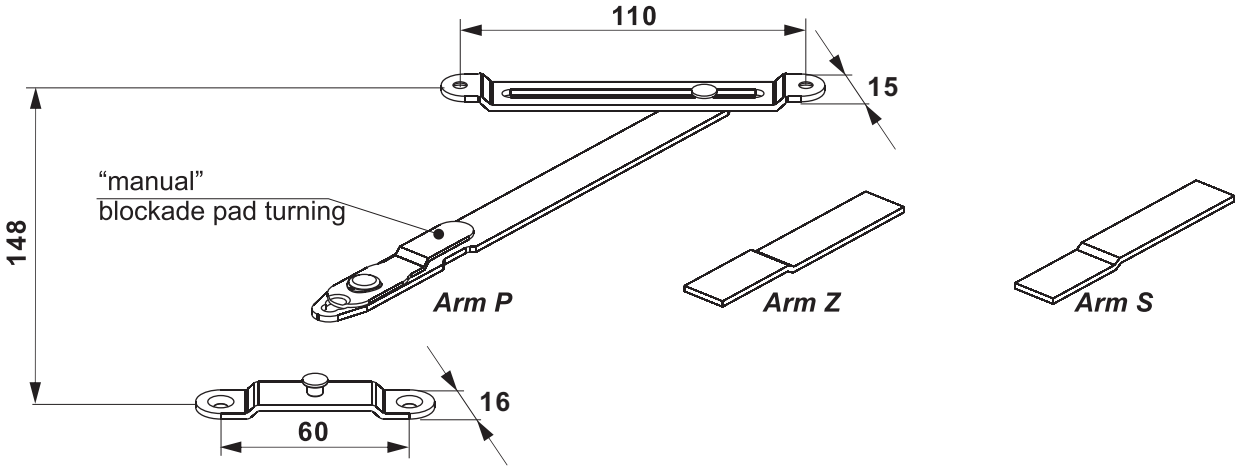

Bracket B

Catalogue No **031-003**

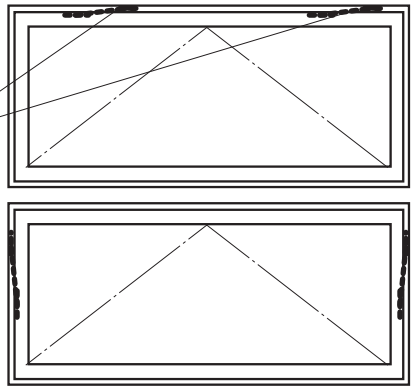

number of stays depends on windows type and size
(see fitting instructions, scissors stay-tilt windows)

USE:
Scissors stay is used in tilt windows as a subassembly limiting sashes tilting. When combined with drive gear MC and NC it works without bracket.
In windows with **TAKT-150** hardware, it is used as an element protecting from disconnecting of window sash.

ORDERING:
Stay catalogue No and bracket catalogue No should be quoted separately.

PACKING

Subassembly		length [mm]	width [mm]	height [mm]	pcs/ box	box weight [kg]
P	box	300	180	180	200	15,75
	pallet	1200	800			
S	box	300	180	180	200	15,75
	pallet	1200	800			
Z	box	300	180	180	200	15,75
	pallet	1200	800			

Scissors stay AI

Slit in the window [mm]	*Arm*	*Use*	*Stay catalogue No*
11÷12	P	with bracket B	**034-013**
	S	Drive gear MC, Drive gear NC	**034-014**

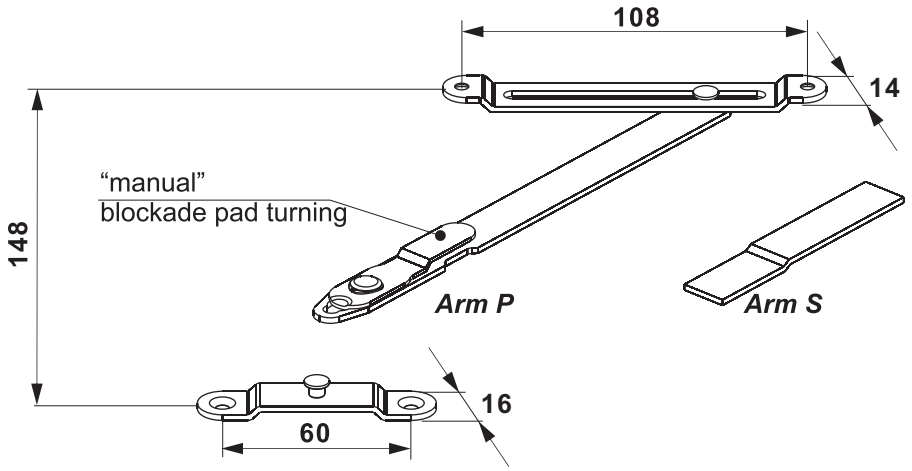

Bracket B

Catalogue No **031-003**

Number of stays depends on windows type and size
(see fitting instructions, scissors stay - tilt windows)

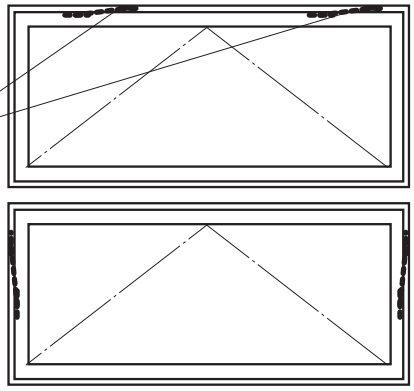

USE:
Scissors stay is used in aluminium tilt windows, mainly in **MB59S** system as a subassembly limiting tilting of sashes. When combined with drive gear MC and NC it works without bracket.
In windows with **TAKT-150** hardware it is used as an element protecting from disconnecting of window sash.

ORDERING:
Stay catalogue No and bracket catalogue No should be quoted separately.

PACKING

Subassembly		length [mm]	width [mm]	height [mm]	pcs/ box	box weight [kg]
P	box	300	180	180	200	15,75
	pallet	1200	800			
S	box	300	180	180	200	15,75
	pallet	1200	800			

CORNER DRIVE GEAR TwO, Tw/Al

Feature	*Catalogue No*
9	**017-003**
13	**017-004**
13/21	**017-005**
14	**017-006**

Corner drive gear leaf Tw/Al

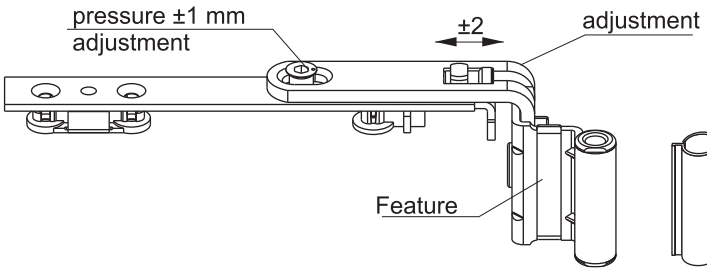

Bearing guard Nr IVA

PACKING

Subassembly		length [mm]	width [mm]	height [mm]	pcs/ box	box weight [kg]
9 TwO	box	300	180	180	50	10,40
	pallet	1200	800			
13TwO, 14TwO	box	300	180	180	50	10,40
	pallet	1200	800			
13/21TwO	box	300	180	180	50	10,60
	pallet	1200	800			

USE:
In sashes of windows **R** (**Tw**).

IMPORTANT:
fit the guard before placing the hinge leaf into upper hinge bracket.
Leaf construction enables flushing the upper hinge bracket with the edge of the sash.

Upper hinge bracket TwO

TwO3 Catalogue No **015-004**

TwO6 Catalogue No **015-005**

Bracket guard Nr IIIB

PACKING

Subassembly		length [mm]	width [mm]	height [mm]	pcs/ box	box weight [kg]
TwO 3	box	300	180	180	300	13,30
	pallet	1200	800			
TwO 6	box	300	180	180	200	10,20
	pallet	1200	800			

USE:
In sashes of windows **R** and **Ru**(**Tw**) works with stay arm **TwO**, or corner hinge leaf **TwO**. Maximum sash weight 100 kg. Bracket construction enables flushing with the edge of the sash.

For **TwO 3** jig cat. No.: **038-009**
For **TwO 6** jig cat. No.: **038-012**

Corner drive gear hinge TwH

Feature	*Catalogue No*
9	**017-007**
13	**017-008**
13/21	**017-009**
14	**017-010**

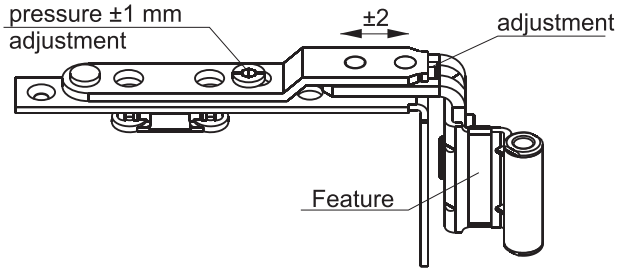

Bearing guard Nr IVA

USE:
In sashes of windows **R** (**Tw**) works with tilt restrictor (**ORC**), or sash break (**HBK**). Maximum sash weight 80 kg.

IMPORTANT:
fit the guard before placing hinge leaf into upper hinge bracket.
Leaf construction enables flushing the upper hinge bracket with the edge of the sash.

PACKING

Subassembly		length [mm]	width [mm]	height [mm]	pcs/ box	box weight [kg]
9 TwH	box	300	180	180	50	9,60
	pallet	1200	800			
13TwH	box	300	180	180	50	9,60
	pallet	1200	800			
13/21TwH	box	300	180	180	50	9,80
	pallet	1200	800			

Upper hinge bracket TwO

TwO3 Catalogue No **015-004**
TwO6 Catalogue No **015-005**

Bracket guard Nr IIIB

USE:
In sashes of windows **R** and **Ru**(**Tw**) works with stay arm **TwO**, or corner hinge leaf **TwH** (**TwO**).
Maximum sash weight 100 kg.

Bracket construction enables flushing with the edge of the sash.

For **TwO 3** jig cat. No.: **038-009**
For **TwO 6** jig cat. No.: **038-012**

PACKING

Subassembly		length [mm]	width [mm]	height [mm]	pcs/ box	box weight [kg]
TwO 3	box	300	180	180	300	13,30
	pallet	1200	800			
TwO 6	box	300	180	180	200	10,20
	pallet	1200	800			

Corner hinge leaf Dr

Feature	*Catalogue No*	*notch clearance [mm]*	*C [mm]*
11	**017-001**	11 lub 12	29

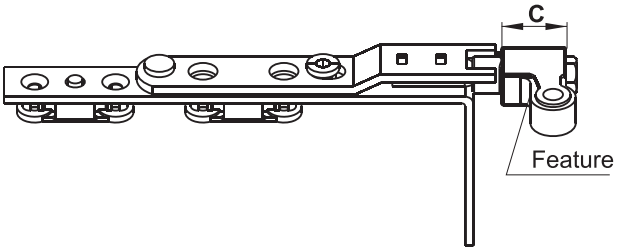

Bearing guard Nr VII

USE:
In sashes of windows **R** (Dr).

IMPORTANT:
fit the guard before placing the leaf into upper hinge bracket.

PACKING

Subassembly		length [mm]	width [mm]	heigth [mm]	pcs/ box	box weight [kg]
Dr	box	300	180	180	50	8,50
	pallet	1200	800			

Upper hinge bracket DrC

Catalogue No **015-002**

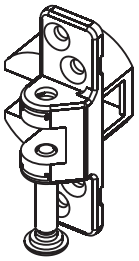

Bracket guard Nr VIII

PACKING

Subassembly		length [mm]	width [mm]	height [mm]	pcs/ box	box weight [kg]
DrC	box	300	180	180	150	11,80
	pallet	1200	800		7200	
DrL	box	300	180	180	300	13,10
	pallet	1200	800		9600	

USE:
In sashes of windows **R** and **RU** (Dr) with maximum sash weight up to 130 kg.

Corner drive gear S5

Catalogue No **017-002**

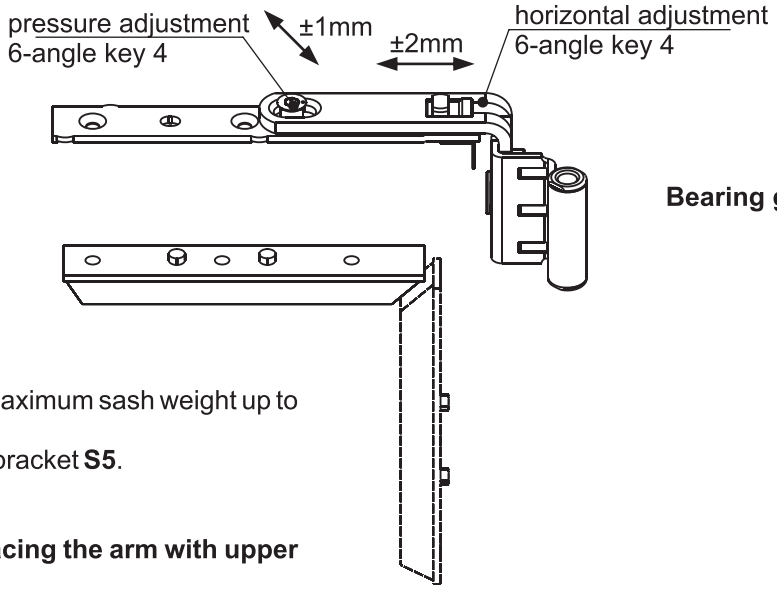

Bearing guard Nr IVA

USE:
In windows **R** (Dr) with maximum sash weight up to 100 kg.
Works with upper hinge bracket **S5**.

IMPORTANT:
fit the guard before placing the arm with upper hinge bracket.

NOTE:
no hardware channel is required!
In case of sashes with hardware channel half a stop block should be used, cat. No **032-004**.

PACKING

Subassembly		length [mm]	width [mm]	height [mm]	pcs/ box	box weight [kg]
corner hinge leaf S5	box	310	185	185	50	6,60
	pallet	1200	800			

Upper hinge bracket S5

Catalogue No **015-003**

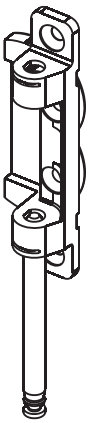

Bracket guard Nr IIIB

USE:
In sashes of windows **R** and **RU** (Dr) with maximum sash weight 100 kg.
Jig cat. No **038-011**

PACKING

Subassembly		length [mm]	width [mm]	height [mm]	pcs/ box	box weight [kg]
upper hinge bracket S5	box	310	185	185	200	12,95
	pallet	1200	800			

Middle hinge leaf S5

Catalogue No **019-009**

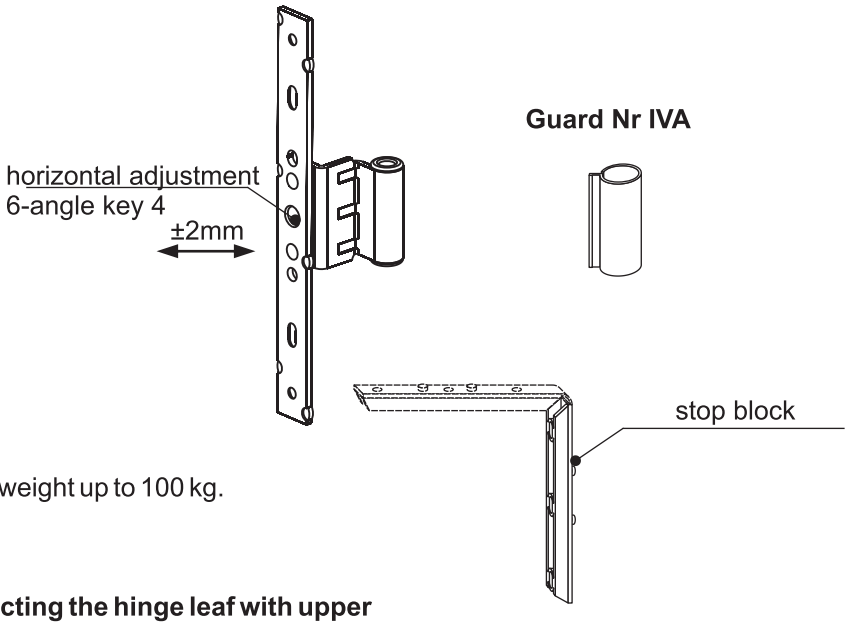

USE:
in windows **R** (Dr) with maximum sash weight up to 100 kg.
Works with upper hinge bracket **S5**.

IMPORTANT:
guard should be fitted before connecting the hinge leaf with upper hinge bracket.
In case of sashes witch hardware channel half a stop block should be used, cat. No **032-004**.

NOTE:
No hardware channel is required!
Hinge leaf can be used in tilt windows.

PACKING

Subassembly		length [mm]	width [mm]	height [mm]	pcs/ box	box weight [kg]
M.h.l. S5	box	300	180	180	100	9,65
	pallet	1200	800			

Upper hinge bracket S5

Catalogue No **015-003**

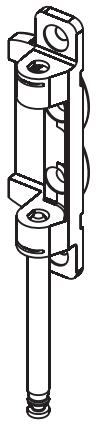

Bracket guard Nr IIIB

USE:
In sashes of windows **R** and **RU** (Dr) with maximum sash weight up to 100 kg.
Jig cat. No **038-011**.

PACKING

Subassembly		length [mm]	width [mm]	height [mm]	pcs/ box	box weight [kg]
U.h.b. S5	box	310	185	185	200	12,95
	pallet	1200	800			

Middle hinge leaf Dr C

(for turn windows)

Variety	*Catalogue No*	*A [mm]*	*Feature*
1 - 1	**1AJ1602UX**	1	11
0 - 2	**1AJ1601UX**	0(2)	11

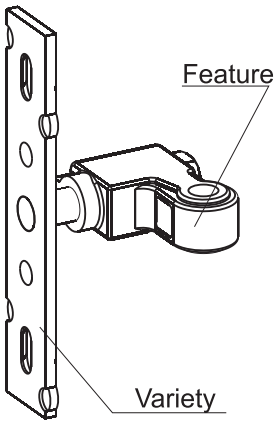

Guard Nr VII

A acc. to the table

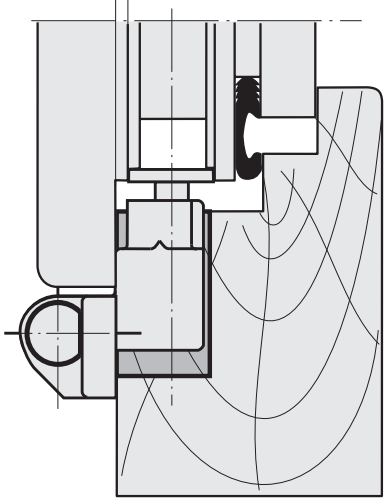

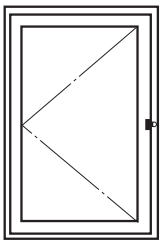

WHILE THE STOCK LASTS !!!

A - displacement dimension obtained by turning the plate towards the bearing. (distance between hardware groove and rebate)

USE:
In sashes of windows **R** (Dr).
For windows weighing up to 130 kg upper hinge bracket **Dr C** should be used, catalogue No **015-002**.
In case of a full hardware channel a stop block should be used, catalogue No **032-003**.
Fix in hardware groove.

IMPORTANT:
guard should be fitted before placing into hinge bracket.

PACKING

Subassembly		length [mm]	width [mm]	height. [mm]	pcs/ box	box weight [kg]
1-1	box	300	180	180	200	13,30
	pallet	1200	800			
0-2	box	300	180	180	200	13,30
	pallet	1200	800			

Lower hinge leaf DrC 11

type	*Catalogue No*	*notch clearance [mm]*
left	**016-003**	11 or 12
right	**016-004**	11 or 12

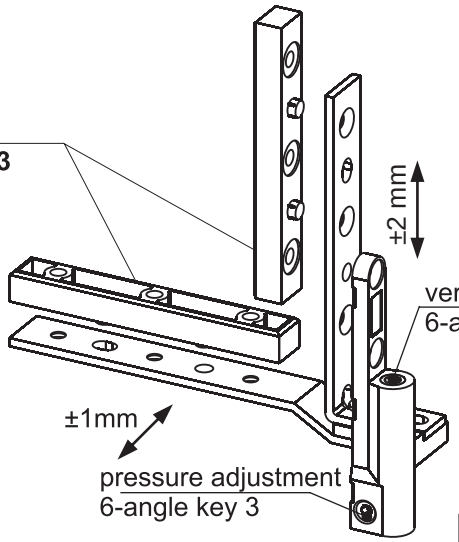

Bracket guard Nr VA
(left or right)

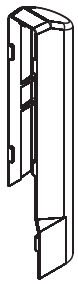

USE:
In sashes of windows **R** and **RU** (**Dr**), with hardware groove. Leaf enables pressure adjustment ±1 mm as well as adjustment in vertical axis ±2 mm.

PACKING

Subassembly		length [mm]	width [mm]	height [mm]	pcs/ box	box weight [kg]
DrC11	box	300	180	180	50	6,00
	pallet	1200	800		3200	

Lower hinge bracket DrC

Type	*Catalogue No*
left	**016-001**
right	**016-002**

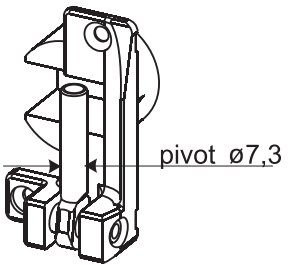

Bracket guard Nr VIB
(left or right)

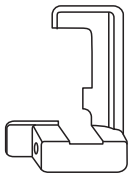

USE:
In sashes of windows **R** and **RU** (**Dr**) weighing up to 130kg.
Works with lower hinge leaf with pressure adjustment.
Jig cat. No **038-008**

PACKING

Subassembly		lenght [mm]	width [mm]	height [mm]	pcs/ box	box weight [kg]
DrC	box	300	180	180	100	10,95
	pallet	1200	800			

Lower hinge leaf S5

Catalogue No **016-005** - Left
Catalogue No **016-006** - Right

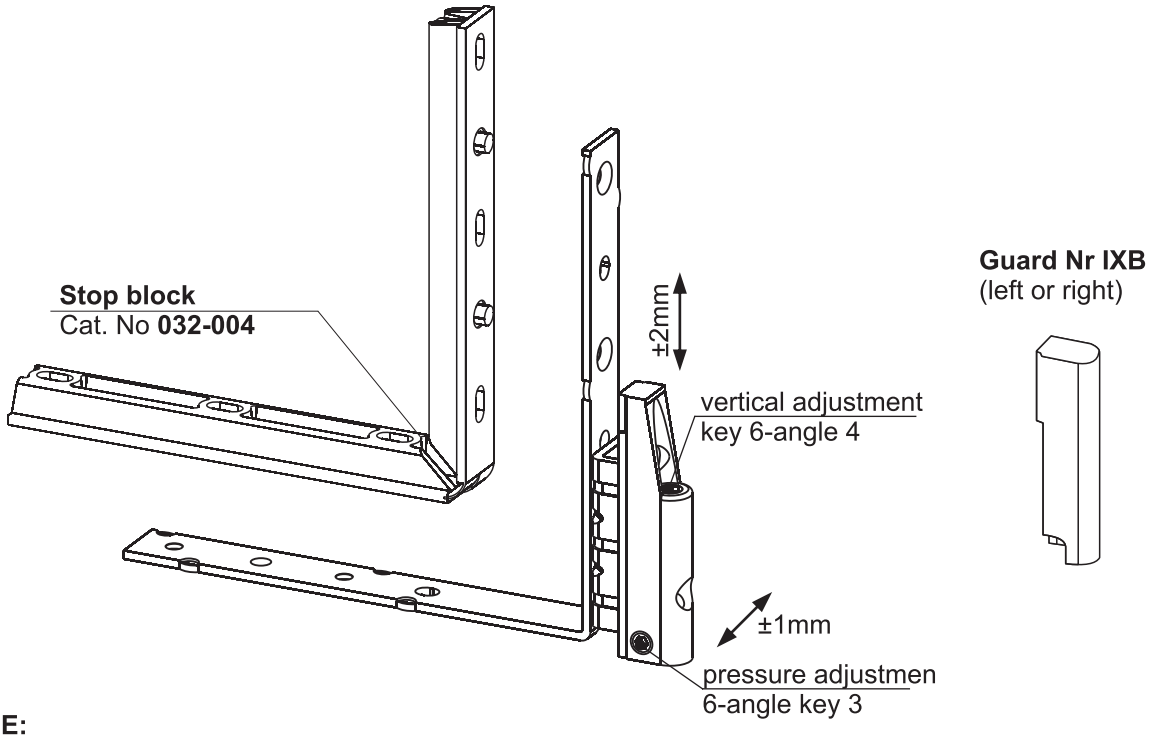

USE:
in windows **R** (Dr) with max. sash weight up to 100 kg.
Works with lower hinge bracket S5.

NOTE: Hardware channel is not required!
In case of sashes with hardware channel a block should be used - cat. No **1AL1502UX**.

PACKING

Subassembly		length [mm]	width [mm]	height [mm]	pcs/ box	box weight [kg]
lower hinge leaf	box	310	185	185	50	8,15
	pallet	1200	800			

Lower hinge bracket S5

Catalogue No **016-011**

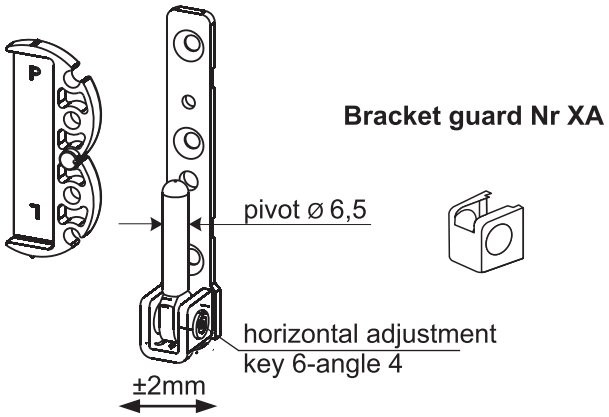

USE:
In windows **R** (Dr) with max. sash weight up to 100 kg.
Works with lower hinge bracket S5.
Jig cat. No **038-011**.

PACKING

Subassembly		length [mm]	width [mm]	height [mm]	pcs/ box	box weight [kg]
l.h.b. S5	box	310	185	185	300	17,10
	pallet	1200	800			

Lower notch hinge leaf

type	*Catalogue No*	*notch clearance [mm]*	*variety*
left right	**016-015** **016-016**	12	9/20
left right	**016-017** **016-018**	12	13/20

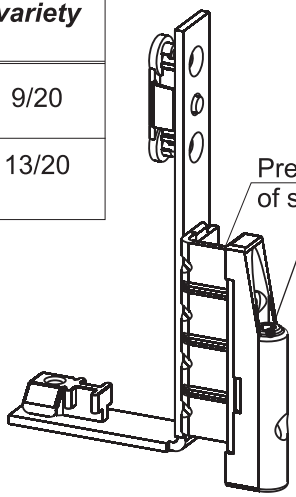

Guard Nr IX
(left or right)

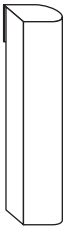

NOTE:
Guard No IXA or AI
(left or right)

NOTE:
to optimise tightness in the corner of the sash it is recommended to cut gasket blade at 60 mm.

USE:
In sashes of windows **R** and **RU** (Tw) with sash weight up to 100 kg.
Recommended in particular for PVC-U systems with atypical, thin sash rebates bent at an angle.

PACKING

Subassembly		length [mm]	width [mm]	height [mm]	pcs/ box	box weight [kg]
9/20	box	300	180	180	50	7,80
	pallet	1200	800			
13/20	box	300	180	180	50	7,80
	pallet	1200	800			

Lower notch hinge bracket

Catalogue No **016-012**

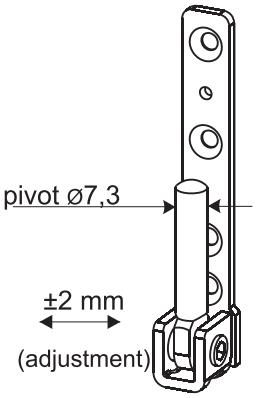

Guard Nr XA

USE:
In sashes of windows **R** and **RU** (**Tw**).
In set with lower notch hinge leaf and lower hinge leaf **TwO** with max sash weight up to 100 kg.
Jig cat. No **032-009**

PACKING

Subassembly		length [mm]	width [mm]	height [mm]	pcs/ box	box weight [kg]
Bracket	box	300	180	180	200	8,40
	pallet	1200	800			

Hinge for tilt windows

Finish/coat	*Catalogue No*	*colour*
varnished	**018-001**	white
varnished	**018-002**	brown
silver	**018-003**	silver
zinc coat	**018-004**	-

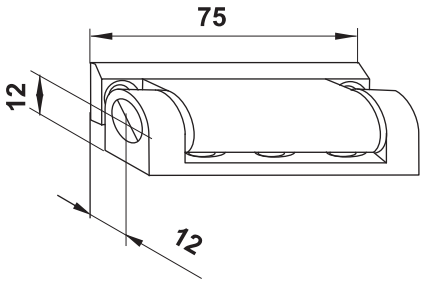

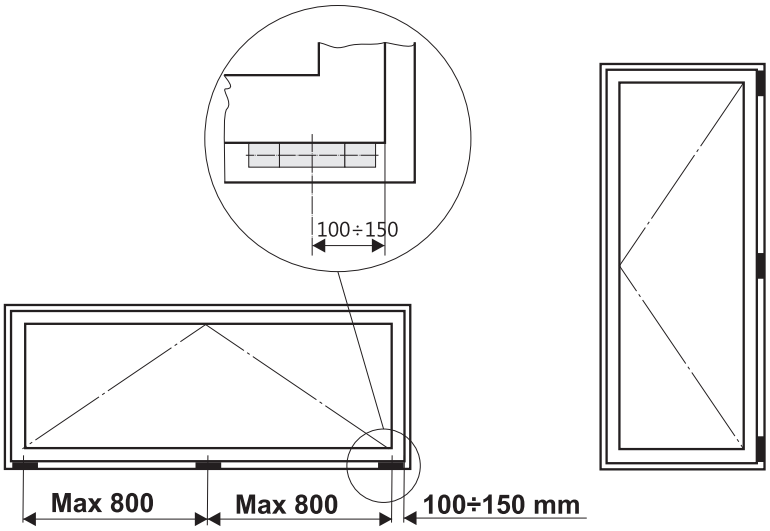

Fitting diagram

USE:
In sashes of windows **U** (**Dr** and **Tw**). Maximum sash weight up to 100 kg. For sashes weighing >60 kg minimum number of hinges 3 pcs.
May be used also for windows **R** (no adjustment).
Maximum space between hinges: 800 mm.

Jig: for windows **Dr/Tw** Cat. No **038-039**.

PACKING

Subassembly		length [mm]	width [mm]	height [mm]	pcs/ box	Box weight [kg]
white	box	300	180	180	250	25,85
	pallet	1200	800			
brown	box	300	180	180	250	25,85
	pallet	1200	800			
zinc coat	box	300	180	180	50	5,80
	pallet	1200	800			

Lower corner hinge leaf S5

cylinder deadbolt

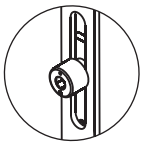

Catalogue No **016-027** - Left
Catalogue No **016-028** - Right

mushroom deadbolt

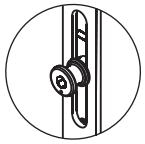

Catalogue No **016-009** - Left
Catalogue No **016-010** - Right

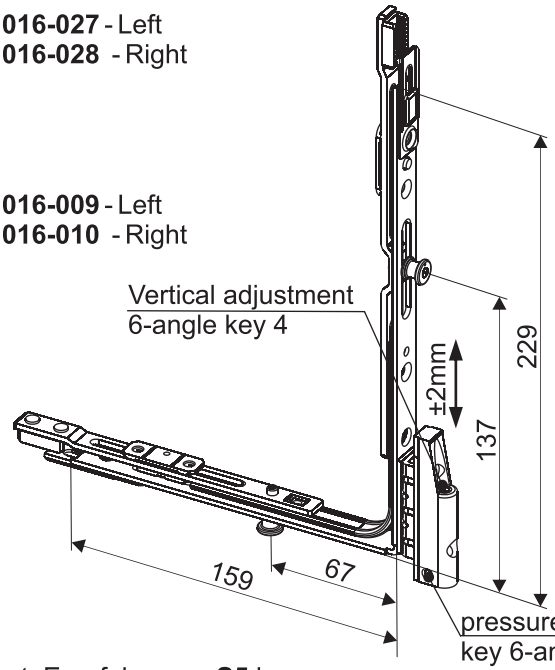

Guard Nr IXB
(left or right)

USE:
In sashes of wooden windows Euronut, Eurofalz as a **S5** lower hinge subassembly. Element transmitting drive from drive gear to rear part of the sash - also in trapezoid and arched windows. Construction of lower hinge leaf increases resistance of hardware **S5** to burglary in **ROMB 3000** system. Works with lower hinge bracket **S5**.

NOTE:
hardware channel is required for proper fitting of the leaf!

PACKING

Subassembly		length [mm]	width [mm]	height [mm]	pcs/ box	box weight [kg]
lower hinge leaf	box	400	290	80	20	6,60
	pallet	1200	800			

Lower hinge bracket S5

Catalogue No **016-011**

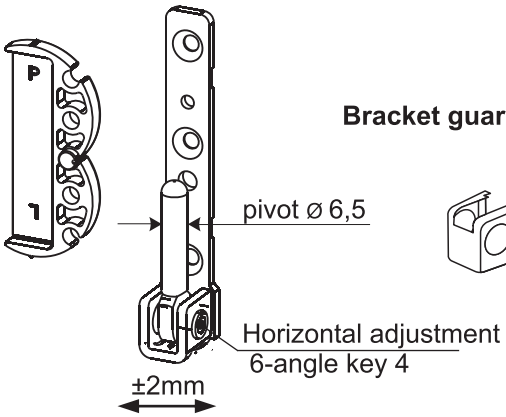

Bracket guard Nr XA

USE:
In windows **R** (Dr) with max. sash weight up to 100 kg.
Works with lower hinge bracket S5.
Jig cat. No **038-011**.

PACKING

Subassembly		length [mm]	width [mm]	height [mm]	pcs/ box	box weight [kg]
l.h.b. S5	box	310	185	185	300	17,10
	pallet	1200	800			

Lower hinge leaf TwO

Catalogue No **016-024** for ø6
Catalogue No **016-023** for ø3

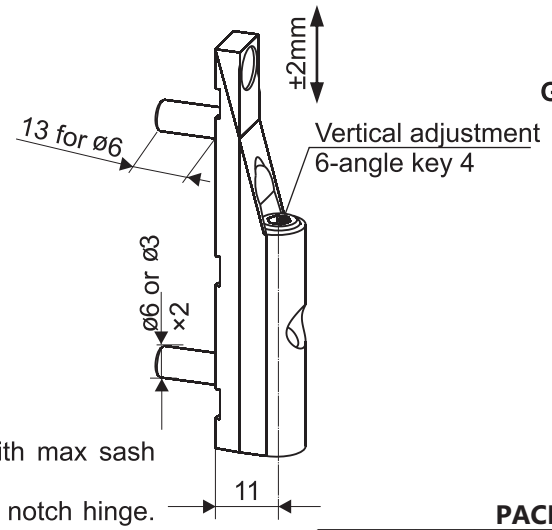

Guard Nr IA

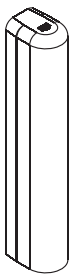

USE:
In sashes of windows **R** and **RU** (**Tw**) with max sash weight up to 100 kg
In set with lower hinge leaf **TwO** or lower notch hinge.
Assures flushing of the hinge with the edge of the sash.
Jig cat. No **038-001** (for ø6)
Jig cat. No **038-005** (for ø3)
Jig cat. No **038-002** (for sash rebate at an angle)

PACKING

Subassembly		length [mm]	width [mm]	height [mm]	pcs/ box	box weight [kg]
Hinge leaf	box	300	180	180	200	8,40
	pallet	1200	800			

Lower hinge bracket TwO

TwO3 Catalogue No **016-025**
TwO6 Catalogue No **016-026**

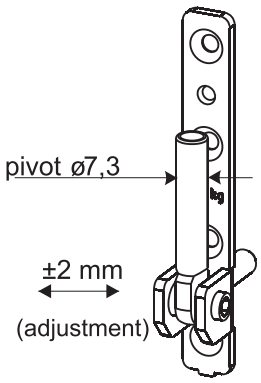

Guard Nr II B

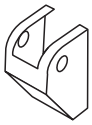

Lower notch hinge bracket

Catalogue No **016-012**

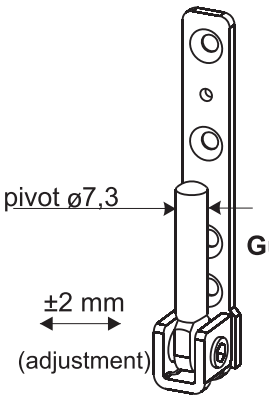

Guard Nr XA

USE:
In sashes of windows **R** and **RU** (Tw). For windows with maximum sash weight up to 80kg use lower hinge bracket TwO.
For windows with maximum sash weight up to 100 kg, or Hw < 650 mm lower notch hinge bracket should be flushed.
Assures flushing of the hinge with edge of the sash.
Lower hinge leaf TwO may be used in windows Dr (light version up to 80 kg).
Jig cat. No **038-009** for TwO3
Jig cat. No **038-012** for TwO6

PACKING

Subassembly		length [mm]	width [mm]	height [mm]	pcs/ box	box weight [kg]
TwO3	box	300	180	180	300	12,65
	paleta	1200	800			
TwO6	box	300	180	180	200	9,20
	paleta	1200	800			
WzdW	box	300	180	180	200	8,40
	paleta	1200	800			

Tilt hinge leaf U Dr C11

Variety	Catalogue No	A [mm]	Feature
1-1	**1AJ1701UX**	1	11
0-2	**1AJ1702UX**	0(2)	11

Guard Nr VII

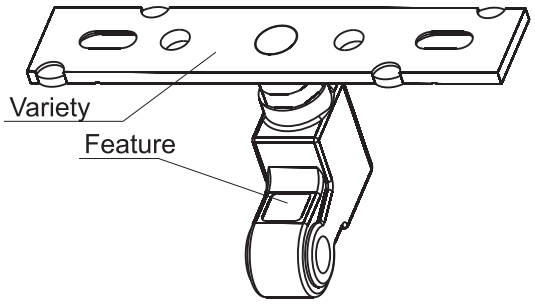

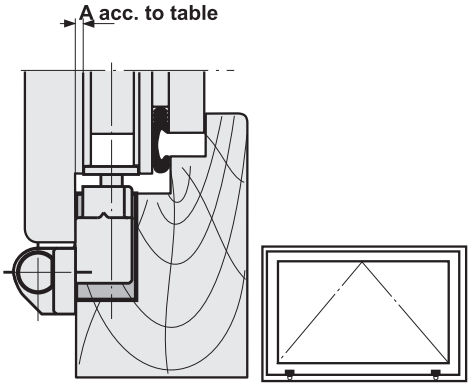

WHILE THE STOCK LASTS !!!

A - displacement extent obtained by turning the plate toward the bearing. (distance between the hardware groove and the rebate)

USE:
In sashes of windows **U** (Dr).
For windows weighing up to 130 kg upper hinge bracket should be used **Dr C,** catalogue No **015-002**
In case of full hardware channel a stop block should be used, catalogue No **032-003**.
Fix in hardware groove.
IMPORTANT:
fit the guard before placing into hinge bracket.

PACKING

Subassembly		length [mm]	width [mm]	height [mm]	pcs/ box	box weight [kg]
DrC11 1-1	box	300	180	180	200	13,35
	pallet	1200	800			
DrC11 0-2	box	300	180	180	200	13,35
	pallet	1200	800			

Tilt hinge leaf R Dr

Catalogue No - **019-010**

Guard Nr VII

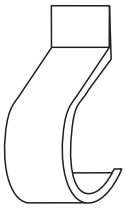

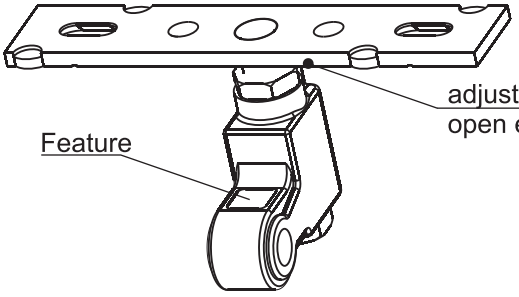

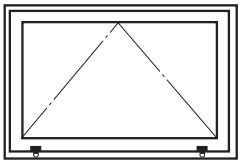

USE:
In sashes of windows **U** (Dr 11/12 mm) without hardware channel in the lower part of the sash.
IMPORTANT:
fit the guard before placing into hinge bracket.

PACKING

Subassembly		lenght [mm]	width [mm]	height [mm]	pcs/ box	box weight [kg]
R-Dr	box	300	180	180	200	13,25
	pallet	1200	800			

Notch tilt hinge leaf TwO

Feature	*Catalogue No*
9/A	**019-001**
13/A	**019-002**
13/21A	**019-003**
14/A	**019-004**

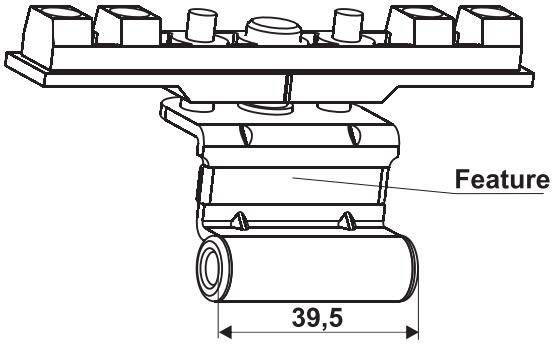

Bearing guard Nr IVA

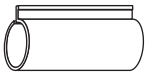

USE:
In sashes of tilt windows **(U) Tw** with notch clearance 12 mm.
Works with upper hinge bracket TwO.
Adjustment in vertical axis within the range ±2 mm is obtained by screwing in and out the bearing (1 turning of the screw = 1 mm).
Socket screw key 6-angle 4 mm.
May be used in sashes of turn windows **(R)** without vertical adjustment.
IMPORTANT:
fit the guard before placing into hinge bracket.

PACKING

Subassembly		length [mm]	width [mm]	height [mm]	pcs/ box	box weight [kg]
9/A	box	300	180	180	100	12,25
	pallet	1200	800			
13/A	box	300	180	180	100	12,25
	pallet	1200	800			
13/21/A	box	300	180	180	100	12,40
	pallet	1200	800			

Notch hinge leaf TwO (trimmed)

Feature	*Catalogue No*
9/B	**019-005**
13/B	**019-006**
13/21B	**019-007**
14/B	**019-008**

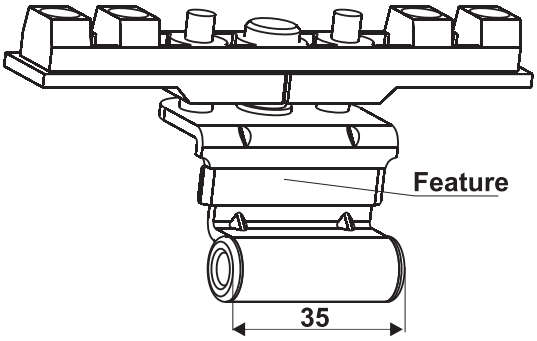

Bearing guard Nr IVA

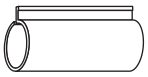

USE:
In sashes of tilt windows **(U) Tw** with notch clearance 12 mm.
Works with upper hinge bracket TwO.
Adjustment in vertical axis within the range ±2 mm is obtained by screwing in and out the bearing (1 turning of the screw = 1 mm). In horizontal axis auto-adujstment ±2 mm.Socket screw key 6-angle 4 mm.
Leaf TwO may be used in sashes of windows turn **(R)** with vertical adjustment
IMPORTANT:
fit the guard before placing into hinge bracket.

PACKING

Subassembly		lengt [mm]	width [mm]	height [mm]	pcs/ box	box weight [kg]
9/B	box	300	180	180	100	11,60
	pallet	1200	800			
13/B	box	300	180	180	100	11,60
	pallet	1200	800			
13/21/B	box	300	180	180	100	11,90
	pallet	1200	800			

Rebate leaf

P-streight Catalogue No **019-011**
K- angular Catalogue No **019-012**

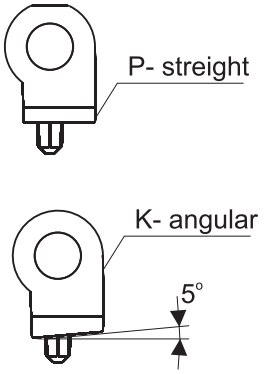

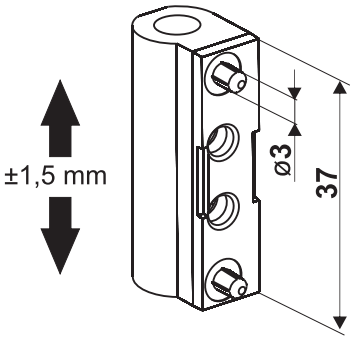

Leaf guard Nr IVB
Catalogue No **033-075**

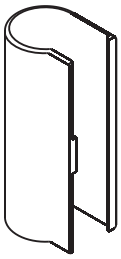

USE:
In sashes of windows **R** and **U** (**Tw**) with max. weight 60 kg.
It has the possibility of displacing toward bracket axis (auto-adjustment) ±1,5 mm
Leaf construction enables flushing the hinge bracket with the edge of the sash.

IMPORTANT:
fit the guard before placing the hinge leaf into upper hinge bracket

Jig cat. No **038-030**

PACKING

Subassembly		length [mm]	width [mm]	height [mm]	pcs/ box	box weight [kg]
Rhl P	box	300	180	180	300	6,90
	pallet	1200	800			
Rhl K	box	300	180	180	200	7.10
	pallet	1200	800			

Upper hinge bracket TwO

TwO3 Catalogue No **015-004**

TwO6 Catalogue No **015-005**

Bracket guard Nr IIIB

USE:
In sashes of windows **R** and **Ru**(**Tw**) works with stay arm **TwO** or corner hinge leaf **TwO** and rebate hinge leaf. Maximum sash weight is 100 kg.
Bracket construction enables flushing with sash edge.

For **TwO 3** jig cat. No: **038-009**
For**TwO 6** jig cat. No: **038-012**

PACKING

Subassembly		lenght [mm]	width [mm]	height [mm]	pcs/ box	box weight [kg]
TwO 3	box	300	180	180	300	13,30
	pallet	1200	800			
TwO 6	box	300	180	180	200	10,20
	pallet	1200	800			

Deadbolt hinge with screws

Item	*Subassembly*	*Catalogue No*	*Type*	*Finish coat*
1	Bearing leaf	**7AT0105UX**	87.05	silver / zinc coat
		7AT01052UX		yellow / zinc coat
2	Deadbolt leaf	**7AS0104UX**	87.05	silver / zinc coat
		7AS01042UX		yellow / zinc coat

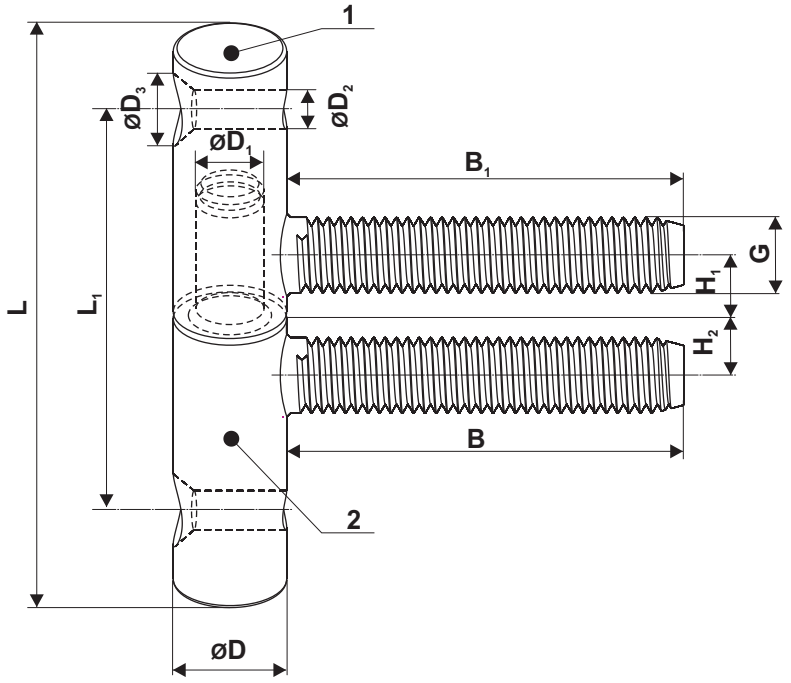

Typ	øD	$øD_1$	L	L_1	$øD_2$	$øD_3$	H_1	H_2	G	B	B_1
87.05	15	9	80	60	5,5	10,5	9	9	M10	54	54

ON SPECIAL ORDER !!!

USE:
recommended mainly for using in wooden turn windows (Dr) and internal doors.

PACKING

Subassembly		lenght [mm]	width [mm]	height [mm]	pcs/ box	box weight [kg]
BI	box	300	180	180	200	7,50
	pallet	1200	800			
DI	box	300	180	180	200	9,40
	pallet	1200	800			

Deadbolt hinge with screws

Item	*Subassembly*	*Catalogue No*	*Type*	*Finish coat*
1	Bearing leaf	**7AT0107UX**	87.24	silver / zinc coat
		7AT01072UX		yellow / zinc coat
2	Deadbolt leaf	**7AS0106UX**	87.24	silver / zinc coat
		7AS01062UX		yellow / zinc coat

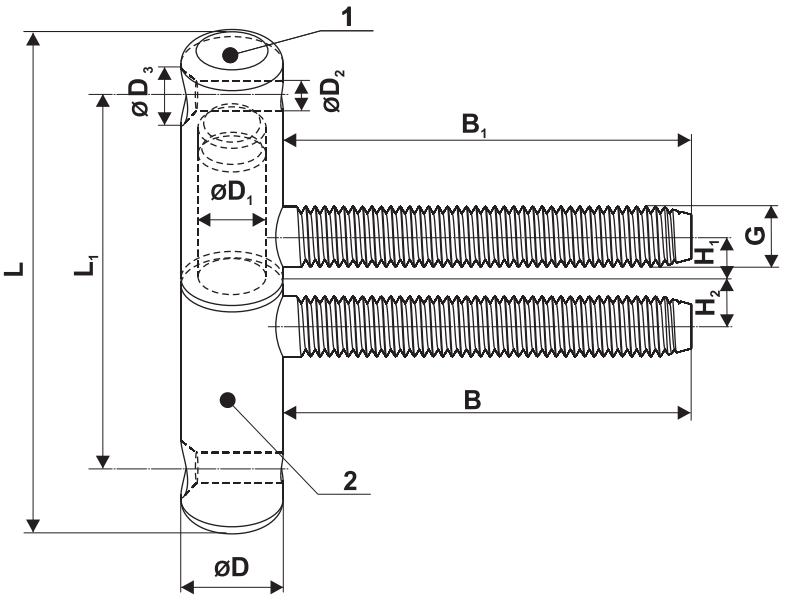

Typ	øD	$øD_1$	L	L_1	$øD_2$	$øD_3$	H_1	H_2	G	B	B_1
87.24	13,5	9	72	58	4	8,4	7	7	M8	54	54

ON SPECIAL ORDER !!!

USE:
recommended mainly for using in wooden turn windows (Dr) and internal doors.

PACKING

Subassembly		lenght [mm]	width [mm]	height [mm]	pcs/ box	box weight [kg]
BI	box	300	180	180	200	9,80
	pallet	1200	800			
DI	box	300	180	180	200	14,00
	pallet	1200	800			

Screwable deadbolt hinge

Item	*Subassembly*	*Catalogue No*	*Type*	*Finish coat*
1	Bearing leaf	**7AT0106UX**	87.23	silver / zinc coat
		7AT01062UX		yellow / zinc coat
2	Deadbolt leaf	**7AS0105UX**	87.23	silver / zinc coat
		7AS01052UX		yellow / zinc coat

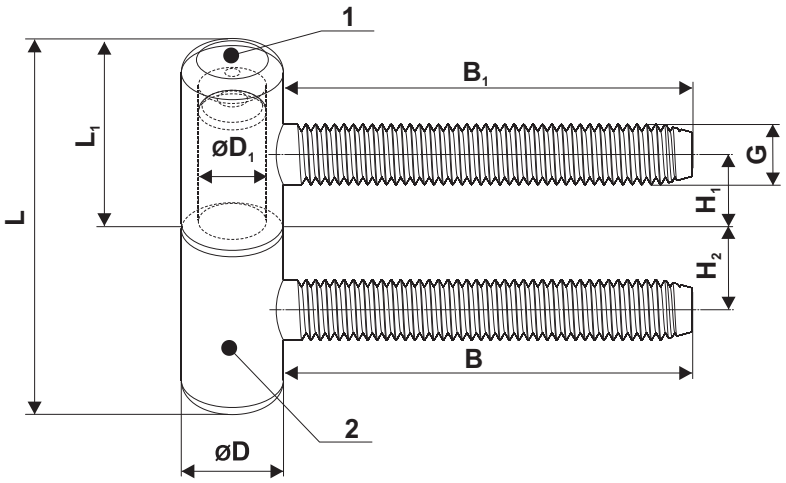

Type	øD	$øD_1$	L	L_1	H_1	H_2	G	B	B_1
87.23	13,5	9	52	26	13	13	M8	54	54

ON SPECIAL ORDER !!!

USE:
Recommended mainly for using in timber turn windows (Dr) and internal doors.

PACKING

Subassembly		length [mm]	width [mm]	height [mm]	pcs/ box	box weight [kg]
S.ł.	box	300	180	180	200	7,80
	pallet	1200	800			
S.cz.	box	300	180	180	200	12,00
	pallet	1200	800			

Deadbolt hinge with a screw

Item	*Subassembly*	*Catalogue No*	*Type*	*Finish coat*
1	Bearing leaf	**7AT0106UX**	87.23	silver / zinc coat
		7AT01062UX		yellow / zinc coat
2	Deadbolt leaf	**7AS0106UX**	87.24	silver / zinc coat
		7AS01062UX		yellow / zinc coat

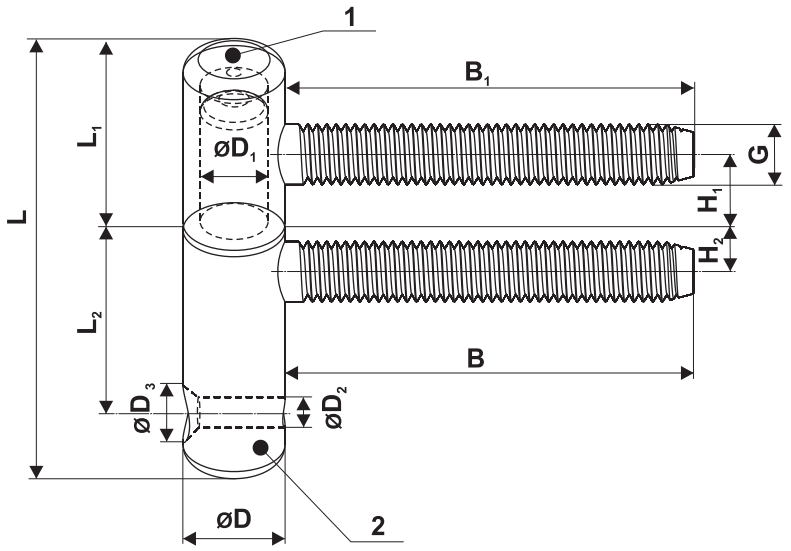

Type	øD	$øD_1$	L	L_1	L_2	$øD_2$	$øD_3$	H_1	H_2	G	B	B_1
87.24	13,5	9	62	26	29	4	8,4	13	7	M8	54	54

ON SPECIAL ORDER !!!

USE:
Recommended mainly for using in wooden turn windows (Dr) and internal doors.

PACKING

Subassembly		length [mm]	width [mm]	height [mm]	pcs/ box	box weight [kg]
B.I	box	300	180	180	200	7,80
	pallet	1200	800			14,00
D.I.	box	300	180	180	200	
	pallet	1200	800			

Striker plates Dr

Item	*Profile system*	*Lower striker plate catalogue No*	*Peripheral striker plate catalogue No*
1	**Dr 7×8** (Euronut)	left 026-008 right 026-009 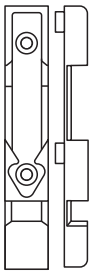	left/right 027-011
2	**Dr** (Eurofalz)	left/right 026-011 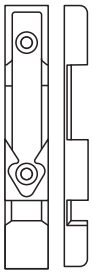	left/right 027-008

TABLE FOR THE SELECTION OF STRIKER PLATES DEPENDING ON THE PROFILE Dr

Profile	*Peripheral striker plate*	*Lower striker plate*	*Microventilation striker plate R*	*Adjustable striker plate B*	*Lift striker plate*	*Striker plate H*
Eurofalz 12/18	027-008	026-011	021-001 L 021-002 R	020-005	022-019	023-015
Euronut 7x8	027-011	026-008 L 026-009 R	021-001 L 021-002 R + podkł. 032-008	020-004	022-018	023-014
Eurofalz 12/20	027-016	026-021	021-007		022-021	

Profile	*Peripheral striker plate U*	*Lower striker plate UD*	*Lower striker plate PWD*
Eurofalz 12/18	024-011 L 024-012 R	025-023 L 025-024 R	028-033 L 028-034 R
Euronut 7x8	024-013 L 024-014 R	025-025 L 025-026 R	028-031 L 028-032 R

PACKING

Subassembly		length [mm]	width [mm]	height [mm]	pcs/ box	box weight [kg]
Eurofalz12/18	box	300	180	180	300	11,00
lower	pallet	1200	800			
Eurofalz12/18	box	300	180	180	1000	19,85
peripheral	pallet	1200	800			
Euronut 7x8	box	300	180	180	300	11,00
lower	pallet	1200	800			
Euronut 7x8	box	300	180	180	1000	19,85
peripheral	pallet	1200	800			
Eurofalz12/20	box	300	180	180	300	12,01
lower	pallet	1200	800			
Eurofalz12/20	box	300	180	180	1000	19,23
peripheral	pallet	1200	800			

STRIKER PLATES
TABLE FOR SELECTION OF STRIKER PLATES Tw 13

Profile	Peripheral striker plate	Lower striker plate		Microventilation striker plate R	Adjustable striker plate B13	Lift striker plate with blockade	Striker plate RS
Aluplast IDEAL 2000, Avantgarde	027-002	026-002 026-003	L R	021-014	020-013	022-002	021-029
Aluplast 4000	027-002	026-002 026-003	L R	021-016	020-011	022-003	021-037
AURA 6402	027-009	026-015 026-016	L R	021-022	020-014	022-007	021-036
Brügmann AD/MD	027-002	026-002 026-003	L R	021-014	020-014	022-013	021-036
Deceuninck Mondial 2000	027-014	026-006 026-007	L R	021-018	020-009	022-016	021-033
Deceuninck Zendow	027-004	026-006 026-007	L R	021-019	020-023	022-010	021-034
Decco 60	027-009	026-015 026-016	L R	021-013	020-020	022-013	021-028
Decco 70	027-009	026-015 026-016	L R	021-009	020-015	022-015	021-024
Decco 70 (PL)	027-020	026-025 026-026	L R	021-008	020-018	022-012	021-023

Profile	Peripheral striker plate U	Lower striker plate UD		Peripheral striker plate PW	Lower striker plate PWD		Striker plate H	
Aluplast IDEAL 2000, Avantgarde	024-004	025-007 025-008	L R	029-002	028-003 028-004	L R	023-003	
Aluplast 4000	024-001	025-001 025-002	L R	029-005	028-009 028-010	L R	023-002	
AURA 6402	024-007	025-011 025-012	L R	029-002	028-003 028-004	L R	023-003	
Brügmann AD/MD	024-007	025-011 025-012	L R	029-012	028-003 028-004	L R	023-003	
Deceuninck Mondial 2000	024-005	025-019 025-020	L R	029-007	028-013 028-014	L R	023-004	
Deceuninck Zendow	024-009	025-021 025-022	L R	029-010	028-021 028-022	L R	023-011	
Decco 60	024-003	025-005 025-006	L R	029-004	028-007 028-008	L R	023-010	
Decco 70	024-003	025-005 025-006	L R	029-009	028-017 028-018	L R	023-004	
Decco 70 (PL)		026-015 026-016	L R	029-008	028-015 028-016	L R	023-008	

L- left R -right

PACKING: box lenght/width/height - 300/180/180 [mm]

Lower striker plate	pcs/ box	box weight [kg]
026-002 026-003	300	11,40
026-004 026-005	300	10,80
026-006 026-007	300	11,50

Lower striker plate	pcs/ box	box weight [kg]
026-015 026-016	300	10,56
026-017 026-018	300	10,50

Peripheral striker plate	pcs/ box	box weight [kg]
027-002	300	11,40
027-003	1000	15,85
027-004	300	11,10
027-009	1000	15,60
027-010	1000	15,40
027-014	1000	16,30

STRIKER PLATES
TABLE FOR SELECTION OF STRIKER PLATES Tw 13

Profile	Peripheral striker plate	Lower striker plate		Microventilation striker plate R	Adjustable striker plate B13	Lift striker plate with blockade	Striker plate RS
Dimex MD	027-002	026-002 026-003	L R	021-016	020-012	022-003	021-031
Foris 3K, 5K	027-009	026-015 026-016	L R	021-014	020-016	022-008	031-029
Gealan 3000	027-003	026-004 026-005	L R	021-008	020-018	022-012	021-023
Gealan 3000 (increased pressure)	027-018	026-022 026-023	L R				
KBE 70	027-009	026-015 026-016	L R	021-013	020-020	022-009	021-028
Kömmerling Eurodur	027-012	026-019 026-020	L R	021-021	020-019	022-005	021-037
Kömmerling Futura	027-003	026-004 026-005	L R	021-008	020-018	022-005	021-037
LB STYL 2000	027-002	026-002 026-003	L R	021-022	020-014	022-013	021-036
Plustec	027-002	026-002 026-003	L R	021-022	020-022	022-008	021-036

L- left R -right

Profile	Peripheral striker plate U	Lower striker plate UD		Peripheral striker plate PW	Lower striker plate PWD		Striker plate H	
Dimex MD	024-004	025-007 025-008	L R	029-005	028-009 028-010	L R	023-002	
Foris 3K, 5K	024-015	025-015 025-016	L R	029-002	028-003 028-004	L R	023-006	
Gealan 3000	024-002	025-003 025-004	L R	029-008	028-015 028-016	L R	023-008	
KBE 70	024-003	025-005 025-006	L R	029-004	028-007 028-008	L R	023-010	
Kömmerling Eurodur	024-006	025-009 025-010	L R	029-008	028-015 028-016	L R	023-009	
Kömmerling Futura	024-002	025-003 025-004	L R	029-008	028-015 028-016	L R	023-009	
LB STYL 2000	024-007	025-011 025-012	L R	029-002	028-003 028-004	L R	023-003	
Plustec	024-003	025-005 025-006	L R	029-002	028-003 028-004	L R	023-003	

L- left R -right

PACKING: box length/width/height - 300/180/180 [mm]

Lower striker plate	pcs/ box	box weight [kg]
026-002 026-003	300	11,40
026-004 026-005	300	10,80
026-006 026-007	300	11,50

Lower striker plate	pcs/ box	box weight [kg]
026-015 026-016	300	10,56
026-017 026-018	300	10,50

Peripheral striker plate	pcs/ box	box weight [kg]
027-002	300	11,40
027-003	1000	15,85
027-004	300	11,10
027-009	1000	15,60
027-010	1000	15,40
027-014	1000	16,30

Peripheral striker plate	pcs/ box	box weight [kg]
027-018	1000	15,80

STRIKER PLATES
TABLE FOR SELECTION OF STRIKER PLATES Tw 13

Profile	Peripheral striker plate	Lower striker plate		Microventilation striker plate R	Adjustable striker plate B13	Lift striker plate with blockade	Striker plate RS
Rehau Brillant Rehau Basic Rehau Termo	027-002	026-002 026-003	L R	021-015	020-008	022-001	021-030
Roplasto 7001 Roplasto 6002	027-002	026-002 026-003	L R	021-012	020-021	022-006	021-027
Roplasto 4k.	027-002	026-002 026-003	L R	021-008	020-021	022-006	021-023
Royal Gold	027-002	026-002 026-003	L R	021-022	020-014	022-001	021-036
Royal Silver Line	027-013	026-014		021-011	020-005 + podkł. 032-009	022-017	021-026
Ryven	027-002	026-002 026-003	L R	021-022	020-008	022-001	021-036
Salamander 3D Salamander 2D	027-002	026-002 026-003	L R	021-017	020-012	022-004	021-032
Viva-Plast	027-002	026-002 026-003	L R	021-014	020-013	022-002	021-029

L- left R -right

Profile	Peripheral striker plate U	Lower striker plate UD		Peripheral striker plate PW	Lower striker plate PWD		Striker plate H	
Rehau Brillant Rehau Basic Rehau Termo	024-001	025-001 025-002	L R	029-001	028-001 028-002	L R	023-001	
Roplasto 7001 Roplasto 6002				029-004	028-007 028-008	L R	023-010	
Roplasto 4k.				029-004	028-007 028-008	L R	023-010	
Royal Gold	024-001	025-001 025-002	L R	029-001	028-001 028-002	L R	023-003	
Royal Silver Line	024-006	025-009 025-010	L R				023-015 + podkł. 032-009	
Salamander 3D Salamander 2D	024-010	025-017 025-018	L R	029-006	028-011 028-012	L R	023-002	
Viva-Plast	024-004	025-007 025-008	L R	029-001	028-029 028-030	L R	023-006	

PACKING: box length/width/height - 300/180/180 [mm]

Lower striker plate	pcs/ box	box weight [kg]
026-002 026-003	300	11,40
026-004 026-005	300	10,80
026-006 026-007	300	11,50

Lower striker plate	pcs/ box	box weight [kg]
026-015 026-016	300	10,56
026-017 026-018	300	10,50

Peripheral striker plate	pcs/ box	box weight [kg]
027-002	300	11,40
027-003	1000	15,85
027-004	300	11,10
027-009	1000	15,60
027-010	1000	15,40
027-014	1000	16,30

STRIKER PLATES
TABLE FOR SELECTION OF STRIKER PLATES Tw 13

Profile	Peripheral striker plate	Lower striker plate		Microventilation striker plate R	Adjustable striker plate B13	Lift striker plate with blockade	Striker plate RS
Schüco AS 60	027-010	026-017 026-018	L R	021-016	020-011	022-003	021-031
Schüco CT 70 Schüco SI 82	027-010	026-017 026-018	L R	021-014	020-014	022-002	021-029
Spectus 4 i 5 komorowy	027-002	026-002 026-003	L R	021-022	020-008	022-001	021-036
Thyssen Deceuninck inoutic	027-013	026-014	L R	021-011	020-005 + pad 032-009	022-017	021-026
Trocal confort (ościeżn. 11.01.00)	027-004	026-006 026-007	L R	021-020	020-010	022-014	021-035
Veka Topline Veka Perfectline	027-002	026-002 026-003	L R	021-022	020-014	022-013	021-036
Wymar 2500	027-003	026-004 026-005	L R	021-010	020-017	022-011	021-025
Wymar 3000	027-003	026-004 026-005	L R				

L- left R -right

Profile	Peripheral striker plate U	Lower striker plate UD		Peripheral striker plate PW	Lower striker plate PWD		Striker plate H	
Schüco AS 60	024-008	025-013 025-014	L R	029-005	028-009 028-010	L R	023-009	
Schüco CT 70 Schüco SI 82	024-004	025-007 025-008	L R	029-002	028-003 028-004	L R	023-003	
Spectus 4- and 5-chamber				029-004	028-007 028-008	L R	023-003	
Thyssen Deceuninck inoutic	024-006	025-009 025-010	L R				023-015 + pad 032-009	
Trocal confort (frame 11.01.00)	024-017	025-029 025-030	L R	029-011	028-023 028-024	L R	023-005	
Veka Topline Veka Perfectline	024-007	025-011 025-012	L R	029-002	028-003 028-004	L R	023-005	
Wymar 2500	024-015	025-015 025-016	L R	029-003	028-005 028-006	L R	023-001	
Wymar 3000	024-015	025-015 025-016	L R		028-037 028-038	L R		

L- left R -right

PACKING: box length/width/height - 300/180/180 [mm]

Lower striker plate	pcs/ box	box weight [kg]
026-002 026-003	300	11,40
026-004 026-005	300	10,80
026-006 026-007	300	11,50

Lower striker plate	pcs/ box	box weight [kg]
026-015 026-016	300	10,56
026-017 026-018	300	10,50

Peripheral striker plate	pcs/ box	box weight [kg]
027-002	300	11,40
027-003	1000	15,85
027-004	300	11,10
027-009	1000	15,60
027-010	1000	15,40
027-014	1000	16,30

TABLE FOR SELECTION OF STRIKER PLATES - Tw 9

Profile	*Peripheral striker plate*	*Lower striker plate*		*Microventilation striker plate R*	*Adjustable striker plate B / B9*	*Lift striker plate with blockade*	*striker plate H9*
Veka Softline	027-007	026-012 026-013	L R	021-005	020-001		023-012
KBE uniwersal system	027-007	026-012 026-013	L R	021-004	020-002	022-020	
Plastmo Index	027-007	026-012 026-013	L R	021-004	020-002		
Polaris PA 2000	027-005	026-001		021-003	020-006	034-008	023-013

L- left R -right

PACKING

Lower striker plate	pcs/ box	box weight [kg]
026-001	200	9,05
026-012 026-013	300	10,55

Peripheral striker plate	pcs/ box	box weight [kg]
027-005	1000	18,40
027-007	1000	17,90

box length/width/height - 300/180/180 [mm]

TABLE FOR SELECTION OF STRIKER PLATES - AL

Profile (system)	*Peripheral striker plate*	*Lower striker plate*	*Microventilation striker plate R*	*Adjustable striker plate B / B9*	*Lift striker plate with blockade*
Spectral	027-021	026-001	034-006	034-023	034-008
MB59S	034-010	034-009	034-005	034-004	034-007

Profile (system)	*Peripheral anti-burglary striker plate U*	*Lower anti-burglary striker plate UD*	*Striker plate H9*
Spectral	1AK1301UX	1AK1601LX 1AK1601PX	023-013
MB59S	034-011	034-012	

Striker plate	pcs/ box	box weight [kg]
027-021	1000	17,20
034-010	1000	
026-001	200	9,05
034-009	200	
034-005	500	8,80
034-006	500	6,65
034-004	400	17,80
034-007	500	9,10
034-008	500	9,10
034-011	200	
023-013	200	
034-012	200	10,50

box length/width/height - 300/180/180 [mm]

Striker plate R 13

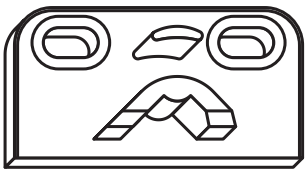

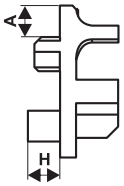

Catalogue No	H [mm]	A [mm]	Profile system
021-020	3	3,9	Trocal Confort 11.01.00; Trocal Innonowa
021-019	4	3,9	Deceuninck Zendow
021-018	6,6	3,9	Deceuninck Mondial 2000
021-017	--	3,9	Salamander 2D/3D
021-016	4,9	3,9	Dimex System MD; Schüco AS, Aluplast 4000
021-015	3,8	3,9	Rehau Basic; Rehau Thermo; Rehau Brillant
021-014	3	3,4	Aluplast Ideal 2000; Schüco CT; Foris; Viva-Plast
021-013	4	3,4	KBE 70, DECCO 4K
021-012	3,8	3,4	Roplasto 7001; Roplasto 6002
021-011	5	3,4	Royal Silver Line; Thyssen
021-010	2,5	3,4	Wymar 2500
021-009	6,7	3,4	DECCO 6K
021-008	4,2	3,4	Gealan 3000; Roplasto 4K
021-021	4,7	3,9	Kömmerling
021-022	3,2	3,9	LB Styl 2000; Veka Topline; Plustec; Brügman AD/MD; Spectus; Aura; Royal Gold

USE:
In sashes of windows **RU** (Tw) where there is a need for unsealing.
Works with corner R.

Striker plate R 9

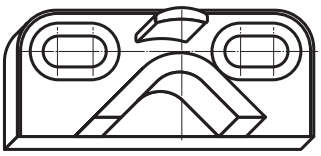

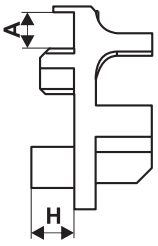

Catalogue No	H [mm]	A [mm]	Profile system
021-006	--	4,5	Greiner 7,5
021-005	2,7	4,5	Veka
021-004	3,7	4	KBE; Plastmo
021-003	3	4	EK 100; Panorama
034-005	4,8	-	MB59S
034-006	3	-	Spectral
021-007	-	-	Eurofalz 12/20

USE:
In sashes of windows **RU** (Tw) where there is a need for unsealing. Works with corner R.

PACKING: box lenght/width/height - 300/180/180 [mm]

Microventilation striker plate R 13	pcs/ box	box weight [kg]
021-020	500	8,75
021-019	500	8,80
021-018	500	8,70
021-017	500	8,80
021-016	500	8,75
021-015	500	8,75
021-014	500	8,75
021-013	500	8,80
021-012	500	8,70
021-011	500	8,80
021-010	500	8,75
021-009	500	8,75
021-008	500	8,75
021-021	500	8,80
021-022	500	8,70

Microventilation striker plate R 9	pcs/ box	box weight [kg]
021-006	500	6,60
021-005	500	6,70
021-004	500	6,65
021-003	500	6,65
034-005	500	10,25
034-006	500	6,65
021-007	500	6,47

Striker plate RS 13

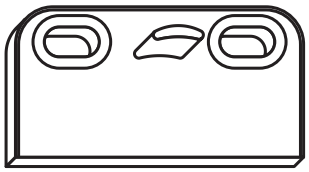

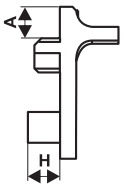

Catalogue No	H [mm]	A [mm]	Profile system
021-023	4,2	3,4	Gealan 3000; Roplasto 4K
021-024	6,7	3,4	DECCO 6K
021-025	2,5	3,4	Wymar 2500
021-026	3,5	3,4	Royal Silver Line; Thyssen
021-027	3,8	3,4	Roplasto 7001; Roplasto 6002
021-028	4	3,4	KBE 70,DECCO 4K
021-029	3	3,4	Aluplast Ideal 2000; Schüco CT; Foris; Viva-Plast
021-030	3,8	3,9	Rehau Basic; Rehau Thermo; Rehau Brillant, Royal Gold
021-031	4,9	3,9	Dimex System MD; Schüco AS, Aluplast 4000
021-032	0	3,9	Salamander 2D/3D
021-033	6,6	3,9	Deceuninck Mondial 2000
021-034	4	3,9	Deceuninck Zendow
021-035	3	3,9	Trocal Confort 11.01.00; Trocal Innonowa
021-036	3,2	3,9	LB Styl 2000; Veka Topline; Plustec; Brügman AD/MD; Spectus; Aura
021-037	4,7	3,9	Kömmerling

PACKING:

Microventilation striker plate R 13	pcs/ box	box weight [kg]
021-023	500	8,75
021-024	500	8,80
021-025	500	8,70
021-026	500	8,80
021-027	500	8,75
021-028	500	8,75
021-029	500	8,75
021-030	500	8,80
021-031	500	8,70
021-032	500	8,80
021-033	500	8,75
021-034	500	8,75
021-035	500	8,75
021-036	500	8,80
021-037	500	8,70

USE:
In sashes of windows **RU** (Tw) where it is necessary to unseal and grade the extension of tilting of the sashes
Works with corner RS,

Cat. No **005-004** left
Cat. No **005-005** right

box length/width/height 300/180/180 [mm]

Striker plate RB

Cat. No **021-038**

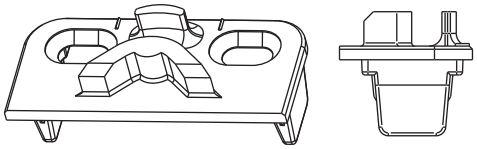

USE:
In windows with movable post as an element enabling microventilation in the sash perpendicular.
Used mainly with movable post with two handles.

Striker plate U (hindering burglary)

Item	Catalogue No / feature	Remarks	Profile system	Dr/Tw	
1	024-011 024-012	L - left R - right	Eurofalz	(Dr)	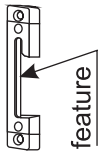 feature
2	024-013 024-014	L - left R - right	Euronut 7×8		
3	024-001	universal (left / right)	Rehau 730, Royal Gold	(Tw) 13	Catalogue No/feature
4	024-003		Plustec,KBE-70,DECCO 60		
5	024-004		Schüco CT, Dimex MD Aluplast Ideal 2000, Viva-Plast		
6	024-002		Gealan		
7	024-006		Thyssen Kömmerling Royal Silver		
8	024-007		Brügmann - MD, LB Styl 2000, Veka Topline		
9	024-008		Schüco AS		
10	024-015		Wymar 2500 Foris		
11	024-010		Salamander 2D/3D		
12	024-005		Deceuninck 2000		
13	024-009		Deceuninck Zendow		
14	024-016		DECCO 70		
15	024-017		Trocal confort		

PACKING

Anti-burglary peripheral striker plate U	pcs/ box	box weight [kg]
024-001	200	14,90
024-002	200	14,80
024-003	200	14,80
024-004	200	14,80
024-006	200	15,00
024-007	200	14,90
024-011	200	10,80
024-012	200	10,80
024-013	200	10,85
024-014	200	10,85
024-008	200	14,35
044-015	200	14,90
024-010	200	14,90
024-005	200	14,90
024-009	200	14,90

USE:
Dr striker plates in wooden windows **R** and **RU** (Euronut
and Eurofalz) in hardware set hindering burglary.
Striker plates Tw in PVC-U windows **R** and **RU** depending on profile system.
Striker plates work with mushroom deadbolts in the sash girth.

box length/width/height 300/180/180 [mm]

Striker plate U-D (hindering burglary)

Item	Catalogue No /feature	Remarks	Profile system	Dr/Tw	
1	025-023 025-024	L - left R - right	Eurofalz	(Dr)	feature
2	025-025 025-026	L - left R - right	Euronut 7×8		
3	025-001 025-002	L - left R - right	Rehau 730 Royal Gold	(Tw) 13	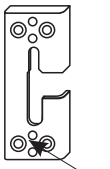 Catalogue No / feature
4	025-005 025-006	L - left R - right	Plustec, KBE-70		
5	025-007 025-008	L - left R - right	Aluplast Ideal 2000 Schüco CT, Dimex MD, Viva-Plast		
6	025-003 025-004	L - left R - right	Gealan		
7	025-009 025-010	L - left R - right	Kömmerling, Thyssen, Royal Silver Line		
8	025-011 025-012	L - left R - right	Brügmann - MD, Aura		
9	025-013 025-014	L - left R - right	Schüco AS LB Styl 2000,Veka Topline		
10	025-015 025-016	L - left R - right	Wymar 2500 Foris		
11	025-019 025-020	L - left R - right	Deceuninck 2000		
12	025-021 025-022	L - left R - right	Deceuninck Zendow		
13	025-017 025-018	L - left R - right	Salamander		
14	025-027 025-028	L - left R - right	DECCO 70		
15	025-029 025-030	L - left R - right	Trocal comfort		

USE:
Striker plates U-D/Dr in wooden windows **R** and **RU** (Euronut and Eurofalz) in hardware set with enhanced resistance to burglary (ROMB 3000).
Striker plates U-D/Tw9, U-D/Tw13 in PVC-U windows **R** and **RU** depending on profile system.
Striker plates work wit mushroom deadbolts of the corner, corner drive gear or fastening corner drive gear in the lower part of the window with tilting function.

PACKING

anti-burglary lower striker plate UD	pcs/ box	box weight [kg]
025-001 025-002	200	12,40
025-007 025-008	200	13,00
025-003 025-004	200	12,60
025-009 025-010	200	13,40
025-011 025-012	200	13,36

anti-burglary lower striker plate UD	pcs/ box	box weight [kg]
025-005 025-006	200	13,26
025-013 025-014	200	13,00
025-015 025-016	200	13,00
025-017 025-018	200	13,00
025-019 025-020	200	13,00
025-021 025-022	200	13,00

anti-burglary lower striker plate UD	pcs/ box	box weight [kg]
025-023 025-024	200	7,76
025-025 025-026	200	10,80

box lenght/width/height 300/180/180 [mm]

Middle striker plate B

Catalogue No **027-022**

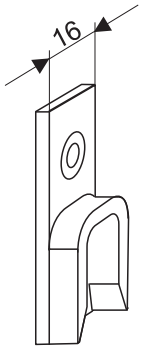

USE:
In sashes of windows **RU** and **R** (Tw) with a so-called movable post in hardware set with locks Tw (upper and lower).
Fitted in hardware groove
Works with locking deadbolts of drive gear M. or Z.

PACKING

Subassembly		length [mm]	width [mm]	height [mm]	pcs/ box	box weight [kg]
Middle striker plate B	box	300	180	180	500	24,70
	pallet	1200	800			

Striker plate R 9

Catalogue No **021-001** left
Catalogue No **021-002** right

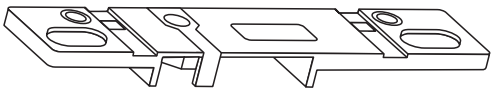

Distance pad for striker plate R 9

Profile type	*Catalogue No*	
Dr 11-7×8	**032-008**	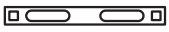
EK100, Panorama, Roplasto System 6190,	**032-005**	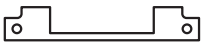
Veka	**032-006**	
KBE Universal System, Plastmo,	**032-007**	

Distance pad for striker plate B/R

Profile type	*Catalogue No*	
Royal, Thyssen	**032-009**	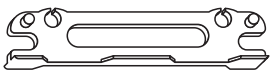

USE:
In sashes of windows **RU** (Tw and Dr) where unsealing is necessary. Works with corner R.

PACKING

Subassembly		length [mm]	width [mm]	height [mm]	pcs/ box	box weight [kg]
striker plate R L and R	box	300	180	180	1000	13,30
	pallet	1200	800			

Adjustable striker plate B13

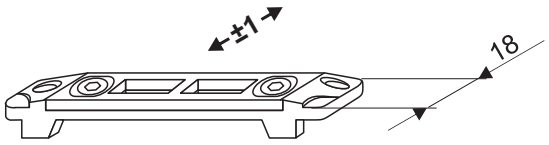

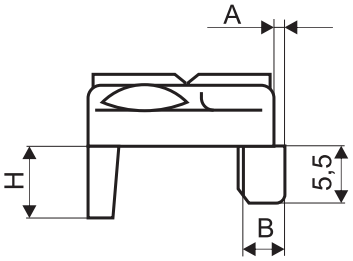

Catalogue No	A [mm]	B [mm]	H [mm]	Profile system
020-008	0	4	4	Rehau 730-Basic, Rehau Brillant, Rehau 730-Termo
020-009	1	4,6	7	Deceuninck 2000
020-010	1	4,6	2,9	Trocal Confort
020-022	1	4	2,8	Plustec
020-021	1	4	4,2	Roplasto 7001, Roplasto 4K
020-020	1,5	4	4,2	KBE 70, DECCO 4K
020-019	1,5	4	4,9	Kömmerling
020-018	1,5	4	4,4	Gealan 3000
020-017	1,5	4	3,2	Wymar 2500
020-016	1,5	4	3,5	Foris
020-015	1	4,6	7,3	Wymar 2000, DECCO 6K
020-014	0	4	2,8	Brügmann AD/MD, Aura 6402, Schüco CT, Styl LB 2000, Veka Topline, Royal Gold
020-013	0	4	3,6	Aluplast 2000, Viva-Plast
020-012	0	4	4,5	Dimex-MD, Salamander 2D/3D
020-011	0	4	4,8	Schüco AS-60,Aluplast 4000
020-023	1	4,6	4	Deceuninck Zendow

USE:
In windows **R** and **RU** (Tw) with a so called movable post in hardware set with locks, drive gear B or BM.
Fitted in upper and lower frame stile
Works with locks Tw, ends, drive gear B and BM.
Possibility of adjustment of rebate holdfast (socket screw key 4mm).

PACKING

Subassembly		length [mm]	width [mm]	height [mm]	pcs/ box	box weight [kg]
020-008	box	300	180	180	400	16,40
	pallet	1200	800		25600	
020-009	box	300	180	180	400	16,40
	pallet	1200	800		25600	
020-010	box	300	180	180	400	16,40
	pallet	1200	800		25600	
020-022	box	300	180	180	400	16,40
	pallet	1200	800		25600	
020-021	box	300	180	180	400	16,40
	pallet	1200	800		25600	
020-020	box	300	180	180	400	16,40
	pallet	1200	800		25600	
020-019	box	300	180	180	400	16,40
	pallet	1200	800		25600	
020-018	box	300	180	180	400	16,40
	pallet	1200	800		25600	

PACKING

Subassembly		length [mm]	width [mm]	height [mm]	pcs/ box	box weight [kg]
020-017	box	300	180	180	400	16,40
	pallet	1200	800		25600	
020-016	box	300	180	180	400	16,40
	pallet	1200	800		25600	
020-015	box	300	180	180	400	16,40
	pallet	1200	800		25600	
020-014	box	300	180	180	400	16,40
	pallet	1200	800		25600	
020-013	box	300	180	180	400	16,40
	pallet	1200	800		25600	
020-012	box	300	180	180	400	16,40
	pallet	1200	800		25600	
020-011	box	300	180	180	400	16,48
	pallet	1200	800		25600	
020-023	box	300	180	180	400	16,40
	pallet	1200	800		25600	

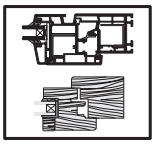

Adjustable striker plate B Euronut 7x8

Cat. No **020-004** for LOCK	Cat. No **014-002** /upper/ Cat. No **014-001** / lower/
Cat. No **020-024** for LOCK	Cat. No **014-006 Dr7/8** /upper/ Cat. No **014-005 Dr7/8** / lower/

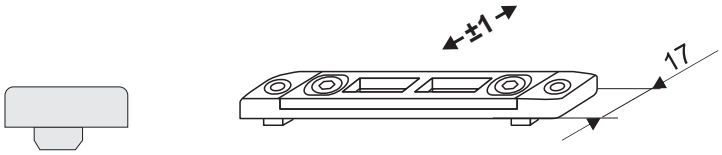

Adjustable striker plate B Eurofalz

Cat. No **020-005** for LOCK	Cat. No **014-002** /upper/ Cat. No **014-001** /lower/
Cat. No **020-007** for LOCK	Cat. No **014-006 Dr7/8** /upper/ Cat. No **014-005 Dr7/8** / lower/

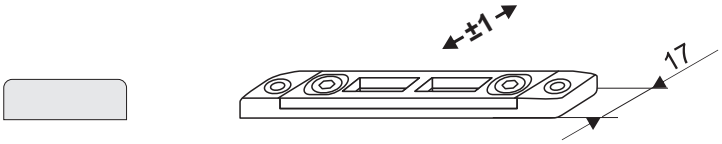

Adjustable striker plate B9

Catalogue No	*H [mm]*	*Profile system*
020-001	2,7	Veka
020-002	3,7	KBE, Plastmo
020-003	-	Greiner 7,5
020-006	3	PANORAMA
034-004	4,8	MB59S
034-023	3	Spectral

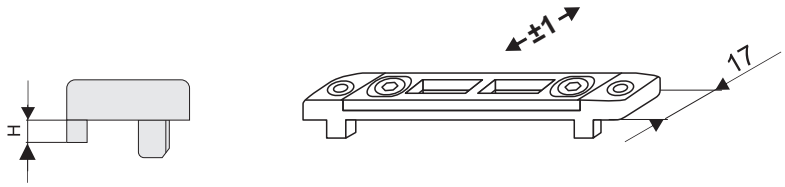

USE:
In windows **R** and **RU** (Tw), **Dr**, **Al** with a so-called movable post in hardware set with locks, drive gear B or BM.
Fitted in upper and lower frame stile.
Works with locks Tw and Dr, ends, drive gear B and BM.
Possibility of adjusting rebate holdfast (socket screw key 4mm).

PACKING

Subassembly		length [mm]	width [mm]	width [mm]	pcs/ box	box weight [kg]
020-001	box	300	180	180	400	17,44
	pallet	1200	800		25600	
020-002	box	300	180	180	400	17,48
	pallet	1200	800		25600	
020-003	box	300	180	180	400	17,28
	pallet	1200	800		25600	
020-006	box	300	180	180	400	17,20
	pallet	1200	800		25600	
020-004	box	300	180	180	400	17,50
020-005	pallet	1200	800		25600	

Striker plate PWD Eurofalz

Catalogue No: **028-033** Left
Catalogue No: **028-034** Right

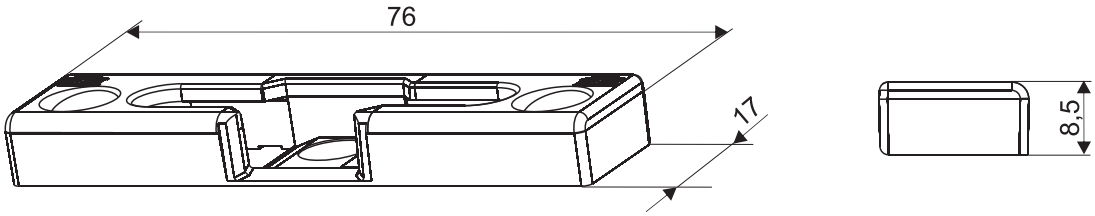

Striker plate PWD Euronut 7x8

Catalogue No: **028-031** Left
Catalogue No: **028-032** Right

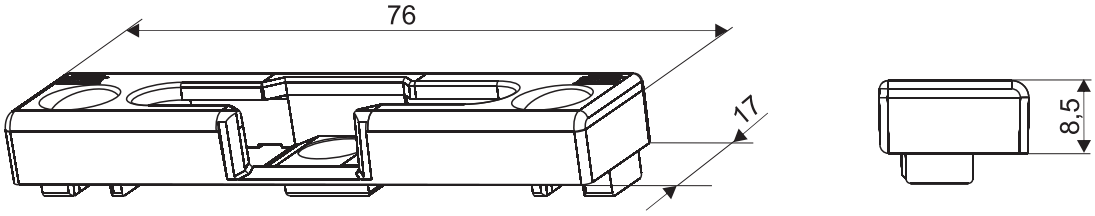

USE:
In wooden turn / tilt windows and balcony doors with notch clearance 12 mm in flat version (eurofalz 18 mm) and striker plate groove 7/8/4 mm (euronut).

Lower unti-unhingement striker plate PWD DR is an element of ROMB 2000 hardware fitted in the frame in the bottom corner of the window, opposite the hinge. It seals the corner of the window in closed position and holds the window in tilted position, hindering its unhinging at the same time. Works with mushroom deadbolts of the corners and corner drive gears.

Offered in right and left variety.

PACKING

Subassembly		length [mm]	width [mm]	height [mm]	pcs/ box	box weight [kg]
All types	box	300	180	180	300	12,00
	pallet	1200	800		19200	780,00

Striker plate PWD 13

Catalogue No		Profile system	A	B	C	D	H	a
028-001 028-002	L R	Rehau, Royal Gold	4,1	3,7	13	5	3,2	4
028-029 028-030	L R	Aluplast 2000, Viva-Plast	4,1	3,9	13	5	2,8	0,5
028-027 028-028	L R	Aluplast 4000	4,1	3,9	14	5	4,7	0,5
028-051 028-052	L R	AURA 6402	3,9	3,5	13	5	3	1,5
028-025 028-026	L R	Brugmann	4,1	3,9	12,5	5	3,4	1,5
028-019 028-020	L R	Deceuninck Inoutic, Thyssen	*	*	*	*	5,5	*
028-013 028-014	L R	Deceuninck mondial	3,6	4,5	12	5	8	*
028-021 028-022	L R	Deceuninck zendow	3,6	4,5	12	5	3,9	1
028-017 028-018	L R	Decco 70	4,1	3,9	13	5	6,7	1
028-049 028-050	L R	Foris	3,7	3,9	13	5	3,3	3
028-015 028-016	L R	Gealan	2,6	3,7	12,5	5	4	2
028-007 028-008	L R	KBE70	3,8	3,7	13	5	3,7	1
028-047 028-048	L R	Kommerling	3,1	3,7	12	5	4	4
028-045 028-046	L R	LB styl 2000, Veka Topline	4,1	3,9	13,5	5	3,1	2
028-003 028-004	L R	Plustec	4,1	3,9	13,5	5	3,1	3
028-039 028-040	L R	Roplasto	4,1	3,7	12	5	4,3	1
028-011 028-012	L R	Salamander	4,2	3,7	18,5	5	4,1	3
028-009 028-010	L R	SCHUCO AS	4,9	3,7	14	5	4,8	0,5
028-041 028-042	L R	SCHUCO CT	4,9	3,7	14	5	3,1	0,5
028-023 028-024	L R	Trocal	4	4,5	15	5	3,4	0,5
028-005 028-006	L R	Wymar 2500	2,8	4,2	12,5	6,5	2,6	4
028-037 028-038	L R	Wymar 3000	2,8	4,2	12,5	6,5	4,8	4
028-035 028-036	L R	Wital	3,8	3,9	13	5	4,7	0,5

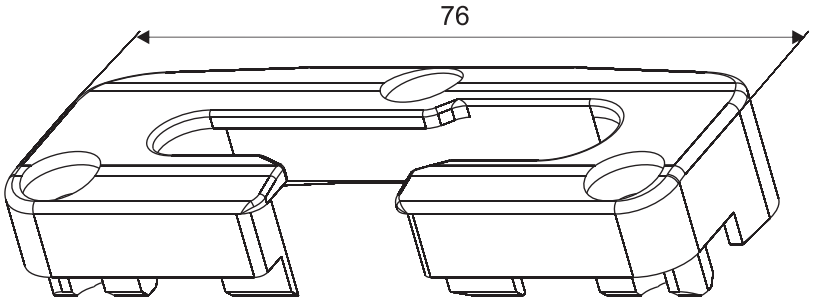

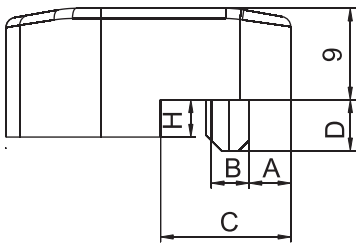

USE:
In turn / tilt windows and balcony doors, made of PVC-U profiles listed in the above table. Lower anti-unhingement striker plate PWD is an element of ROMB 2000 hardware fitted in the frame in the bottom corner of the window opposite the hinge. It seals the corner of the window in the closed position and holds it in tilted position, hindering its unhingement at the same time. Works with mushroom deadbolts of the corners and corner drive gears.
Offered in right and left variety.

PACKING

Subassembly		length [mm]	width [mm]	height [mm]	pcs/ box	box weight [kg]
All types	box	300	180	180	300	18,00
	pallet	1200	800		19200	1180,00

Striker plate PW 13

Catalogue No	*B [mm]*	*H [mm]*	*Profile system*
029-001	3,7	4,2	Rehau 730 -Termo, Rehau Brillant, Rehau 730-Basic, Viva-Plast
029-002	3,7	3,3	Tantroniks, Veka-topline, Aura,LB Styl Schüco CT 70, Foris
029-003	3,7	3,3	Wymar 2500, Royal Gold
029-004	3,7	4,5	Scheffer, SOK, Roplasto 4K, Roplasto 7001, KBE 70, DECCO 60, Spectus TK 70
029-005	3,7	4,8	Dimex-MD, Schüco AS-60, Aluplast 4000
029-006	3,7	4,5	Salamander 2D/3D
029-007	4,6	7	Deceuninck 2000, Wymar 2000
029-008	3,7	4,5	Gealan 3000
029-009	3,7	7	DECCO 70
029-010	4,4	4,2	Deceuninck Zendow
029-011	4,5	3,3	Trocal confort
029-012	3,7	3,3	Brügmann

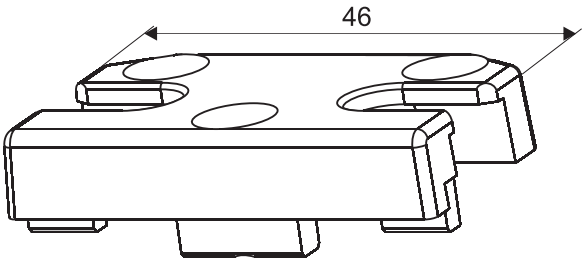

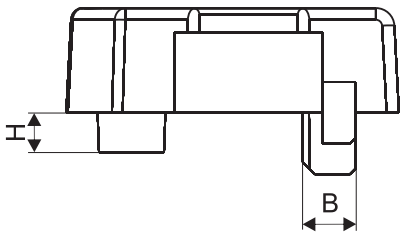

USE:
In turn and turn / tilt windows and balcony doors made of PVC-U profiles listed in the above table. Peripheral anti-unhingement striker plate (PW) is an element of ROMB hardware fitted in the frame in the striker plate grrove. Works with mushroom deadbolts of drive gears and corners. Supports anti-ungingement striker plates fixed in the corners of windows fitted with ROMB 3000 hardware.

PACKING

Subassembly		length [mm]	width [mm]	height [mm]	pcs/ box	box weight [kg]
All types	box	300	180	180	300	13,00
	pallet	1200	800		19200	850,00

Brake striker plate Euronut 7x8

Catalogue No: **023-014**

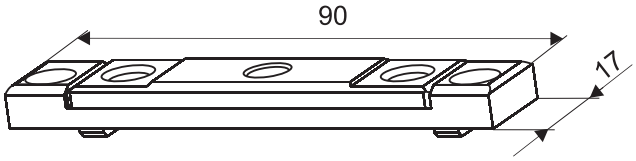

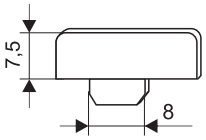

Brake striker plate Eurofalz

Catalogue No: **023-015**

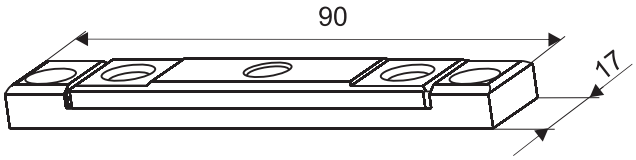

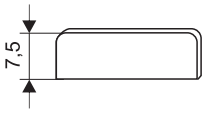

Brake striker plate H9

Catalogue No	*H [mm]*	*Profile system*
023-012	3,7	KBE, Plastmo
023-013	3	PANORAMA, Ergo Plus, EK 100

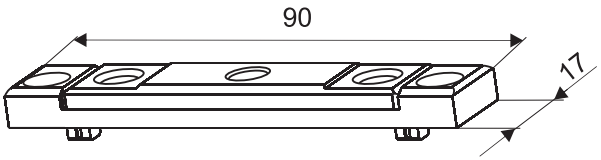

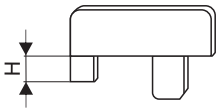

USE:
In turn or turn / tilt windows and balcony doors made of PVC-U profiles listed in the above table and also in wooden ones (**Euronut**, **Eurofalz**).

Brake striker plate (**H9**) is a striker plate type element fitted in the frame which works with tilt restrictor (**ORC**) or sash brake (**HBK**).

PACKING

Subassembly		length [mm]	width [mm]	height [mm]	pcs/ box	box weight [kg]
All types	box	300	180	180	200	10,50
	pallet	1200	800			

Brake striker plate H 13

Catalogue No	A [mm]	B [mm]	H [mm]	Profile system
023-001	0	4	4	Rehau 730-Basic, Rehau Brillant, Rehau 730 -Termo, Royal Gold, Spectus
023-002	0	4	4,5	Dimex-MD, Salamander 2D/3D, Aluplast 4000
023-003	0	4	2,8	Brügmann AD/MD, Aura, Schüco CT, Styl LB 2000, Veka Topline, PlusTec, Ryven
023-004	1	4,6	7	Deceuninck 2000, DECCO 70
023-005	1	4,6	2,9	Trocal Confort, Innonowa
023-006	1,5	4	3,5	Foris, Aluplast 2000
023-007	1,5	4	3,2	Wymar 2500
023-008	1,5	4	4,4	Gealan 3000
023-009	1,5	4	4,9	Kommerling, Schüco AS-60
023-010	1	4	4,2	Roplasto 7001, Roplasto 4K, KBE 70, DECCO 60
023-011	1	4,6	4	Deceuninck Zendow
023-015 + pad **032-009**	1	-	5	Thyssen, Royal Silver

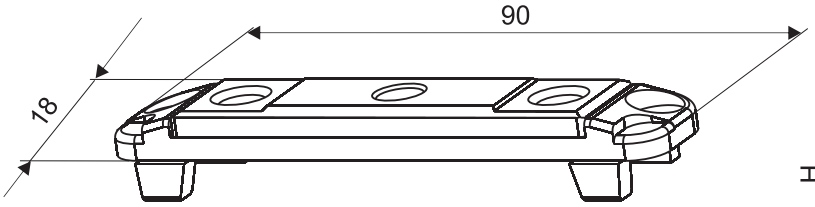

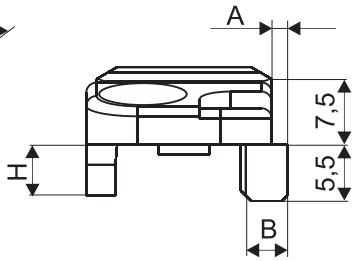

USE:
In turn or turn / tilt windows and balcony doors made of PVC-U profiles listed in the above table.

Brake striker plate (**H13**) is a striker plate type element fitted in the frame which works with tilt restrictor (**ORC**) or sash brake (**HBK**).

PACKING

Subassembly		length [mm]	width [mm]	height [mm]	pcs/ box	box weight [kg]
All types	box	300	180	180	200	10,00
	pallet	1200	800			

STRIKER PLATES

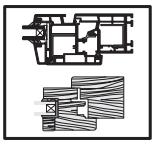

* For Dr Eurofalz system

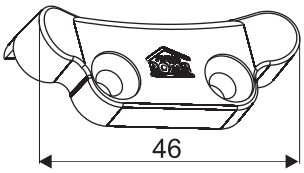

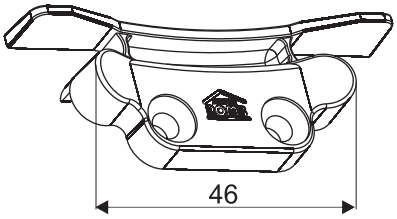

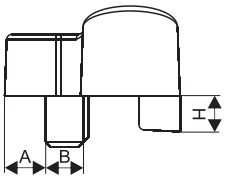

LIFT STRIKER PLATE Tw 13

Catalogue No	A [mm]	B [mm]	H [mm]	Profile system
022-017	2,5	3	5	Tyssen, Tyssen Sigma
022-016	3	4,5	7,2	Deceuninck Mondial 2000
022-015	3	4,7	6,7	Deco 70 (Ortis) 6K, Deco 60 3K
022-014	4,5	4,5	3,2	Trocal Confort, Trocal Innonowa 70/5K
022-013	3,5	3,7	3	LB Styl 2000, Veka Topline, Brugmann
022-012	2,5	3,7	4	Gealan 3000, Deco (Ortis) 4K
022-011	3	4,6	3	Wymar 2500
022-010	3	4,5	4	Deceuninck Zendow
022-009	3	3,7	4	KBE 70
022-008	3,5	3,7	3,5	Foris 60, Foris70, PlusTec
022-007	3,5	3,4	3	Aura 6402,
022-006	3	3,7	4,2	Roplasto 6002, Roplasto 7001
022-005	4	3,7	4,6	Kömmerling Futura 70 Kömmerling Eurodur 60
022-004	4	3,7	-	Salamander
022-003	4	3,7	5	Aluplast 4000/5K, Aluplast 6000/6K Dimex (3K), Schüco AS 60
022-002	4	3,7	2,8	Schüco CT 70 cava/5K, Aluplast 2000, Viva- Plast
022-001		3,7	3,5	Rehau Termo, Rehau Brillant, Spectus Rehau Basic, Royal Gold

LIFT STRIKER PLATE AL

Catalogue No	A [mm]	B [mm]	H [mm]	Profile system
034-007	-	-	5	MB59S
034-008	-	-	3	Spectral

LIFT STRIKER PLATE Dr

Catalogue No	A [mm]	B [mm]	H [mm]	Profile system
022-019	6	8	4	Euronut 7x8
022-018	-	-	-	Eurofalz *

USE:
In PVC-U windows and balcony doors (**Tw**), aluminium (**AL**) and wooden (**Dr**) Euronut, Eurofalz to enable co-operation of the lift with the blockade.

PACKING

Subassembly		length [mm]	width [mm]	height [mm]	pcs/ box	box weight [kg]
All types	box	300	180	180	500	13,00
	pallet	1200	800			
Dr Eurofalz	box	300	180	180	500	9,10
	pallet	1200	800			

External pressure pad

Finish	*catalogue No*
varnished white coat	**030-013**
varnished brown coat	**030-014**
zinc coat	**030-012**

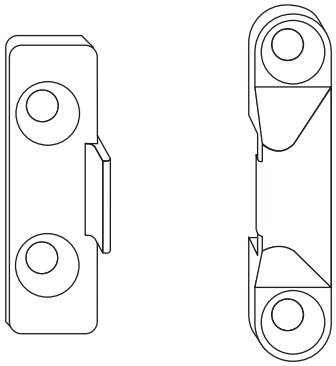

Jig cat. No **038-014**

External connected pressure pad

white	catalogue	No	**030-016**
brown	catalogue	No	**030-018**
gold	catalogue	No	**030-017**

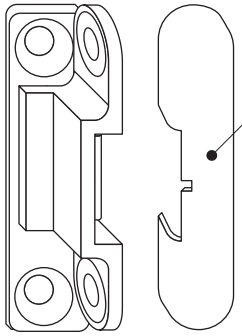

guard in set
with pressure pad

Jig cat. No **038-040**

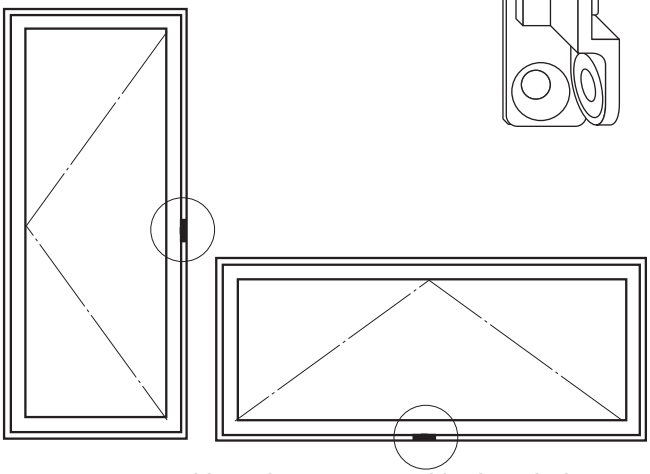

Position of pressure pad in the window

USE:
In sashes of windows **R** (Dr andTw) for **Hw > 800 mm** and in sashes of windows **U** (Dr and Tw (version up to 60 kg) for **Sw > 800 mm**.
Colours acc. RAL: white-9016; brown-8017

PACKING

Subassembly		length [mm]	width [mm]	height [mm]	pcs/ box	box weight [kg]
030-013	box	300	180	180	1000	18,65
body	pallet	1200	800			
030-013	box	300	180	180	1000	15,65
striker plate	pallet	1200	800			
030-014	box	300	180	180	1000	18,65
body	pallet	1200	800			
030-014	box	300	180	180	1000	15,65
striker plate	pallet	1200	800			
030-012	box	300	180	180	1000	18,30
body	pallet	1200	800			
030-012	box	300	180	180	1000	15,25
striker plate	pallet	1200	800			
connected	box	300	180	180	250	8,35
striker plate	pallet	1200	800			

Internal pressure pad - adjustable

Use (Profile)	*Catalogue No*	*System*
Gealan 3000	**030-001**	Tw 13
Wymar 2000, DECCO 70	**030-002**	Tw 13
Wymar 2500	**030-003**	Tw 13
Aluplast Ideal 2000	**030-003**	Tw 13
Roplasto 7001	**030-001**	Tw 13
KBE 70	**030-001**	Tw 13
Rehau, Schüco CT 70	**030-004**	Tw 13
Schüco AS Aluplast 4000	**030-005**	Tw 13
Salamander 2D/3D	**030-006**	Tw 13
Deceuninck Mondial 2000	**030-007**	Tw 13
Deceuninck Zendow	**030-008**	Tw 13
Trocal Confort 11.01.00	**030-009**	Tw 13
Veka Topline	**030-010**	Tw 13

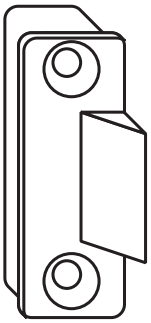

Item 1.

Item 2.

SET INCLUDES:

Item 1. Leaf striker plate - (Subassembly common for every system).
Item 2. Frame striker plate - (Subassembly depending on the system).

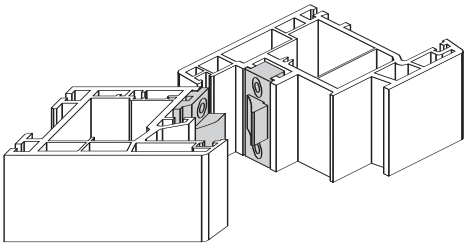

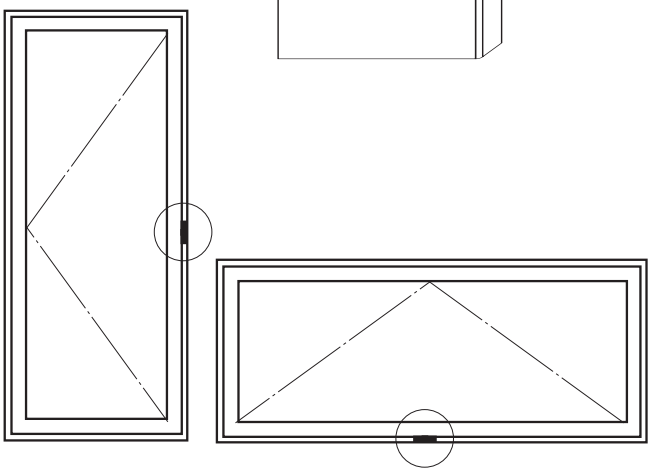

Position of pressure pad in the window

USE:
In sashes of windows **R** (Tw) for **Hw > 800 mm** and in sashes of windows **U** (Tw) (up to 60 kg) for **Sw > 800mm.**

PACKING

Subassembly		length [mm]	width [mm]	height [mm]	pcs/ box	box weight [kg]
030-001	box	300	180	180	300	15,30
	pallet	1200	800			
030-002	box	300	180	180	300	15,30
	pallet	1200	800			
030-003	box	300	180	180	300	15,30
	pallet	1200	800			
030-003	box	300	180	180	300	15,30
	pallet	1200	800			
030-001	box	300	180	180	300	15,30
	pallet	1200	800			
030-001	box	300	180	180	300	15,30
	pallet	1200	800			
030-004	box	300	180	180	300	15,30
	pallet	1200	800			
030-005	box	300	180	180	300	15,30
	pallet	1200	800			
030-006	box	300	180	180	300	15,30
	pallet	1200	800			
030-007	box	300	180	180	300	15,30
	pallet	1200	800			
030-008	box	300	180	180	300	15,30
	pallet	1200	800			
030-009	box	300	180	180	300	15,30
	pallet	1200	800			
030-010	box	300	180	180	300	15,30
	pallet	1200	800			

Stop block DrC

Catalogue No **032-003**

USE:
In sashes of windows (Dr) as an element holding lower hinge leaf DrC and middle hinge leaf DrC in hardware groove.
In sashes of windows with a so-called movable post as an element holding lock Tw.
Facilitates proper leading of the screw during assembling the above mentioned hardware

PACKING

Subassembly		length [mm]	width [mm]	height [mm]	pcs/ box	box weight [kg]
Stop block	box	300	180	180	500	2,10
	pallet	1200	800			

Stop block S5

Catalogue No **032-004**

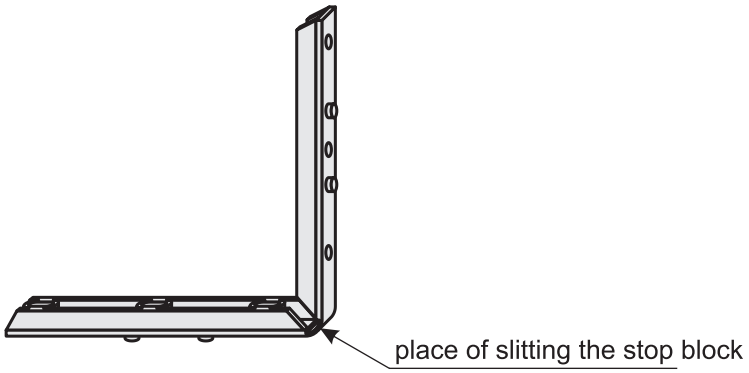

USE:
Supplementary element used only in windows with hardware channel.
Works with lower hinge leaf S5, and after cutting with middle hinge leaf S5 or corner hinge leaf S5.

PACKING

Subassembly		length [mm]	width [mm]	height [mm]	pcs/ box	box weight [kg]
Block S5	box	310	185	185	100	2,60
	pallet	1200	800	890		

HOLDER'S ARM

Catalogue No **031-010 (white)**
Catalogue No **031-009 (brown)**

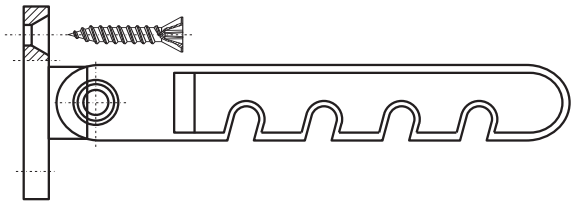

Striker plate for rebate "15"

Catalogue No **031-011** (varnished white)

WHILE THE STOCK LASTS !!!

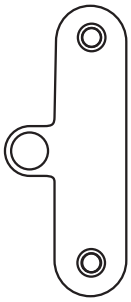

Top striker plate

Catalogue No **031-012** (varnished white)

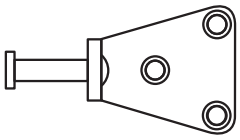

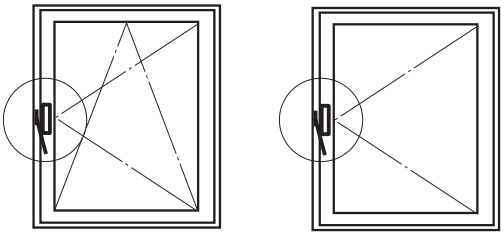

Holder's location in the window

PACKING

Subassembly		length [mm]	width [mm]	height [mm]	pcs/ box	box weight [kg]
Holder's arm	box	300	180	180	500	4,25
	pallet	1200	800			
Striker plate 15	box	300	180	180	500	8,15
	pallet	1200	800			
Top striker plate	box	300	180	180	500	10,00
	pallet	1200	800			

NOTE:
For varnished striker plates - white colour **Ral 9016**

Transmission guard

Catalogue No **032-002**

Material: HARDENED STEEL

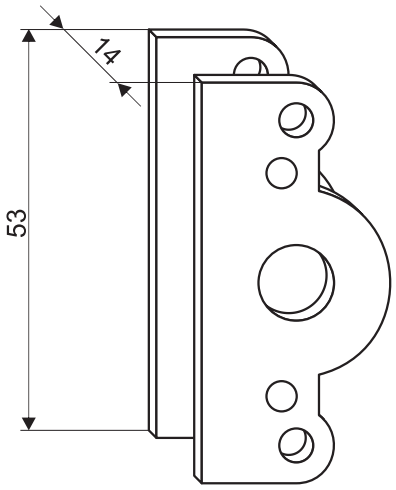

USE:
In hardware set ROMB 3000 (hardware with enhanced resistance to burglary).
Protects drive gear transmission against drilling from the outside during burglary attempt.

NOTE: required widening of the socket for drive gear transmission.

PACKING

Subassembly		length [mm]	width [mm]	height [mm]	pcs/ box	box weight [kg]
transmission guard	box	300	180	180	300	5,30
	pallet	1200	800			

Lift striker plate with blockade

Catalogue No **1AK0803UX**

WHILE THE STOCK LASTS !!!

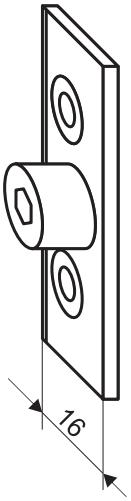

USE:
In windows Tw with movable post (version with locks).

PACKING

Subassembly		length [mm]	width [mm]	height [mm]	pcs/ box	box weight [kg]
101-620-000	box	300	180	180	1000	16,00
	pallet	1200	800			

Anti-wind blockade

(limiting tilting)

Catalogue No **032-014**

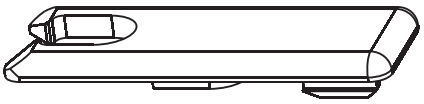

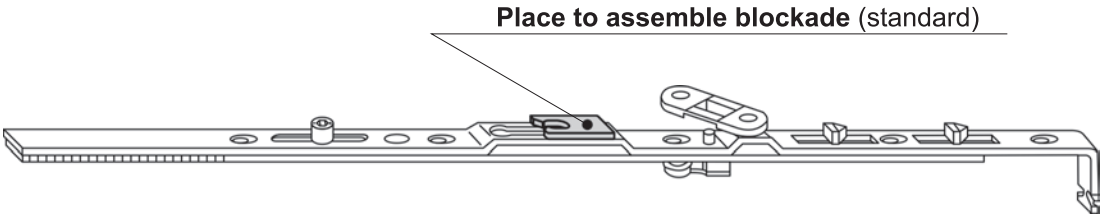

USE:
In windows **RU** (**Dr** and **Tw**) working with stay and stay arm. Blockade acts as a latch, holding stay arm in tilting position in case of draught or a strong gust of wind.
NOTE:
Blockade catalogue No **032-014** additionally limits tilting of the sash.
Recommended for using in windows **Hw < 600 mm**.

Distance pad for striker plate B

Profile type	*Catalogue No*	
Dr 11-7×8	**032-008**	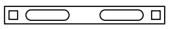
EK100, Panorama, Roplasto System 6190, Trocal 900	**032-005**	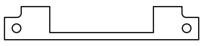

Distance pad for striker plate B/R

Profile type	*Catalogue No*	
Royal, Thyssen	**032-009**	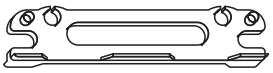

PACKING

Subassembly		length [mm]	width [mm]	height [mm]	pcs/ box	box weight [kg]
1AL1604UX	box	300	180	180	500	1,95
	pallet	1200	800			
1AL1601UX	box	300	180	180	500	1,20
	pallet	1200	800			
1AL1605UX	box	300	180	180	500	1,45
	pallet	1200	800			

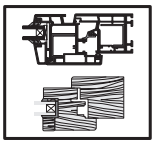

Slide plate

Catalogue No **036-010**

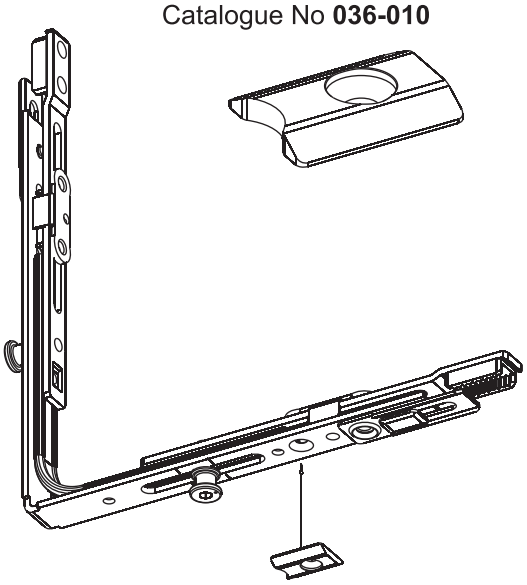

USE:
In sashes of trapezoid and arched windows as an element facilitating work of corner **D** with striker plate **PWD**. Used in range **Sw 510-640**, where it is not possible to assemble gliding connector and glider.

Distance insert pad Tw

Catalogue No **032-013**

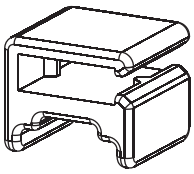

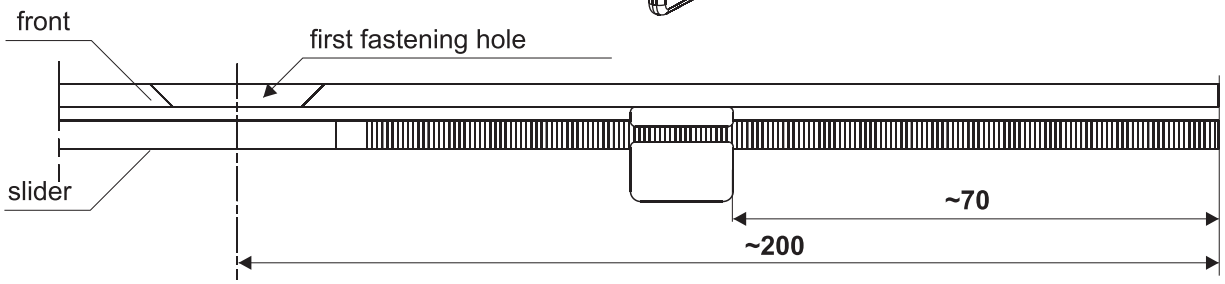

USE:
In sashes of PVC-U windows for fitting in subassemblies of ROMB hardware within parts ended with prongs.

Plays a role of a stabiliser and distance between two co-operating elements (front and slider) in ROMB hardware subassemblies.

It is recommended to use the pad in all hardware subassemblies where after cutting off the slider and front it remains more than ½ of the part with prongs but not less than 200 mm, counting from the edge of the cut to the first fastening hole. It is possible to use it in wooden windows.

PACKING

Subassembly		length [mm]	width [mm]	height [mm]	pcs/ box	box weight [kg]
Distance insert pad	box	300	180	180	4000	2,45
	pallet	1200	800			

Hardware guards TwO

Use		Guards type	Finish	Catalogue No
Lower hinge leaf TwO		IA	white	033-001
			brown	033-002
			(F4) gold	033-004
			silver	033-003
Lower hinge bracket TwO		II B	white	033-007
			brown	033-008
			(F4) gold	033-010
			silver	033-009
Upper hinge bracket TwO		III B	white	033-011
			brown	033-012
			(F4) gold	033-015
			silver	033-014
Corner hinge leaf TwO stay arm TwO		IV A	white	033-018
			brown	033-019
			(F4) gold	033-022
			silver	033-021
Notch lower hinge leaf		IX	white left	033-049
			white right	033-050
			brown left	033-051
			brown right	033-052
			silver left	033-053
			silver right	033-054
			(F4) gold left	033-055
			(F4) gold right	033-056
Notch lower hinge bracket (welded)		X A	white	033-057
			brown	033-058
			(F4) gold	033-061
			silver	033-060
rebate hinge leaf		IV B	white	033-075

PACKING

Subassembly		length [mm]	width [mm]	height [mm]	pcs/ box	box weight [kg]
IA	box	300	180	180	300	1,70
	pallet	1200	800			
II B	box	300	180	180	300	0,85
	pallet	1200	800			
III B	box	310	185	185	300	0,75
	pallet	1200	800	890		
IV A	box	310	185	185	1000	1,55
	pallet	1200	800	890		
IX	box	310	185	185	300	0,90
	pallet	1200	800	890		
X A	box	310	185	185	1000	0,85
	pallet	1200	800	890		

NOTE:
Guards **nr IIIB** and **IVA** can also be used in hardware **S5**.

Hardware guards DrC

Use		*Guards type*	*Finish*	*Catalogue No*
Lower hinge leaf DrC (with self adjustment)		**V A**	white left	**033-025**
			white right	**033-026**
			brown left	**033-027**
			brown right	**033-028**
			(F4) gold left	**033-031**
			(F4) gold right	**033-032**
			silver left	**033-029**
			silver right	**033-030**
Lower hinge bracket DrC	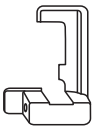	**VI B**	white left	**033-033**
			white right	**033-034**
			brown left	**033-035**
			brown right	**033-036**
			(F4) gold left	**033-039**
			(F4) gold right	**033-040**
			silver left	**033-037**
			silver right	**033-038**
Corner hinge leaf DrC stay arm DrC		**VII**	white	**033-041**
			brown	**033-042**
			(F4) gold	**033-044**
			silver	**033-043**
Upper hinge bracket DrC		**VIII**	white	**033-045**
			brown	**033-046**
			(F4) gold	**033-048**
			silver	**033-047**

PACKING

Subassembly		length [mm]	width [mm]	height [mm]	pcs/ box	box weight [kg]
V A	box	300	180	180	300	0,95
	pallet	1200	800			
VI B	box	300	180	180	300	0,95
	pallet	1200	800			
VII	box	300	180	180	300	0,45
	pallet	1200	800			
VIII	box	300	180	180	300	1,00
	pallet	1200	800			

Hardware guards S5

Use		Guard type	Finish	Catalogue No
Upper hinge bracket S5		III B	white	033-011
			brown	033-012
			(F4) gold	033-015
			silver	033-014
Corner hinge leaf S5 stay arm S5		IV A	white	033-018
			brown	033-019
			(F4) gold	033-022
			silver	033-021
Lower hinge leaf S5		IX B	white left	033-064
			white right	033-065
			brown left	033-066
			brown right	033-067
			(F4) gold left	033-070
			(F4) gold right	033-071
			silver left	033-068
			silver right	033-069
Lower hinge bracket S5		X A	white	033-057
			brown	033-058
			silver	033-060
			(F4) gold	033-061

ALU KARO hardware guards

Use		Guard type	Finish	Catalogue No
Lower notch hinge leaf (AL)		IX A	white left	034-015
			white right	034-016
			brown left	034-017
			brown right	034-018
			silver left	034-021
			silver right	034-022

For RAL 9006 (silver) cat. No **034-019** left
034-020 right

PACKING

Subassembly		length [mm]	width [mm]	height [mm]	pcs/ box	box weight [kg]
III B	box	310	185	185	300	0,75
	pallet	1200	800	890		
IV A	box	310	185	185	1000	1,55
	pallet	1200	800	890		
IX B	box	310	185	185	300	0,90
	pallet	1200	800	890		
X A	box	310	185	185	1000	0,85
	pallet	1200	800	890		
IX A	box	310	185	185	1000	0,90
	pallet	1200	800	890		

NOTE:
Guards **IIIB** and **IVA** may also be used in hardware **TwO**.
Guard **XA** is to be used in lower notch hinge.

Tilt restrictor's arm

Catalogue No Left L **011-001**
Right R **011-002**

Tilt restrictor's striker plate

Catalogue No **011-003**

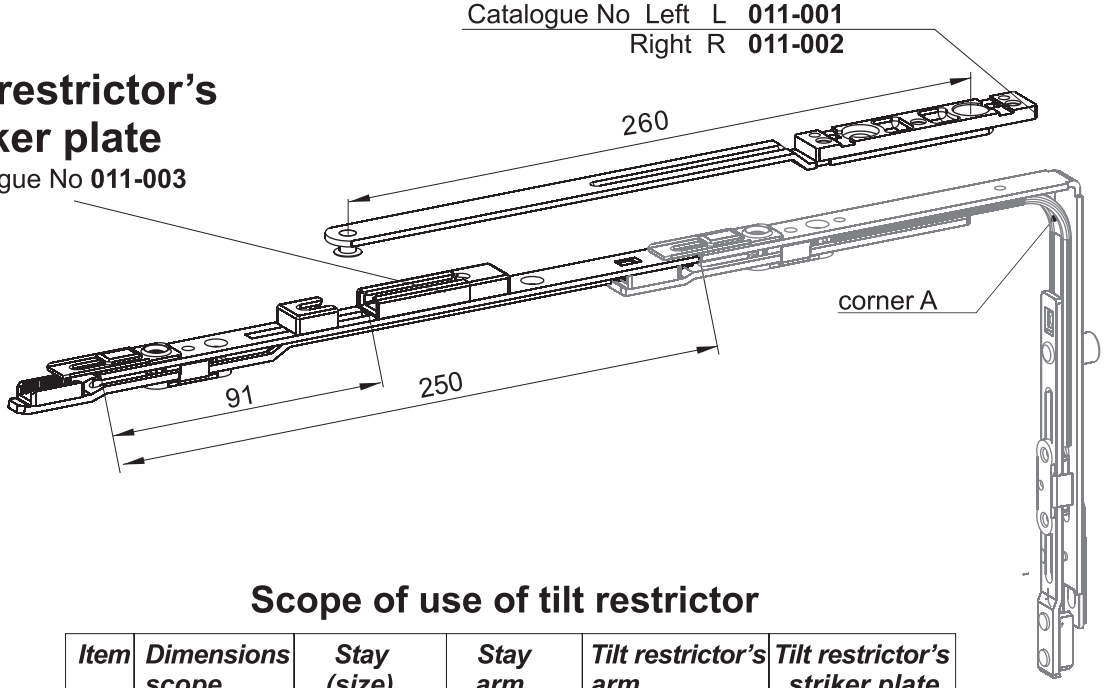

Scope of use of tilt restrictor

Item	*Dimensions scope (Sw) [mm]*	*Stay (size)*	*Stay arm (size)*	*Tilt restrictor's arm L or R*	*Tilt restrictor's striker plate*
1	1201-1450	4	3	offered	offered
1	1451-1600	4a	3	offered	offered

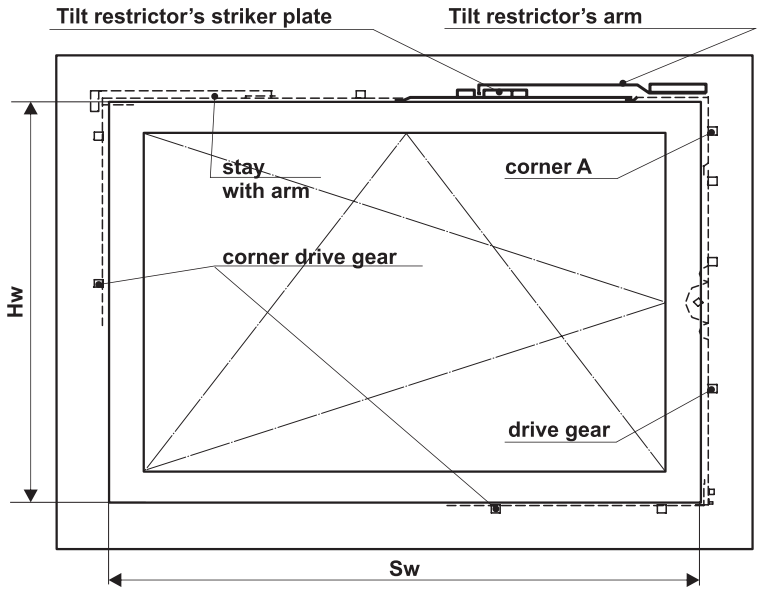

USE:
In sashes of windows **RU** (**Dr** and **Tw**), as a subassembly providing additional holding of the sash in tilted position.
Recommended for using in the following dimension scopes:
Sw = 1201 mm to 1600 mm.

NOTE:
1. Tilt restrictor works **only with corner "A"**.
2. In wooden windows EURONUT restrictor's arm should be assembled together with pad cat. No **032-008**.
3. In PVC-U windows tilt restrictor's arm should be assembled with a pad depending on the system.

PACKING

Subassembly		length [mm]	width [mm]	height [mm]	pcs/ box	box weight [kg]
Restrictor's arm	box	380	85	50	50	2,30
	pallet	1200				
Restrictor's striker plate	box	300	85	50	20	3,18
	pallet	1200				

Turn restrictor ORC

Size	*Catalogue No*	*L*
ORC 240	**031-007**	240
ORC 365	**031-008**	365

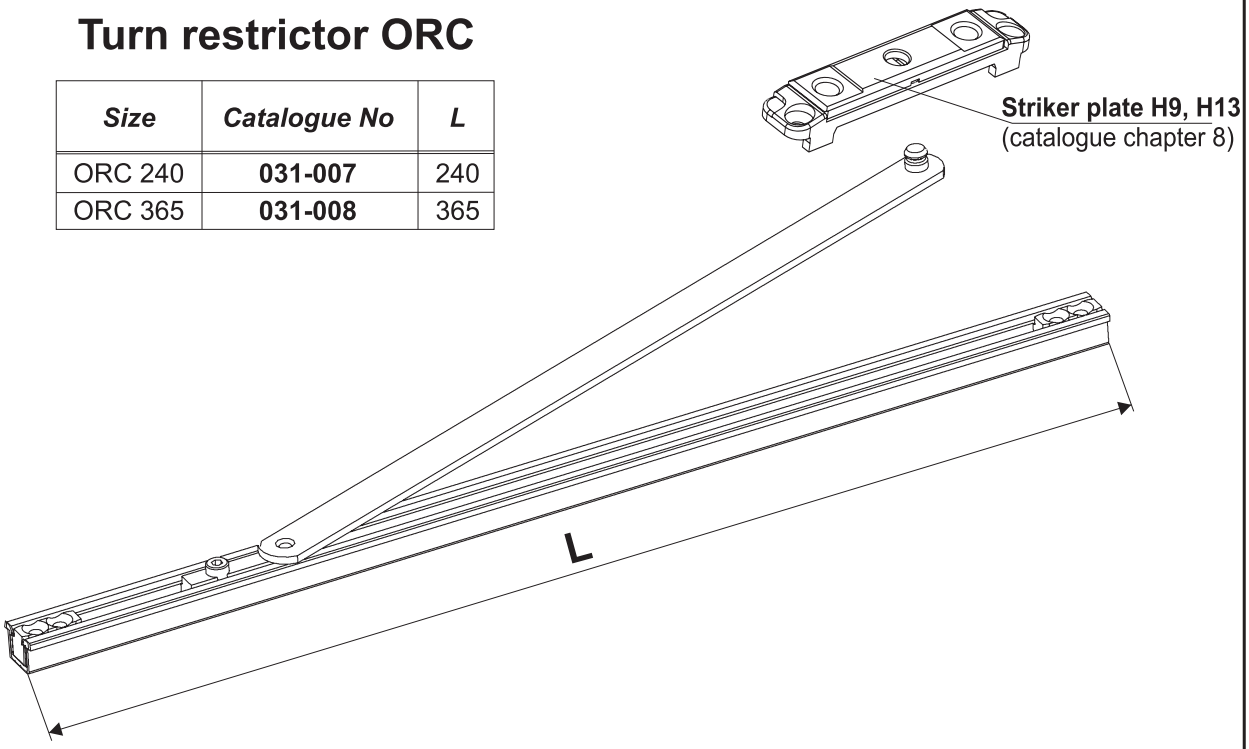

USE:
Turn restrictor (**ORC**) is an additional accessory for ROMB hardware.
Its function is to limit the turning of the window sash to the angle ca 90°.

Recommended mainly for using in turn windows and balcony doors (**R**), wooden Eurnonut, Eurofalz and PVC-U with notch clearance **min. 12 mm**. Depending on the type of hardware, it is fitted in the upper or lower part of sash stile (striker plate in hardware channel).

In turn / tilt windows turn restrictor may be used only in the lower part of the window. If it is necessary to use turn restrictor for the window scope **Sw > 800** (**Tw**) or **1000** (**Dr**), it is recommended to assemble it with corner drive gear (**NR**) according to **table 1** (page 9/15).

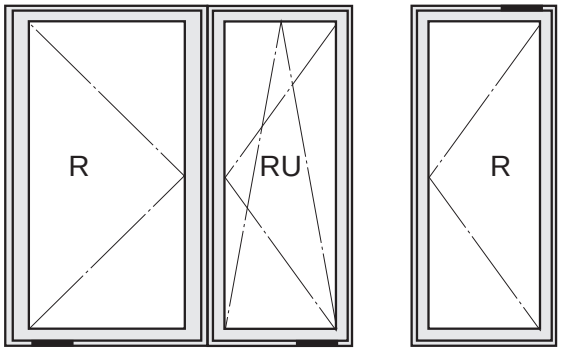

PACKING

Subassembly		length [mm]	width [mm]	height [mm]	pcs/ box	box weight [kg]
ORC 240	box	380	85	50	10	1,35
	pallet	1200	800			
ORC 365	box	470	85	50	10	1,75
	pallet	1200	800			

TURN RESTRICTOR ORC
FITTING RULES

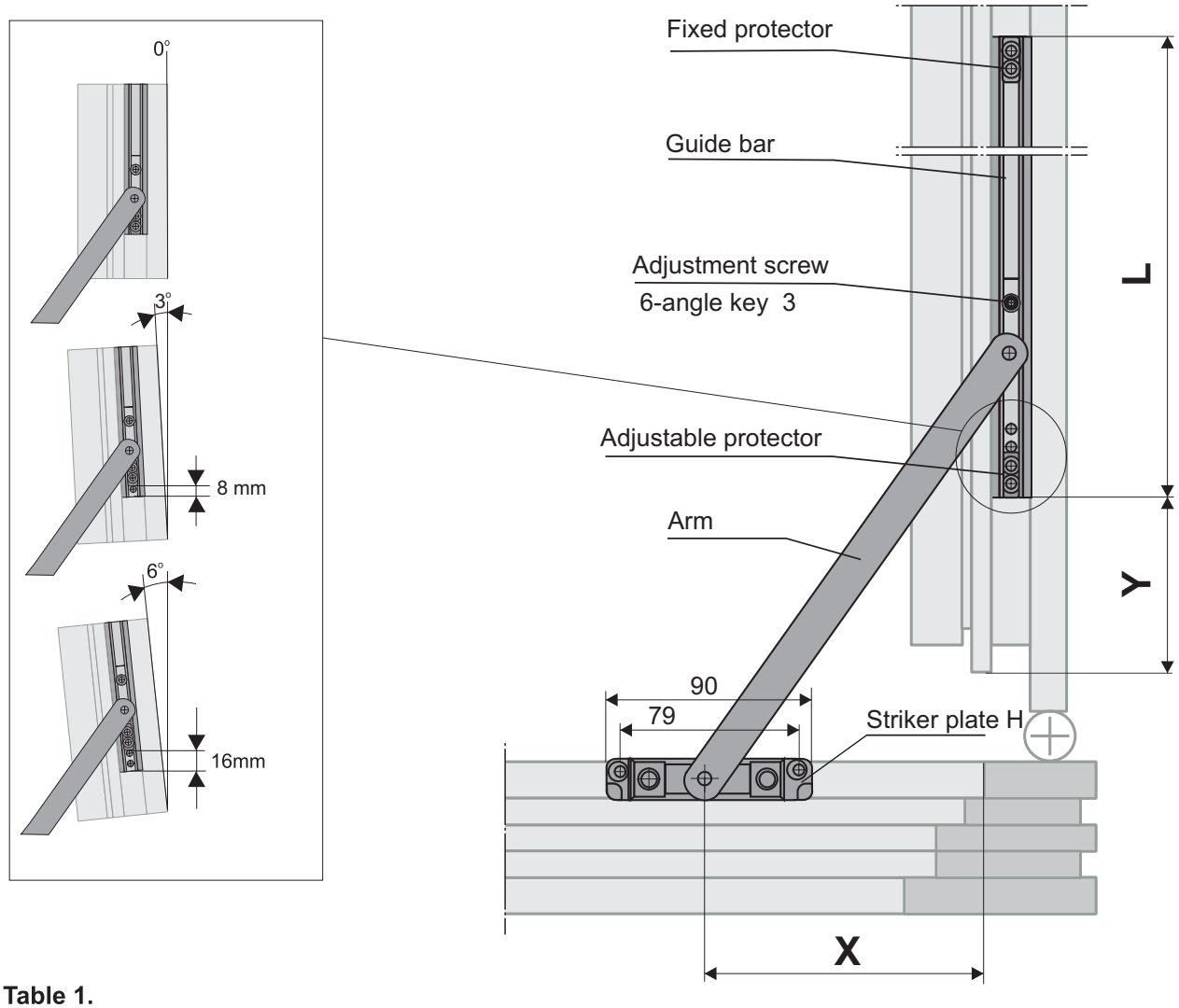

Table 1.

Turn restrictor	*X*	*Y*	*L*	*Corner drive gear NR*	*Scope of use Sw*	
					from	*to*
ORC - 240	91	130	240	-	390	550
ORC - 365	172	130	365	-	515	800*
ORC - 365	172	130	365	NU 0	801	900
ORC - 240	91	130	240	NR 1	901	1025
ORC - 365	172	130	365	NR 1	1026	1110
ORC - 240	91	130	240	NR 2	1111	1235
ORC - 365	172	130	365	NR 2	1236	1450

* for windows (Dr) Sw max. 1000 [mm]

Table 2.

Corner hinge leaf	*Catalogue No*
TwH 9	**017-007**
TwH 13	**017-008**
TwH 13/21	**017-009**
Dr 12/S5	**017-002**

Note:
Turn restrictor in the upper part may be fitted only with corner hinge leaf according to **table 2**.

Sash lift

Catalogue No **032-001**

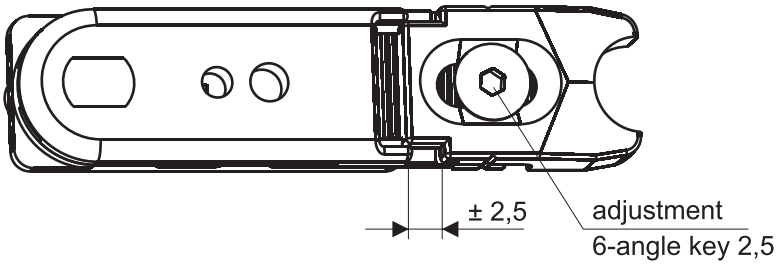

Left or right version of the sash lift is obtained by pressing the spring in the hole and bending the arm.

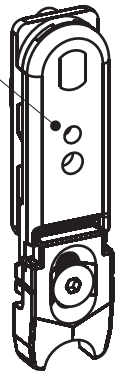

Place to assemble the lift.

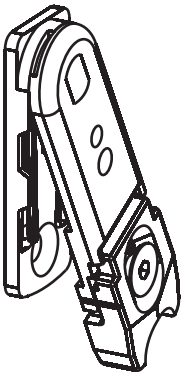

Position of the lift arm - left

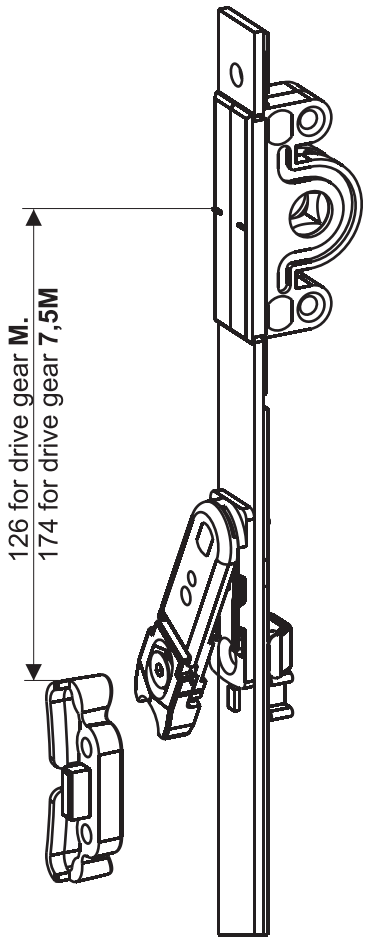

Place to assemble the lift striker plate.

USE:
In sashes of windows (RU and R) wooden or PVC-U as an element holding the sash in fixed position toward the frame. Facilitates closing of heavy sashes by lifting them with little effort. Equipped with blockade eliminating the possibility of displacement of the hardware from tilted into turned position, as well as displacement of a turned sash into closed or titled position.
Vertical adjustment range is ±2,5 mm on the lift arm.
Possible use in drive gears M1÷M5, Z2÷Z9 and 7,5M1÷7,5M5.

PACKING

Subassembly		length [mm]	width [mm]	height [mm]	pcs/ box	box weight [kg]
sash lift	box	300	180	180	500	37,00
	pallet	1200	800			

Sash brake HBK

Size	*Catalogue No*	*L1*	*L*
HBK 1	**031-001**	-	625
HBK 2	**031-002**	496	800

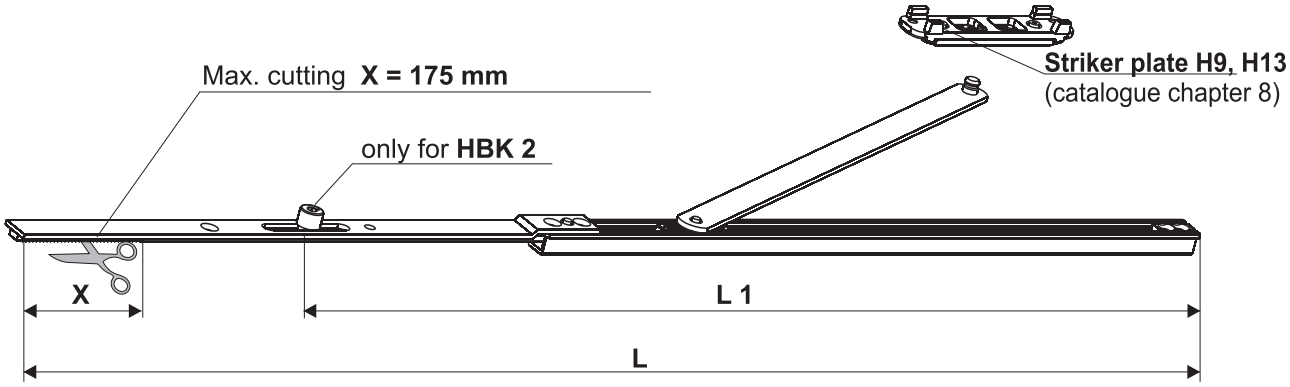

USE:
In turn / tilt and turn windows and balcony doors (Dr and Tw), as an element enabling blocking turned sash in different angles. The operating functions are performed with the handle which transfers drive through successively connected hardware subassemblies. Minimum angle of turning with blocking of the sash is 15.
NOTE:
It is not recommended to use brake HBK for turn / tilt windows and balcony doors with **Hw < 2000 mm.**

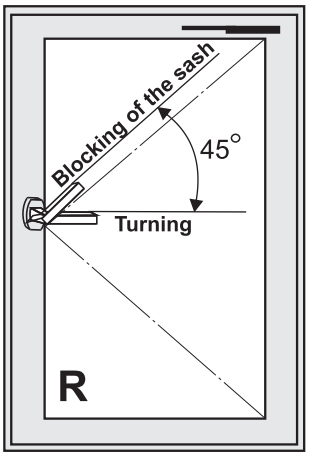

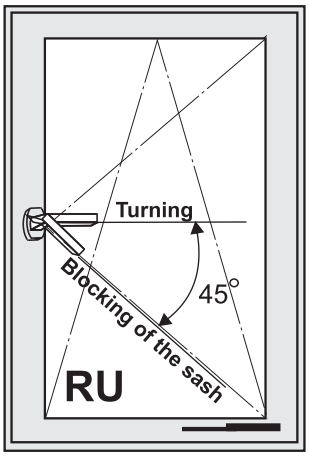

PACKING

Subassembly		length [mm]	width [mm]	height [mm]	pcs/ box	box weight [kg]
HBK 1	box	660	85	50	10	3,70
	pallet	1200	800			
HBK 2	box	920	85	50	10	4,55
	pallet	1200	800			

SASH BRAKE HBK
FITTING RULES

Coordinates for fitting the brake for sash turning 90 ± 5°

Brake size	*X*	*Y*	*L*	*Scope of use Sw*	
				From	*To*
HBK 1	172	130	625	740	915
HBK 2	172	130	800	916	1090

Coordinates for fitting the brake for sash turning 120 ± 5°

Brake size	*X*	*Y*	*L*	*Scope of use Sw*	
				From	*To*
HBK 1	130	91	625	700	875
HBK 2	130	91	800	876	1050

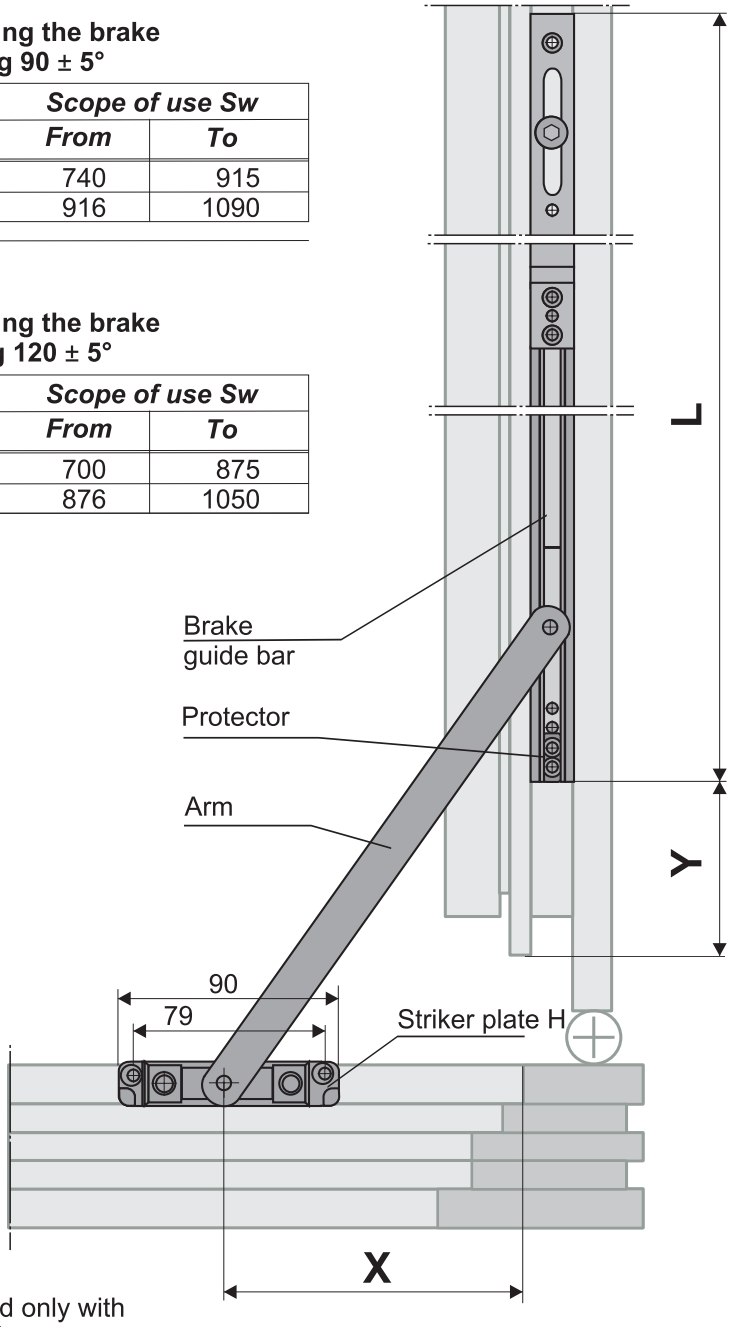

Note:
Sash brake in the upper part may be assembled only with corner hinge leaf **TwH**, according to the **table 2**.
Reducing the minimum scope of using the brake is possible in case of using the corner **S** or **US** to transfer drive, **however only in turn windows.**

Recommended method of transferring drive in turn / tilt windows. From drive gear **M** to corner **U**, **U1** or **U2** and then to the brake in the lower part of the sash.

Recommended method of transferring drive in turn windows. From drive gear M to corner **A**, **U** or **S** and then to the brake in the upper part of the sash.

Table 2.

Corner hinge leaf	*Catalogue No*
TwH 9	**017-007**
TwH 13	**017-008**
TwH 13/21	**017-009**
Dr 12/S5	**017-002**

BALCONY LATCH

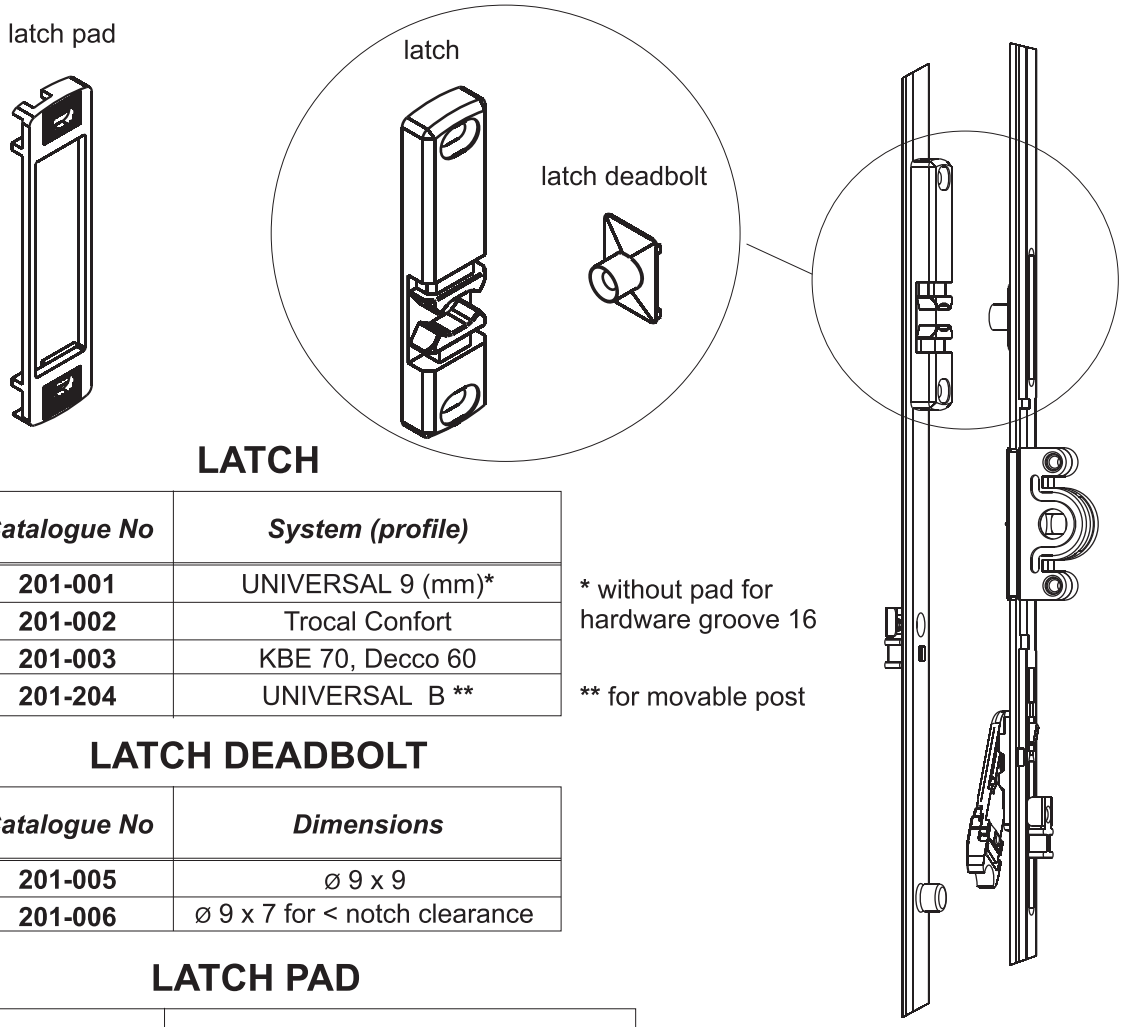

LATCH

Catalogue No	System (profile)
201-001	UNIVERSAL 9 (mm)*
201-002	Trocal Confort
201-003	KBE 70, Decco 60
201-204	UNIVERSAL B **

* without pad for hardware groove 16

** for movable post

LATCH DEADBOLT

Catalogue No	Dimensions
201-005	ø 9 x 9
201-006	ø 9 x 7 for < notch clearance

LATCH PAD

Catalogue No	System (profile)
201-007	Aluplast 2000
201-008	Aluplast 4000
201-009	Deceuninck Mondial 2000
201-010	Gealan 3000, 7000, 8000, Roplasto
201-011	Rehau
201-012	SALAMANDER
201-013	Veka Topline, Brügmann, Aura, Plustec
201-014	Veka Softline
201-015	Schüco AS 60, DIMEX MD
201-016	KBE 106 (system 9 mm)
201-017	Deceuninck Zendow
201-018	DECCO 70
201-019	Wymar 2500

USE:
In turn and turn / tilt balcony doors (**Tw**) as an element enabling positioning the sash toward the frame without locking the sash (mainly when going out on the balcony). Universal latch (**B**) designed for movable post, universal

PACKING

Subassembly		length [mm]	width [mm]	height [mm]	pcs/ box	box weight [kg]
Latch	box	300	180	180	300	19,40
	pallet	1200	800			
Deadbolt	box	300	180	180	300	1,70
	pallet	1200	800			
Pad	box	300	180	180	300	3,70
	pallet	1200	800			

Balcony latch (PVC-U)

latch

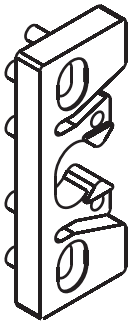

latch deadbolt

LATCH

Catalogue No	System (profile)
202-001	Trocal Confort
202-002	Aluplast 4000
202-003	Rehau
202-004	Veka Softline

LATCH DEADBOLT

Catalogue No	Dimensions
202-005	ø 11 x 8

USE:
In turn and turn / tilt balcony doors (**Tw**) as an element enabling positioning the sash toward frame without locking the sash (mainly when going out on the balcony).

PACKING

Subassembly		length [mm]	width [mm]	height [mm]	pcs/ box	box weight [kg]
Latch	box	300	180	180	300	3,20
	pallet	1200	800			
Deadbolt	box	300	180	180	300	2,20
	pallet	1200	800			

Limiting pad

Catalogue No 032-015

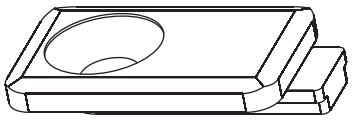

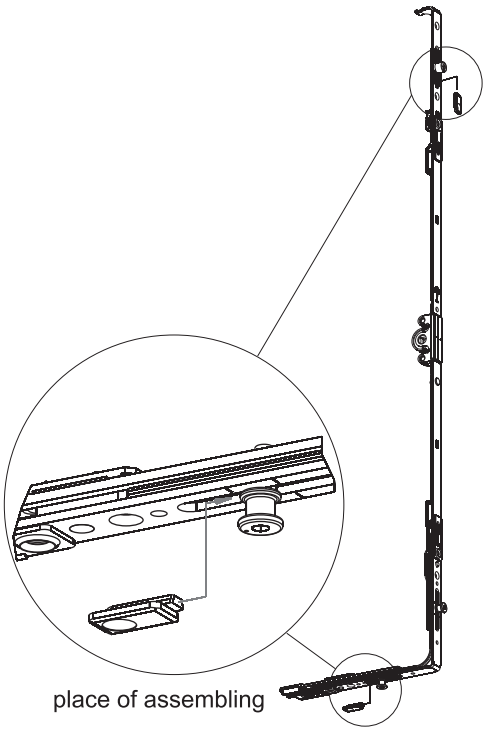

USE:
In sashes of turn windows **(Tw, DR, Al)**, alternatively working with corner or end 5, as an element limiting hardware throw and preventing displacement of the hardware from “turned” position into “tilted“ position.

PACKING

Subassembly		length [mm]	width [mm]	height [mm]	pcs/ box	box weight [kg]
Limiting pad	box	300	180	180	1000	3,30
	pallet	1200	800			

PERIPHERAL HARDWARE ROMB
FOR PVC-U TRAPEZOID WINDOWS TwO

TURN / TILT VERSION /RU/

On special order. Deadline to be agreed with company's Sales Department.

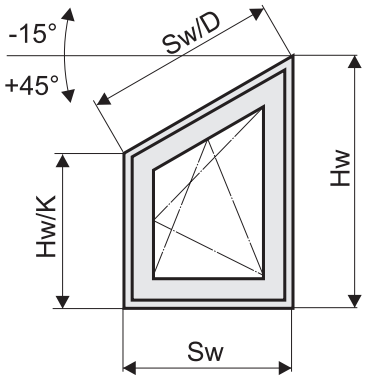

max. sash weight 80 kg

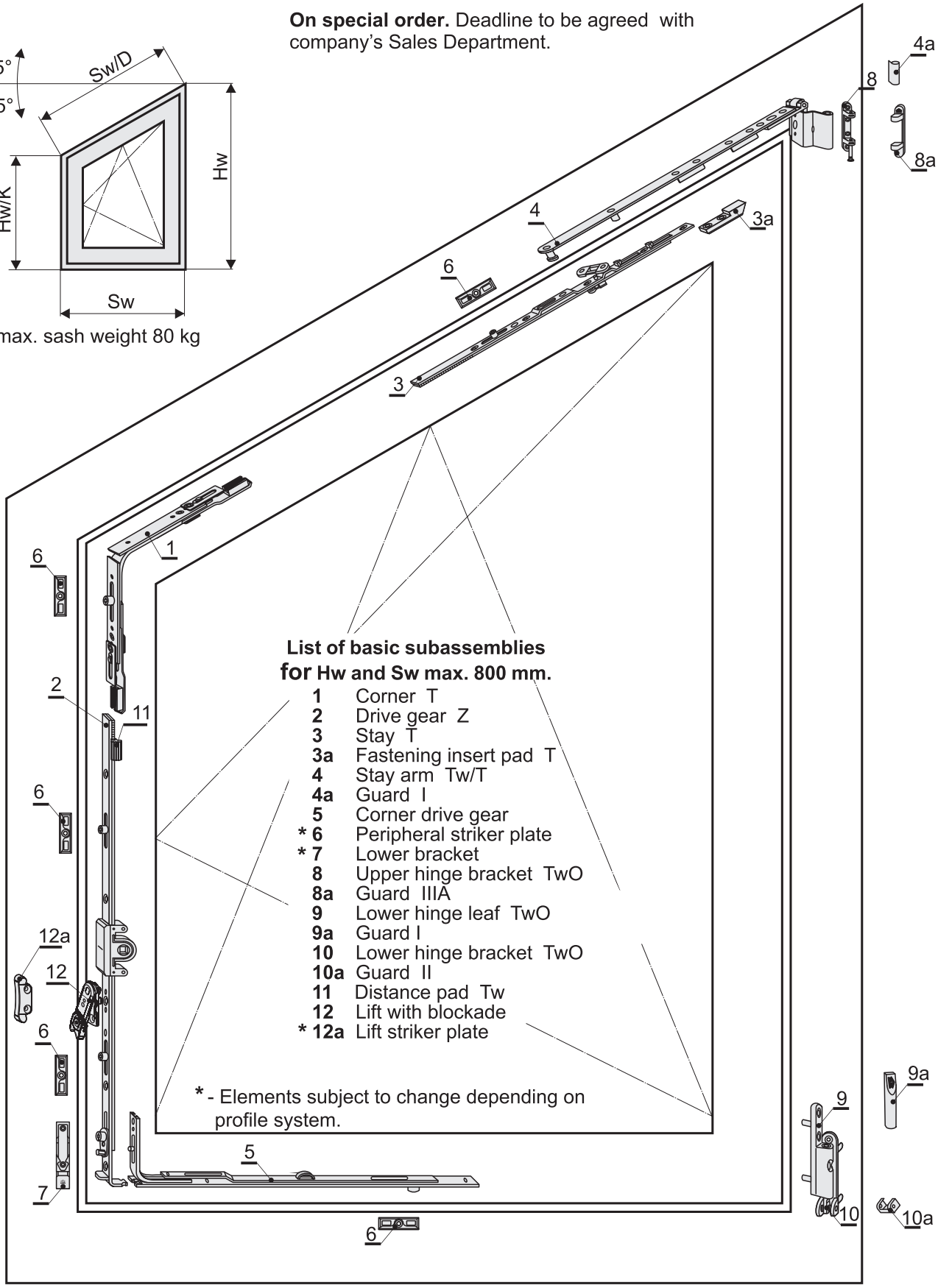

List of basic subassemblies for Hw and Sw max. 800 mm.

1	Corner T
2	Drive gear Z
3	Stay T
3a	Fastening insert pad T
4	Stay arm Tw/T
4a	Guard I
5	Corner drive gear
*** 6**	Peripheral striker plate
*** 7**	Lower bracket
8	Upper hinge bracket TwO
8a	Guard IIIA
9	Lower hinge leaf TwO
9a	Guard I
10	Lower hinge bracket TwO
10a	Guard II
11	Distance pad Tw
12	Lift with blockade
*** 12a**	Lift striker plate

* - Elements subject to change depending on profile system.

PERIPHERAL HARDWARE ROMB
FOR WOODEN TRAPEZOID WINDOWS Dr

TERN / TILT VERSION /RU/

On special order. Deadline to be agreed with company's Sales Department.

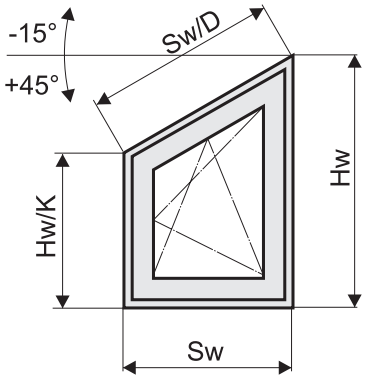

max. sash weight 80 kg

List of basic subassemblies for Hw and Sw max. 1000 mm.

1	Corner T
2	Drive gear Z
3	Stay T
3a	Fastening insert pad T
4	Stay arm Dr/T
4a	Guard VII
5	Corner drive gear
*** 6**	Peripheral striker plate
*** 7**	Lower striker plate
8	Upper hinge bracket Dr
8a	Guard VIII
9	Lower hinge leaf Dr/Tw
9a	Guard I
10	Lower hinge bracket Dr/Tw
10a	Guard II
11	Distance pad Dr
12	Lift with blockade
*** 12a**	Lift striker plate

***** - Elements subject to change depending on profile system (Dr 11 Euronut, Dr 11 Eurofalz)

PERIPHERAL HARDWARE ROMB
FOR WOODEN TRAPEZOID WINDOWS S5

TURN / TILT VERSION /RU/

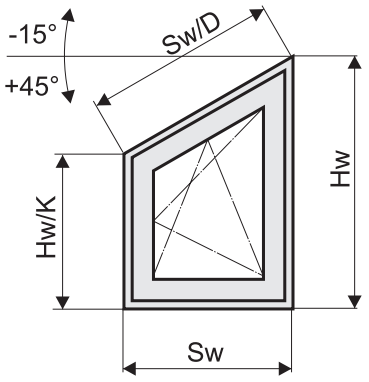

max. sash weight 80 kg

WHILE THE STOCK LASTS !!!

List of basic subassemblies for Hw and Sw max. 1000 mm.

1	Corner T
2	Drive gear Z
3	Stay T
3a	Fastening insert pad T
4	Stay arm Dr/T
4a	Guard VII
5	Corner drive gear
*** 6**	Peripheral striker plate
*** 7**	Lower striker plate
8	Upper hinge bracket Dr
8a	Guard VIII
9	Lower hinge leaf S5 L/P
9a	Guard IXB L/P
10	Lower hinge bracket S5
10a	Guard XA
11	Distance pad Dr
12	Lift with blockade
*** 12a**	Lift striker plate

***** - Elements subject to change depending on profile system (Dr 11 Euronut, Dr 11 Eurofalz)

Corner T

cylinder deadbolt

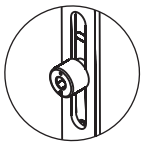

Catalogue No **037-027**

mushroom deadbolt

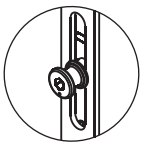

Catalogue No **037-001**

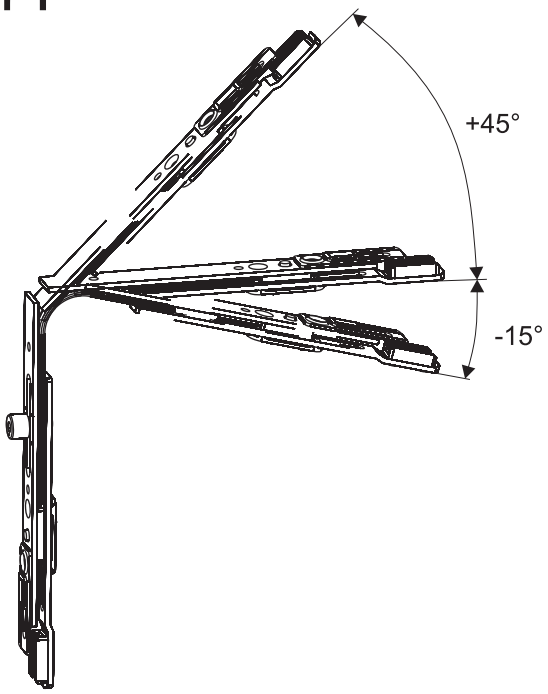

On special order. Deadline to be agreed with company's Sales Department.

USE:
In sashes of trapezoid windows **RU** (**Tw**), (**Dr**) Corner T is a basic subassembly transmitting drive from drive gear to stay in trapezoid windows.

Minimum scope of use Sw > 400 mm.

PACKING

Subassembly		length [mm]	width [mm]	height [mm]	pcs/ box	box weight [kg]
T	box	400	290	80	50	10,00
	pallet	1200	800			

Fastening insert pad T

Catalogue No **037-026**

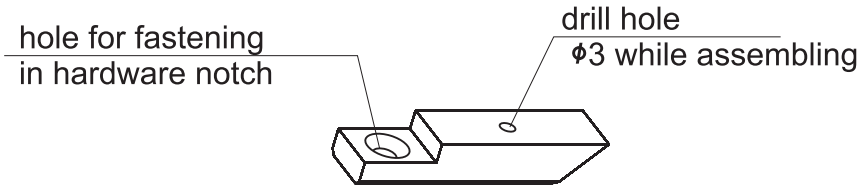

On special order. Deadline to be agreed with company's Sales Department.

USE:
In sashes of trapezoid windows **RU** (**Tw**), (**Dr**) as a complementary element for fastening stay T.

PACKING

Subassembly		length [mm]	width [mm]	height [mm]	pcs/ box	box weight [kg]
Insert pad T	box	300	180	180	500	2,10
	pallet	1200	800			

Stay arm TwO T

Size	Catalogue No	Scope of use SwD	L	B	feature
1	**037-014**	400-510	244	65	9
2	**037-015**	511-830	329	80	
3	**037-016**	821-1450	469	120	
1	**037-017**	290-510	244	65	13
2	**037-018**	511-830	329	80	
3	**037-019**	821-1450	469	120	
1	**037-020**	400-510	244	65	13/21
2	**037-021**	511-830	329	80	
3	**037-022**	821-1450	469	120	
1	**037-023**	290-510	244	65	14
2	**037-024**	511-830	329	80	
3	**037-025**	821-1450	469	120	

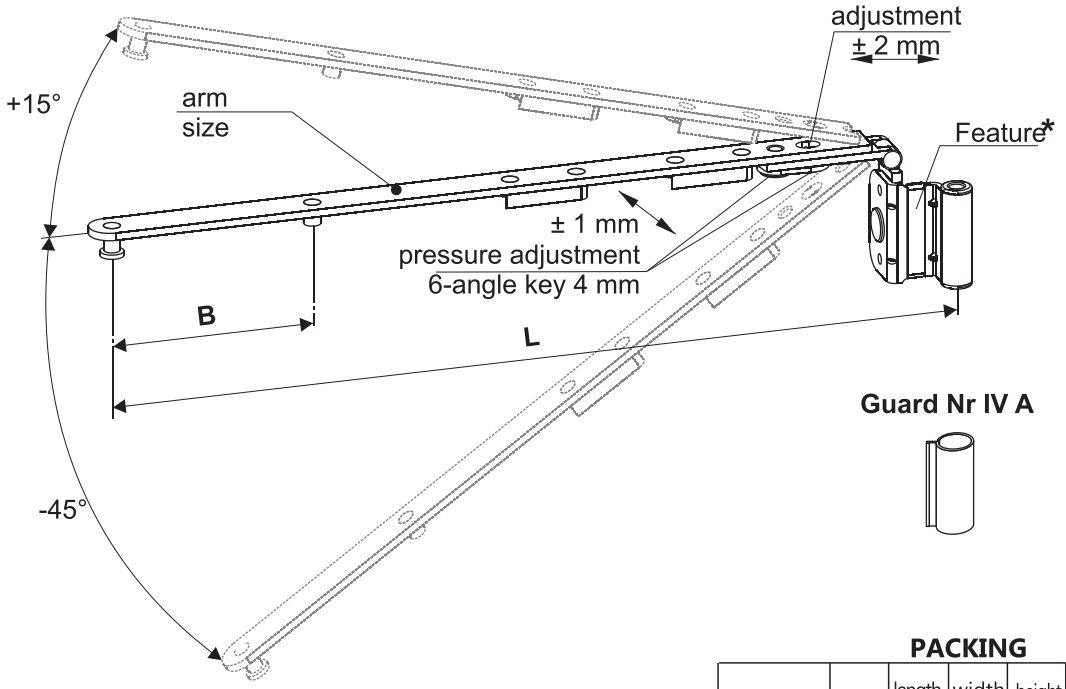

Guard Nr IV A

On special order. Deadline to be agreed with company's Sales Department

USE:
Subassembly fitted in the upper part of the frame corner. When combined with the stay it enables tilting window sashes in trapezoid windows **RU** (Tw). Works with upper hinge bracket (**TwO**) May be used as a left or right arm (change by turning of the bearing * and driving in a stud).

IMPORTANT:
guard should be fitted before placing the arm into upper hinge bracket.

PACKING

Subassembly		length [mm]	width [mm]	height [mm]	pcs/ box	box weight [kg]
TwO T 9/1	box	380	85	50	10	2,00
TwO T 13/1	pallet	1200	800			
TwO T 9/2	box	470	85	50	10	2,45
TwO T 13/2	pallet	1200	800			
TwO T 9/3	box	660	85	50	10	3,00
TwO T 13/3	pallet	1200	800			
TwO T 13/21/1	box	380	85	50	10	2,10
	pallet	1200	800			
TwO T 13/21/2	box	470	85	50	10	2,55
	pallet	1200	800			
TwO T 13/21/3	box	660	85	50	10	3,10
	pallet	1200	800			
TwO T 14/1	box	380	85	50	10	2,00
	pallet	1200	800			
TwO T 14/2	box	470	85	50	10	2,45
	pallet	1200	800			
TwO T 14/3	box	660	85	50	10	3,00
	pallet	1200	800			

Stay T

Subassembly	*Catalogue No*	*Scope of use SwD*	*L*	*W*
Stay 1/T	**037-002**	290-510	350	-
Stay 2/T	**037-003**	511-760	600	-
Stay 2A/T	**037-006**	580-830	670	-
Stay 2C/T	**037-007**	650-830	670	381
Stay 3/T	**037-004**	821-1000	840	536
Stay 4/T	**037-005**	951-1200	1040	536

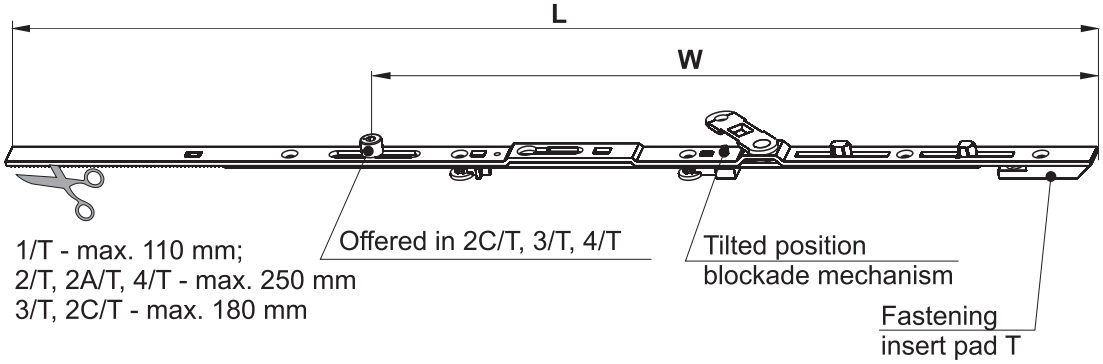

Subassembly	*Stay arm T*			
		TwO 9	*TwO 13*	*S5*
Stay 1/T	Stay arm 1/T	**037-014**	**037-017**	**037-011**
Stay 2/T Stay 2A/T Stay 2C/T	Stay arm 2/T	**037-015**	**037-018**	**037-012**
Stay 3/T Stay 4/T	Stay arm 3/T	**037-016**	**037-020**	**037-013**

On special order. Deadline to be agreed with the company's Sales Department.

USE:
In sashes of trapezoid windows **RU** (Dr and Tw) as a subassembly enabling locking in the upper part of the window. When combined with stay arm it enables turning and tilting window sashes. Equipped with blockade eliminating possibility of hardware displacement from tilted into turned position of the sash.
NOTE:
Fastening insert pad required(**T**) catalogue No **037-026**.

PACKING

Subassembly		length [mm]	width [mm]	height [mm]	pcs/ box	box weight [kg]
1T	box	380	85	50	10	1,75
	pallet	1200	800			
2T	box	660	85	50	10	2,90
	pallet	1200	800			
2A/T	box	800	85	50	10	3,25
	pallet	1200	800			
2C/T	box	800	85	50	10	3,20
	pallet	1200	800			
3T	box	920	85	50	10	4,20
	pallet	1200	800			
4T	box	1100	85	50	10	5,20
	pallet	1200	800			

Stay arm Dr / T

Subassembly	*Catalogue No*	*Scope of use SwD*	*L*	*B*	*C*	*feature*
RR 1	**037-011**	400 - 510	236	65	24,5	11
RR 2	**037-012**	511 - 830	321	80	24,5	
RR 3	**037-013**	821 - 1450	461	120	24,5	

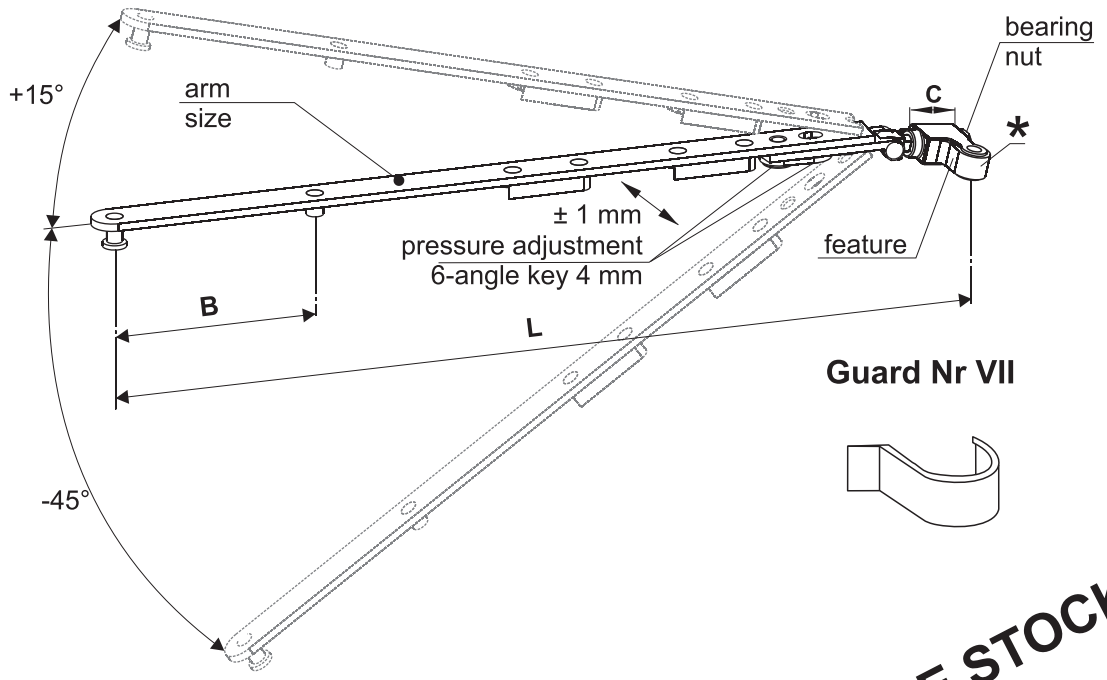

Guard Nr VII

WHILE THE STOCK LASTS !!!

On special order. Deadline to be agreed with the company's Sales Department.

USE:
Subassembly fitted in the upper part of frame corner.
When combined with stay it enables tilting window sashes in trapezoid windows **RU** (Dr) with notch clearance min. 12mm.
May be used as a left or right arm (change by turning the bearing *). May be used as a left or right arm by unscrewing turning the bearing and screwing in the bearing nut.

NOTE:
guard should be fitted before placing the arm into upper hinge bracket.

PACKING

Subassembly		length [mm]	width [mm]	height [mm]	pcs/ box	box weight [kg]
Dr T/1	box	380	85	50	10	1,65
	pallet	1200	800			
Dr T/2	box	470	85	50	10	2,10
	pallet	1200	800			
Dr T/3	box	660	85	50	10	2,68
	pallet	1200	800			

Stay arm S5 T

Size	Catalogue No	Scope of use SwD	L	B	feature
1	**010-004**	400-510	244	65	Dr12/18
2	**010-005**	511-830	329	80	
3	**010-006**	821-1450	469	120	

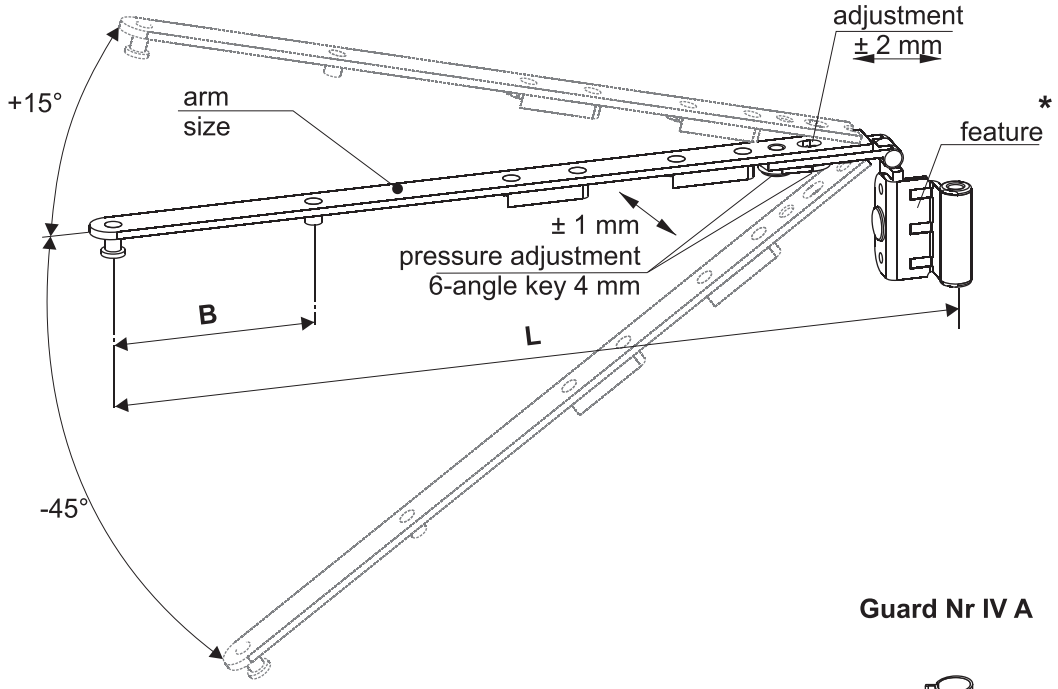

Guard Nr IV A

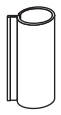

On special order. Deadline to be agreed with the company's Sales Department.

USE:
Subassembly fitted in the upper part of frame corner. When combined with the stay it enables tilting window sashes in trapezoid windows **RU** (Dr) with notch clearance min. 12mm. May be used as left or right arm (change by turning the bearing * and driving in a stud).

NOTE:
guard should be fitted before placing the arm into upper hinge bracket.

PACKING

Subassembly		length [mm]	width [mm]	height [mm]	pcs/ box	box weight [kg]
S5 T/1	box	380	85	50	10	2,00
	pallet	1200	800			
S5 T/2	box	470	85	50	10	2,45
	pallet	1200	800			
S5 T/3	box	660	85	50	10	3,00
	pallet	1200	800			

GENERAL INFORMATION

Peripheral hardware KARO SUW is designed to enable closing, tilting and sliding of window sashes parallelly to the frame surface in **wooden and PCV-U windows**.
Operating functions are performed with the handle.

Technical data:

Groove (hardware) width	16 mm
Distance from handle axis to front	15/7,5/25 mm
Deadbolt height from front	8/9,5 mm
Deadbolt throw	2 x 17 mm
Spacing of holes for screws in the handle	43 mm
Notch clearance	min. 12 mm
Max sash weight	130 kg

Scope of use. KARO SUW 130 Hardware

Sash width in hardware notch	**Sw**	640 - 850 mm
		851 - 1100 mm
		1101 - 1350 mm
		1351 - 1600 mm
Sash height in hardware notch	**Hw**	750 - 980 mm
		981 - 1320 mm
		1321 - 1680 mm
		1681 - 2040 mm
		2041 - 2400 mm

Hardware components:

G1 Basic set (runners) left or right
G2 Set of guide bars (rails)
G3 Additional set of the guide bar (for Sw >1200 mm)
G4 Scissors set (stay)
G5 Handle
G6 Peripheral hardware „ROMB" in accordance with „ROMB" catalogue

Left version

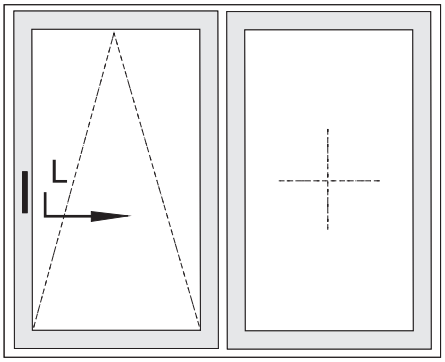

Right version

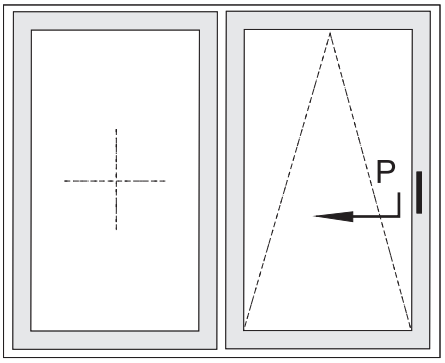

NOTE:
Dependance Hw : Sw < 2,5:1 should be observed

KARO SUW 130

Assembling of hardware elements, left sash,
wooden and PVC-U windows

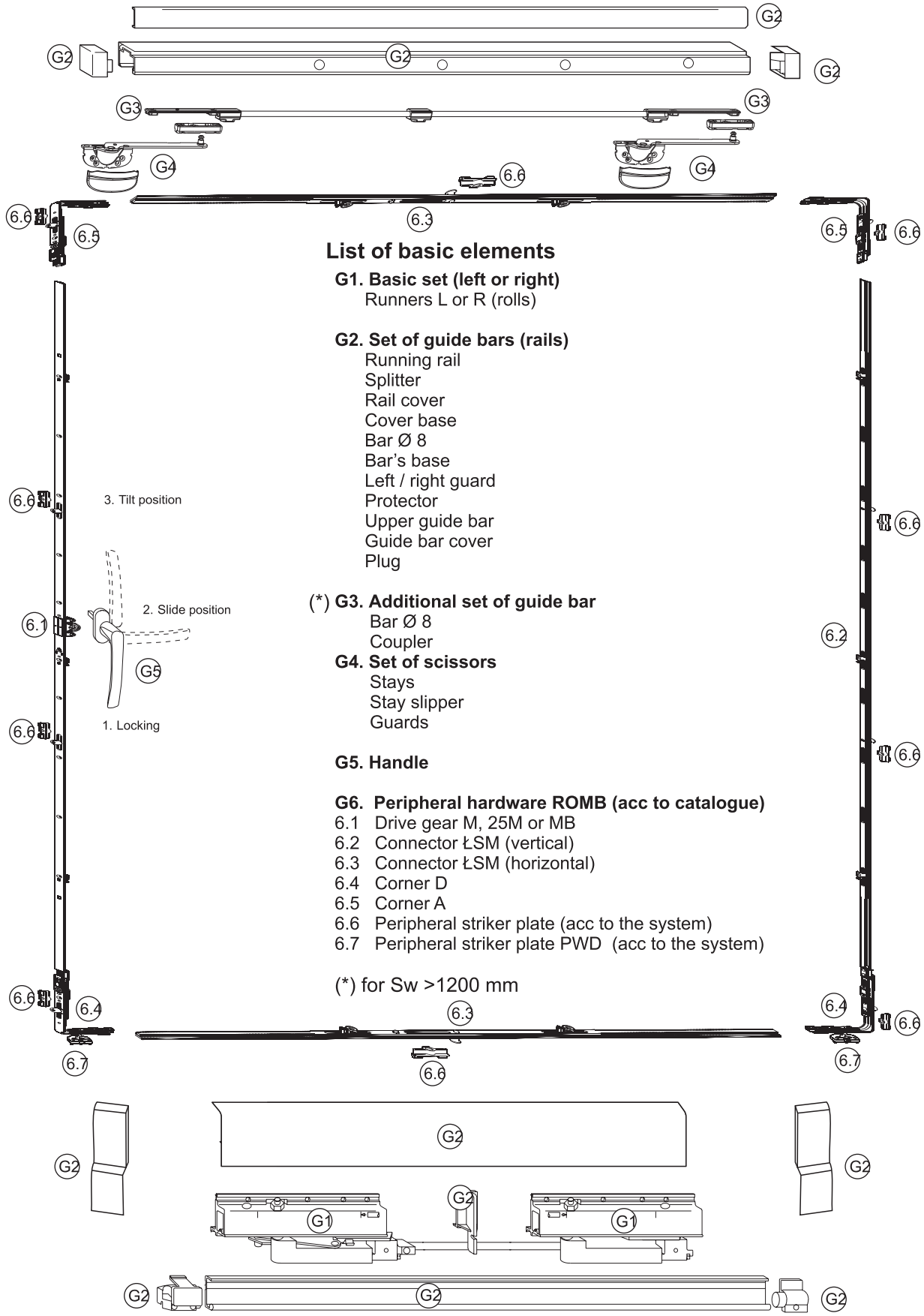

List of basic elements

G1. Basic set (left or right)
Runners L or R (rolls)

G2. Set of guide bars (rails)
Running rail
Splitter
Rail cover
Cover base
Bar Ø 8
Bar's base
Left / right guard
Protector
Upper guide bar
Guide bar cover
Plug

(*) **G3. Additional set of guide bar**
Bar Ø 8
Coupler

G4. Set of scissors
Stays
Stay slipper
Guards

G5. Handle

G6. Peripheral hardware ROMB (acc to catalogue)
6.1 Drive gear M, 25M or MB
6.2 Connector ŁSM (vertical)
6.3 Connector ŁSM (horizontal)
6.4 Corner D
6.5 Corner A
6.6 Peripheral striker plate (acc to the system)
6.7 Peripheral striker plate PWD (acc to the system)

(*) for Sw >1200 mm

PERIPHERAL HARDWARE KARO SUW 130
for tilt / slide windows and doors

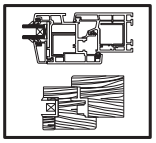

KARO SUW 130 / Scope of use Sw 640-850				
Code	List of elements	Catalogue No	Colour	Comments
G1	Basic set (runners)	200-001		left
		200-002		right
G2	Set of guide bars (rails)	200-003	silver	L-1960
		200-004	brown	L-1960
		200-005	white	L-1960
G3	Additional set of the guide bar	-		
G4	Scissors (stays)	200-006		
	Set of guards	200-007	silver	
		200-008	brown	
		200-009	white	
G5	Handle	200-010	silver	
		200-011	brown	
		200-012	white	
G6	Peripheral hardware ROMB - acc. to separate assembling guidelines			

KARO SUW 130 / Scope of use Sw 851-1100				
Code	List of elements	Catalogue No	Colour	Comments
G1	Basic set (runners)	200-001		left
		200-002		right
G2	Set of guide bars (rails)	200-016	silver	L-2460
		200-017	brown	L-2460
		200-018	white	L-2460
G3	Additional set of the guide bar	-		
G4	Scissors (stays)	200-006		
	Set of guards	200-007	silver	
		200-008	brown	
		200-009	white	
G5	Handle	200-010	silver	
		200-011	brown	
		200-012	white	
G6	Peripheral hardware ROMB - acc. to separate assembling guidelines			

Table 1

Width scope Sw (notch dimensions)	Connector ŁSM pcs 2 (scope of use)	6.3	6.6 pcs
640 - 850	601 - 960	ŁSM1	1(2)
851 - 1100	601 - 960	ŁSM1	1(2)
	961 - 1320	ŁSM2	

Table 2

6.1	Drive gear M pcs 1 (scope of use)	6.6 pcs
M1A	750 - 980	2
M2	981- 1320	3
M3	1321-1680	3
M4	1681-2040	4
M5	2041-2400	4

Table 3

6.2	Connector ŁSM pcs 1 (scope of use)	6.6 pcs
ŁSM1	601 - 960	2
ŁSM2	961-1320	3
ŁSM3	1321-1680	3
ŁSM4	1681-2040	4
ŁSM5	2041-2400	4

G6 Elements of ROMB hardware:

6.1 Drive gear M(*) — acc to table 1 pc
6.2 Connector ŁSM — acc to table 1 pc
6.3 Connector ŁSM — acc to table 2 pcs
6.4 Corner D — 2 pcs
6.5 Corner A — 2 pcs
6.6 Peripheral hardware (system) — acc to table
6.7 PWD striker plate (left for right sash, right for left sash), (for Dr striker plate UD) — 2 pcs

(*) depends on the type of drive gear (ROMB catalogue)

PERIPHERAL HARDWARE KARO SUW 130
for tilt / slide windows and doors

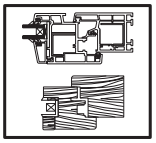

KARO SUW 130 / Scope of use Sw 1101-1350				
Code	List of elements	Catalogue No	Colour	Comments
G1	Basic set (runners)	200-001		left
		200-002		right
G2	Set of guide bars (rails)	200-019	silver	L-2960
		200-020	brown	L-2960
		200-021	white	L-2960
G3	Additional set of the guide bar	200-022		>1200
	Bar ø 8	035-020		L-2000
G4	Scissors (stays)	200-006		
	Set of guards	200-007	silver	
		200-008	brown	
		200-009	white	
G5	Handle	200-010	silver	
		200-011	brown	
		200-012	white	
G6	Peripheral hardware ROMB acc to separate assembling guidelines			

KARO SUW 130 / Scope of use Sw 1351-1600				
Code	List of elements	Catalogue No	Colour	Comments
G1	Basic set (runners)	200-001		left
		200-002		right
G2	Set of guide bars (rails)	200-023	silver	L-3460
		200-024	brown	L-3460
		200-025	white	L-3460
G3	Additional set of the guide bar	200-022		>1200
	Bar ø 8	035-020		L-2000
G4	Scissors (stays)	200-006		
	Set of guards	200-007	silver	
		200-008	brown	
		200-009	white	
G5	Handle	200-010	silver	
		200-011	brown	
		200-012	white	
G6	Peripheral hardware ROMB acc to separate assembling guidelines			

Table 1

Width scope Sz (notch dimension)	Connector ŁSM pcs 2 (scope of use)	6.3	6.6 pcs
1101 - 1350	961 - 1320	ŁSM2	2
	1321 - 1680	ŁSM3	
1351- 1600	1321 - 1680	ŁSM3	2

Table 2

6.1	Drive gear M pcs 1 (scope of use)	6.6 pcs
M1A	750 - 980	2
M2	981- 1320	3
M3	1321-1680	3
M4	1681-2040	4
M5	2041-2400	4

Table 3

6.2	Connector ŁSM pcs 1 (scope of use)	6.6 pcs
ŁSM1	601 - 960	2
ŁSM2	961-1320	3
ŁSM3	1321-1680	3
ŁSM4	1681-2040	4
ŁSM5	2041-2400	4

G6 Elements of ROMB hardware:

6.1 Drive gear M(*)	acc to table 1 pcs
6.2 Connector ŁSM	acc to table 1 pcs
6.3 Connector ŁSM	acc to table 2 pcs
6.4 Corner D	2 pcs
6.5 Corner A	2 pcs
6.6 Peripheral hardware (system)	acc to table
6.7 PWD striker plate (left for right sash, right for left sash), (for Dr striker plate UD)	2 pcs

(*) depends on the type of drive gear (ROMB catalogue)

PERIPHERAL HARDWARE ROMB TwO-Ł
GENERAL INFORMATION
PVC-U ARCHED WINDOWS

ROMB TwO-Ł PERIPHERAL HARDWARE is designed to enable closing, turning and tilting window sashes in PVC-U arched windows. Operating functions are performed with the handle. All hardware elements are fitted in sash and frame stiles. A characteristic feature of ROMB TwO-Ł hardware is flushing of lower hinge with edges of window sash.
Hardware construction makes it possible to fit the lift with drive gear blockade preventing displacement of the hardware from “turned” position into “tilted” position while the sash is turned.

TECHNICAL DATA:

Max weight of sash	60 kg
Groove (hardware) width	16 mm
Distance from handle axis to front	15 mm (7,5 mm)
Deadbolt height from front	9 mm
Deadbolt throw	2×17 mm
Spacing of holes for screws in the handle	43 mm
Min. notch clearance	min. 12 mm

NOTE:
Dependance **Sw / Hw < 1,5** should be observed

SCOPE OF USE:

Sash width Sw	510 - 600 mm
	601 - 960 mm
	961 - 1250 mm

NOTE:
For the scope **510-640** mm assembling of hardware without connector and glider.

Sash height Hw	550 - 750 mm
	751 - 980 mm
	981 - 1320 mm
	1321 - 1680 mm
	1681 - 2040 mm

NOTE:
For the height **Hw < 720** mm assembling of hardware only with stay **1A**

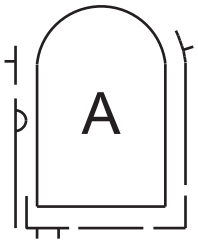

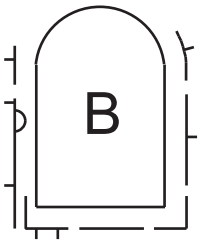

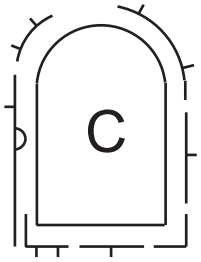

	A	B	C
Sw	510 - 640 mm	510 - 640 mm	641 - 1250 mm
Hw	550 - 720 mm	721 - 2040 mm	721 - 2040 mm

PERIPHERAL HARDWARE ROMB TwO-Ł

ASSEMBLING
PVC-U ARCHED WINDOWS

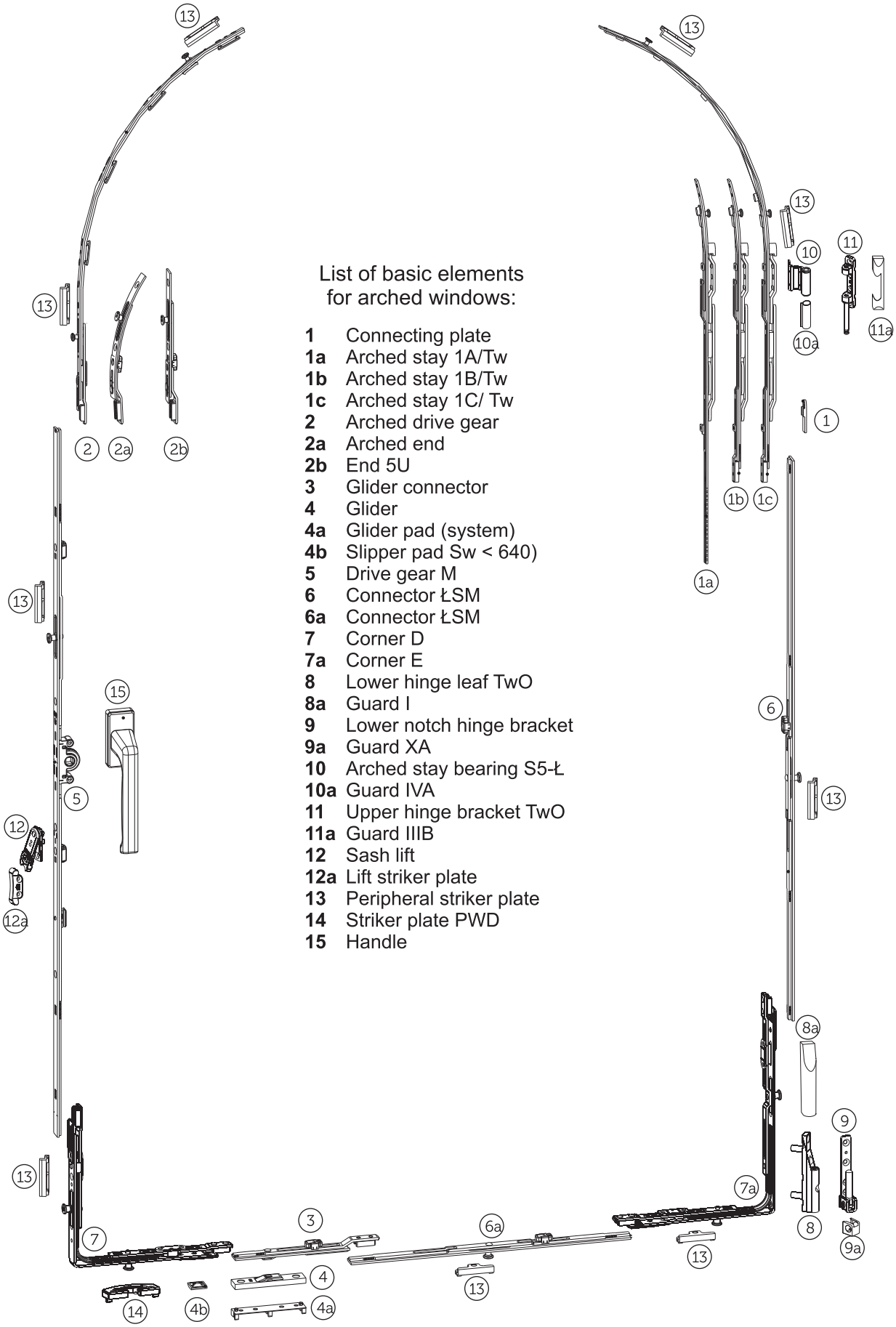

List of basic elements
for arched windows:

1	Connecting plate
1a	Arched stay 1A/Tw
1b	Arched stay 1B/Tw
1c	Arched stay 1C/ Tw
2	Arched drive gear
2a	Arched end
2b	End 5U
3	Glider connector
4	Glider
4a	Glider pad (system)
4b	Slipper pad Sw < 640)
5	Drive gear M
6	Connector ŁSM
6a	Connector ŁSM
7	Corner D
7a	Corner E
8	Lower hinge leaf TwO
8a	Guard I
9	Lower notch hinge bracket
9a	Guard XA
10	Arched stay bearing S5-Ł
10a	Guard IVA
11	Upper hinge bracket TwO
11a	Guard IIIB
12	Sash lift
12a	Lift striker plate
13	Peripheral striker plate
14	Striker plate PWD
15	Handle

PERIPHERAL HARDWARE ROMB TwO-Ł
ASSEMBLING
PVC-U ARCHED WINDOWS

Code	List of elements	Catalogue No	Quantity/ pcs	Comments	(13) Striker plates - pcs
1	Connecting plate	-	1	together 1b/Tw, 1c/Tw	
1a	Arched stay 1A/Tw	036-002	1		1
1b	Arched stay 1B/Tw	036-004			
1c	Arched stay 1C/Tw	036-006		for Sw > 640	2
2	Arched drive gear	204-001	1	for Sw > 911	2
2a	Arched end	204-002			1
2b	End 5U	007-013			
3	Glider connector	204-003	1		
4	Glider	204-004	1	EUROFALZ	
4a	Glider pad (system)		1	for Dr not offered	
4b	Slide pad	036-010		for Sw < 640	
5	Drive gear M0	002-001	1	scope 520 - 750	1
	Drive gear M1A	002-007		751 - 980	
	Drive gear M2	002-003		981 - 1320	
	Drive gear M3	002-004		1321 - 1680	
	Drive gear M4	002-005		1681 - 2040	2
6	Connector ŁSM 0	013-024	1	scope 505 - 600	1
	Connector ŁSM 1	013-025		601 - 960	
	Connector ŁSM 2	013-026		961 - 1320	
	Connector ŁSM 3	013-027		1321 - 1680	
	Connector ŁSM 4	013-028		1681 - 2040	2
6a	Connector ŁSM 0	013-024	1	like item 6	1
	Connector ŁSM 1	013-025			
	Connector ŁSM 2	013-026			
7	Corner D	005-003	1		
7a	Corner E	005-018	1		2
8	Lower hinge leaf TwO	016-025	1	Ø3	
8a	Guard I	acc. to cat.	1		
9	Lower hinge bracket TwO	016-0125	1	Ø3	
9a	Guard XA	acc. to cat.	1		
10	Arched stay bearing TwO-Ł	036-008	1	9/20/Ł	
		036-009		13/20/Ł	
		036-011		13/21/Ł	
		036-012		14/20/Ł	
10a	Guard IVA	acc. to cat.	1		
11	Upper hinge bracket TwO	015-004	1	Ø3	
11a	Guard IIIB	acc. to cat.	1		
12	Sash lift	acc. to cat.	1		
12a	Lift striker plate	acc. to cat.	1	quantity acc. to the table	
13	Peripheral striker plate	acc. to cat.		left	
14	Striker plate PWD	acc. to order	1	right	
15	Handle		1		

NOTE:
for the scope Sw 510-640, assembling without items 3, 4, 4a.
For bearing TwO-Ł 9/20 arched stays should be used like for assembling Dr/S5.

PERIPHERAL HARDWARE ROMB S5-Ł
GENERAL INFORMATION
WOODEN ARCHED WINDOWS

ROMB S5-Ł PERIPHERAL HARDWARE is designed to enable closing, turning and tilting window sashes in wooden arched windows. Operating functions are performed with the handle. All hardware elements are fitted in sash and frame stiles. Characteristic feature of ROMB S5-Ł hardware is flushing the lower hinge with edges of window sash.
Construction of hardware enables fitting the lift with drive gear blockade preventing hardware displacement from "turned" position into "tilted" position while the sash is turned.

TECHNICAL DATA:

Max weight of sash	60 kg
Groove (hardware) width	16 mm
Distance from handle axis to front	15 mm
Deadbolt height from front	8 mm
Deadbolt throw	2×17 mm
Spacing of holes for screws in the handle	43 mm
Min notch clearance	min. 12 mm

NOTE:
Dependance **Sw / Hw < 1,5** should be observed

SCOPE OF USE:

Sash width Sw	510 - 600 mm
	601 - 960 mm
	961 - 1250 mm

NOTE:
For the scope **510-640** mm hardware should be assembled without connector and glider.

Sash height Hw	550 - 720 mm
	721 - 900 mm
	901 - 1080 mm
	1081 - 1330 mm
	1331 - 1580 mm
	1581 - 1830 mm
	1831 - 2040 mm

NOTE:
For the height **Hw < 720** mm hardware should be assembled only with stay **1A**

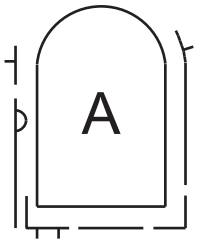

Sw 510 - 640 mm
Hw 550 - 720 mm

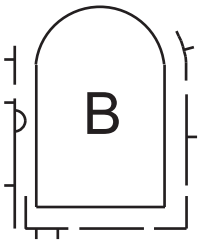

510 - 640 mm
721 - 2040 mm

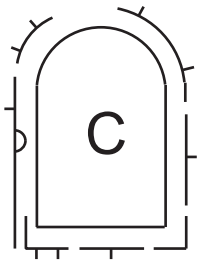

641 - 1250 mm
721 - 2040 mm

PERIPHERAL HARDWARE ROMB S5-Ł

ASSEMBLING
WOODEN ARCHED WINDOWS

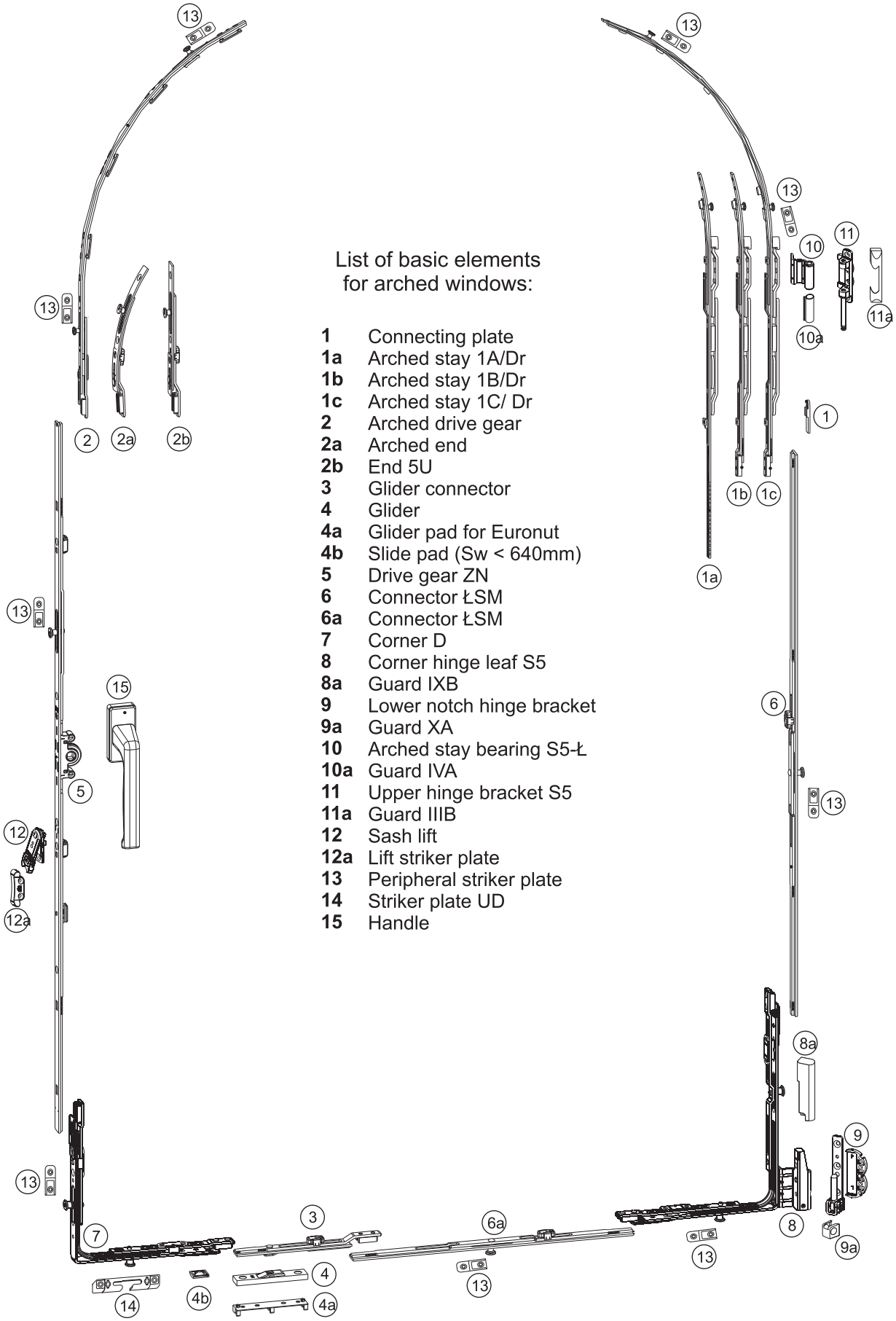

List of basic elements
for arched windows:

1	Connecting plate
1a	Arched stay 1A/Dr
1b	Arched stay 1B/Dr
1c	Arched stay 1C/ Dr
2	Arched drive gear
2a	Arched end
2b	End 5U
3	Glider connector
4	Glider
4a	Glider pad for Euronut
4b	Slide pad (Sw < 640mm)
5	Drive gear ZN
6	Connector ŁSM
6a	Connector ŁSM
7	Corner D
8	Corner hinge leaf S5
8a	Guard IXB
9	Lower notch hinge bracket
9a	Guard XA
10	Arched stay bearing S5-Ł
10a	Guard IVA
11	Upper hinge bracket S5
11a	Guard IIIB
12	Sash lift
12a	Lift striker plate
13	Peripheral striker plate
14	Striker plate UD
15	Handle

PERIPHERAL HARDWARE ROMB S5-Ł
ASSEMBLING
WOODEN ARCHED WINDOWS

Code	List of elements	Catalogue No	Quantity/ pcs	Comments	(13) Striker plate - pcs
1	Connecting plate	-	1	together 1b/Dr, 1c/Dr	
1a	Arched stay 1A/Dr	036-001	1		1
1b	Arched stay 1B/Dr	036-003			
1c	Arched stay 1C/ Dr	036-005		for Sw > 640	2
2	Arched drive gear	204-001	1	for Sw > 911	2
2a	Arched end	204-002			1
2b	End 5U	007-013			
3	Glider connector	204-003	1		
4	Glider	204-004	1	Eurofalz	
4a	Glider pad		1	only for Euronut	
4b	Slide pad	036-010		for Sw < 640	
5	Drive gear ZN 0	001-050	1	scope 520 - 540	-
	Drive gear ZN 1	001-051		541 - 720	1
	Drive gear ZN 2	001-043		721 - 900	
	Drive gear ZN 3	001-044		901 - 1080	
	Drive gear ZN 4	001-045		1081 - 1330	
	Drive gear ZN 5	001-046		1331 - 1580	
	Drive gear ZN 6	001-047		1581 - 1830	2
	Drive gear ZN 7	001-048		1831 - 2080	
6	Connector ŁSM 0	013-024	1	scope 505 - 600	1
	Connector ŁSM 1	013-025		601 - 960	
	Connector ŁSM 2	013-026		961 - 1320	
	Connector ŁSM 3	013-027		1321 - 1680	
	Connector ŁSM 4	013-028		1681 - 2040	2
6a	Connector ŁSM 0	013-024	1	like in item 6	1
	Connector ŁSM 1	013-025			
	Connector ŁSM 2	013-026			
7	Corner D	005-003	1		1
8	Corner hinge leaf S5	016-027	1	left	2
		016-028	1	right	
8a	Guard IXB	acc. to cat.	1	left	
		acc. to cat.	1	right	
9	Lower hinge bracket S5	016-011	1		
9a	Guard XA	acc. to cat.	1		
10	Arched stay bearing S5-Ł	035-007	1		
10a	Guard IVA	acc. to cat.	1		
11	Upper hinge bracket S5	015-003	1		
11a	Guard IIIB	acc. to cat.	1		
12	Sash lift	032-001			
12a	Lift striker plate	acc. to cat.	1		
13	Peripheral striker plate	acc. to cat.		quantity acc. to the table	
14	Striker plate UD	acc. to cat.	1	left	
				right	
15	Handle	acc. to order	1		

NOTE:
In case of replacing drive gear ZN by drive gear M
assemble in accordance with assembling guidelines TwO-Ł.
For the scope Sw 510-640 assemble without items 3, 4, 4a.

PERIPHERAL HARDWARE ROMB S5-Ł
GENERAL INFORMATION
WOODEN ARCHED WINDOWS

ROMB S5-Ł PERIPHERAL HARDWARE is designed to enable closing, turning and tilting window sashes in timber arched windows. Operating functions are performed with the handle. All hardware elements are fitted in sash and frame stiles. Characteristic feature of ROMB S5-Ł hardware is flushing lower hinge with edges of the window sash.
Hardware construction enables fitting the lift with drive gear blockade preventing displacing of the hardware from “turned” position into tilted position when the sash is turned.

TECHNICAL DATA:

Max weight of sash	60 kg
Groove (hardware) width	16 mm
Distance from handle axis to front	15 mm
Deadbolt height from front	8 mm
Deadbolt throw	2×17 mm
Spacing oh holes for screws in the handle	43 mm
Min. notch clearance	12 mm

NOTE:
Dependance **Sw / Hw < 1,5** should be observed

SCOPE OF USE:

Sash width Sw	510 - 600 mm
	601 - 960 mm
	961 - 1250 mm

NOTE:
For the scope **510-640** mm hardware should be assembled without connector and glider items 3, 4, 4a.

Sash height Hw	720 - 900 mm
	901 - 1080 mm
	1081 - 1330 mm
	1331 - 1580 mm
	1581 - 1830 mm
	1831 - 2080 mm
	2081 - 2330 mm

NOTE:
For the height **Hw < 880** mm hardware should be assembled only with stay **1A**

Every case of hardware selection for presented window version, should be viewed separately depending on the arch size based on dimensions Hw1/Hw as well as the width Sw.

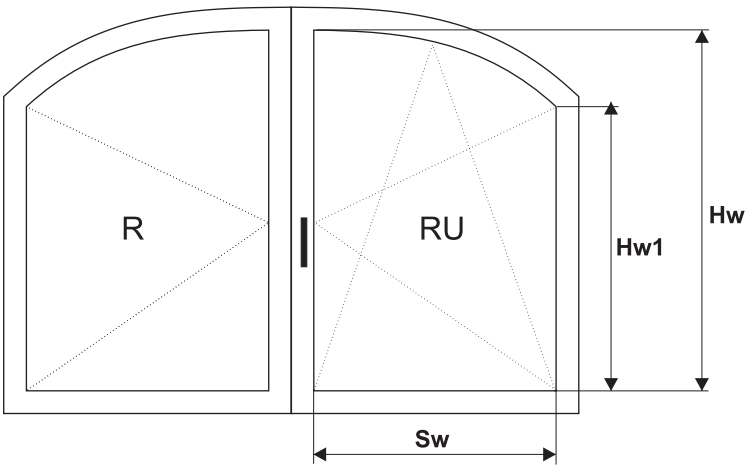

Wooden arched window with movable post.

PERIPHERAL HARDWARE ROMB S5-Ł

ASSEMBLING
WOODEN ARCHED WINDOWS

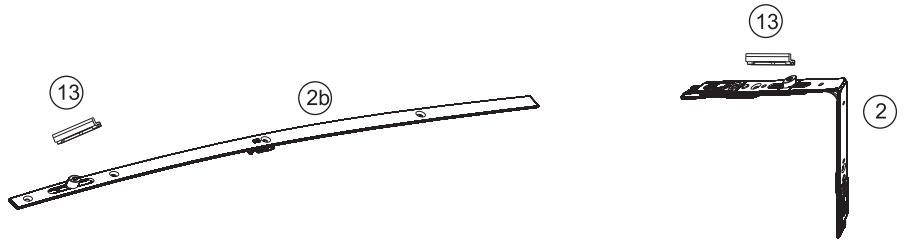

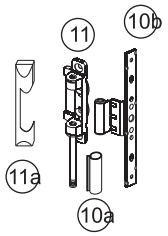

Window with movable post - sash R (passive)

Code	List of elements	Catalogue No / cylinder deadbolt	Quantity/ pcs	Comments	13 Striker plate pcs.
2	Corner T	037-027	1		1
2b	Corner 2G	008-015	2	1G < 600	2
	extension 1G	008-017		2G < 960	
5a	Drive gear BZ 2	012-014	1	721 - 900	
	Drive gear BZ 3	012-015		901 - 1080	
	Drive gear BZ 4	012-016		1081 - 1330	
	Drive gear BZ 5	012-017		1331 - 1580	
	Drive gear BZ 6	012-018		1581 - 1830	
	Drive gear BZ 7	012-019		1831 - 2080	
	Drive gear BZ 8	012-020		2081 - 2330	
7	Corner BD	005-017	1		1
8	Lower hinge leaf S5	016-005	1	left	
		016-006	1	right	
8a	Guard IXB	acc. to cat.	1	left	
		acc. to cat.	1	right	
9	Lower hinge bracket S5	016-011	1		
9a	Guard XA	acc. to cat.	1		
10b	Middle hinge leaf S5	019-009	1		
10a	Guard IVA	acc. to cat.	1		
11	Upper hinge bracket S5	015-003	1		
11a	Guard IIIB	acc. to cat.	1		
13	Peripheral striker plate	acc. to cat.	1		
14	Striker plate UD	acc. to cat.	1	left	
				right	
15	Handle	acc. to order	1		

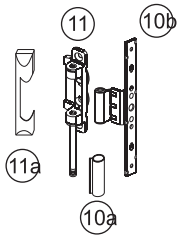

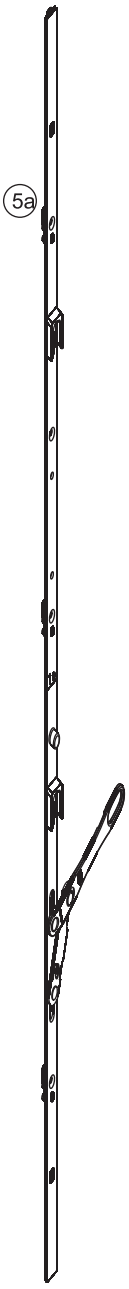

NOTE:
In case of replacing **BZ** by drive gear **BM**
assemble in accordance with **TwO-Ł**.
In case of performing hardware channel on the girth of the sash,
item **10b** should be fitted together with item **8b**.

for the scope **Hw1> 1000**, item **11, 11a, 10a, 10b** pcs. **2**.

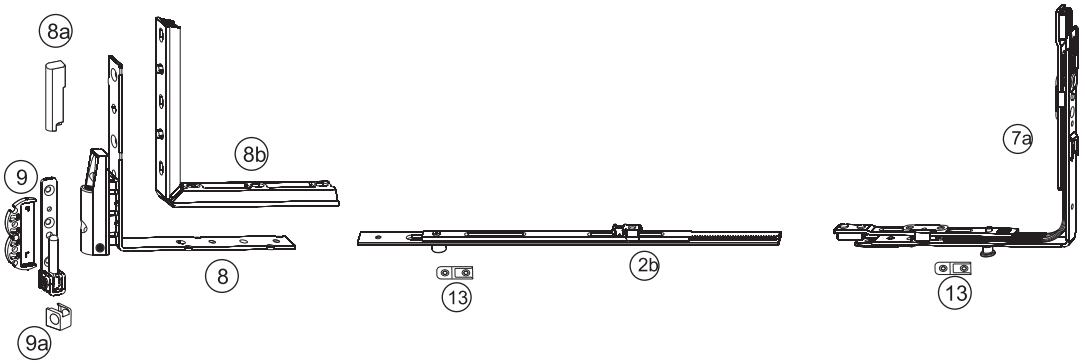

PERIPHERAL HARDWARE ROMB S5-Ł
ASSEMBLING
WOODEN ARCHED WINDOWS

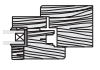

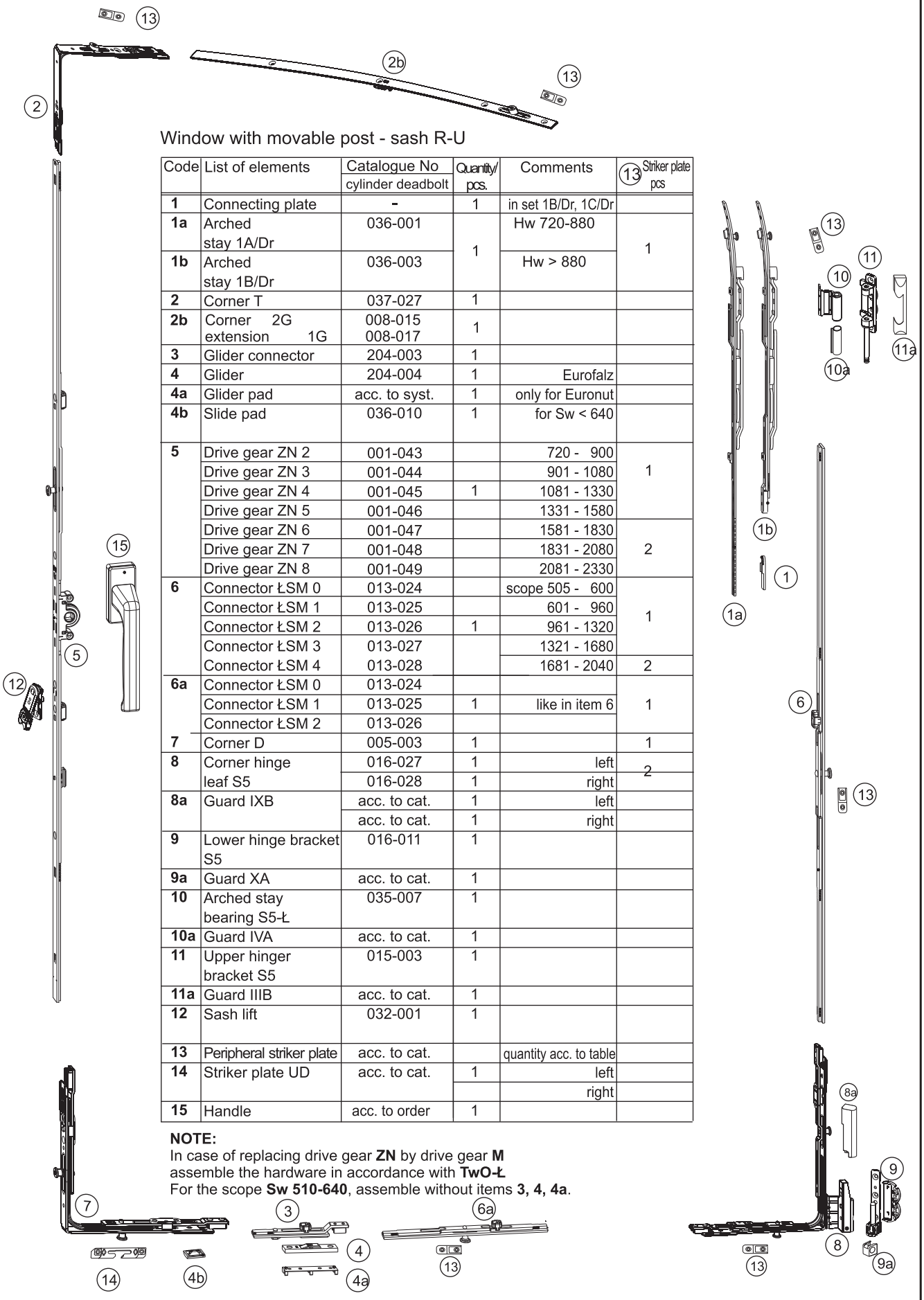

Window with movable post - sash R-U

Code	List of elements	Catalogue No / cylinder deadbolt	Quantity/ pcs.	Comments	13 Striker plate pcs
1	Connecting plate	-	1	in set 1B/Dr, 1C/Dr	
1a	Arched stay 1A/Dr	036-001	1	Hw 720-880	1
1b	Arched stay 1B/Dr	036-003		Hw > 880	
2	Corner T	037-027	1		
2b	Corner extension 2G 1G	008-015 008-017	1		
3	Glider connector	204-003	1		
4	Glider	204-004	1	Eurofalz	
4a	Glider pad	acc. to syst.	1	only for Euronut	
4b	Slide pad	036-010	1	for Sw < 640	
5	Drive gear ZN 2	001-043		720 - 900	1
	Drive gear ZN 3	001-044		901 - 1080	
	Drive gear ZN 4	001-045	1	1081 - 1330	
	Drive gear ZN 5	001-046		1331 - 1580	
	Drive gear ZN 6	001-047		1581 - 1830	2
	Drive gear ZN 7	001-048		1831 - 2080	
	Drive gear ZN 8	001-049		2081 - 2330	
6	Connector ŁSM 0	013-024		scope 505 - 600	1
	Connector ŁSM 1	013-025		601 - 960	
	Connector ŁSM 2	013-026	1	961 - 1320	
	Connector ŁSM 3	013-027		1321 - 1680	
	Connector ŁSM 4	013-028		1681 - 2040	2
6a	Connector ŁSM 0	013-024			1
	Connector ŁSM 1	013-025	1	like in item 6	
	Connector ŁSM 2	013-026			
7	Corner D	005-003	1		1
8	Corner hinge leaf S5	016-027	1	left	2
		016-028	1	right	
8a	Guard IXB	acc. to cat.	1	left	
		acc. to cat.	1	right	
9	Lower hinge bracket S5	016-011	1		
9a	Guard XA	acc. to cat.	1		
10	Arched stay bearing S5-Ł	035-007	1		
10a	Guard IVA	acc. to cat.	1		
11	Upper hinger bracket S5	015-003	1		
11a	Guard IIIB	acc. to cat.	1		
12	Sash lift	032-001	1		
13	Peripheral striker plate	acc. to cat.		quantity acc. to table	
14	Striker plate UD	acc. to cat.	1	left	
				right	
15	Handle	acc. to order	1		

NOTE:
In case of replacing drive gear **ZN** by drive gear **M**
assemble the hardware in accordance with **TwO-Ł**
For the scope **Sw 510-640**, assemble without items **3, 4, 4a**.

PERIPHERAL HARDWARE ROMB TwO-Ł
GENERAL INFORMATION
PVC-U ARCHED WINDOWS

ROMB TwO-Ł PERIPHERAL HARDWARE is designed to enable closing, turning and tilting window sashes in PVC-U arched windows. Operating functions are performed with the handle. All hardware elements are fitted in sash and frame stiles. Characteristic feature of ROMB TwO-Ł hardware is flushing the lower hinge with the edges of window sash.
Hardware construction enables fitting the lift with drive gear blockade preventing displacing the hardware from “turned” position into “tilted” position when the sash is turned.

TECHNICAL DATA:

Max weight of sash	60 kg
Groove (hardware) width	16 mm
Distance from hardware axis to front	15 mm (7,5 mm)
Deadbolt height from front	9 mm
Deadbolt throw	2×17 mm
Spacing of holes for screws in the handle	43 mm
Min. notch clearance	12 mm

NOTE:
Dependancy **Sw / Hw < 1,5** should be observed

SCOPE OF USE:

Sash width Sw	510 - 600 mm
	601 - 960 mm
	961 - 1250 mm

NOTE:
For the scope **510-640** mm assemble the hardware without connector and glider, items 3, 4, 4a.

Sash height Hw	720 - 750 mm
	751 - 980 mm
	981 - 1320 mm
	1321 - 1680 mm
	1681 - 2040 mm
	2041 - 2400 mm

NOTE:
For the height **Hw < 880** mm assemble the hardware only with stay **1A**

Each case of hardware selection for presented window version, should be viewed separately depending on the arch size based on dimensions Hw1/Hw as well as width Sw.

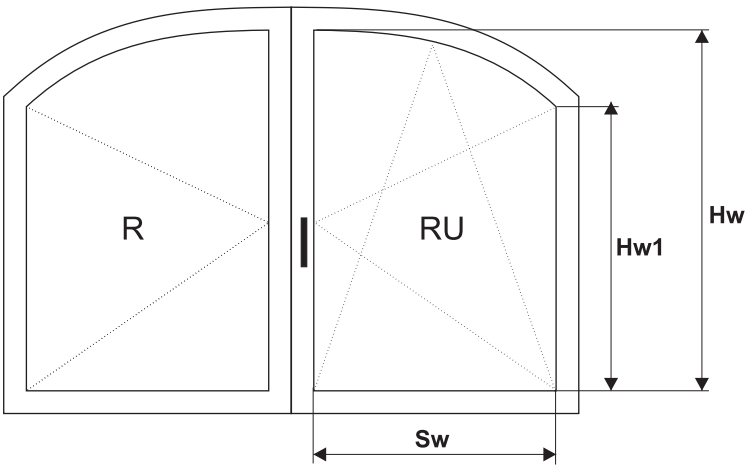

PVC-U arched windows with movable post.

PERIPHERAL HARDWARE ROMB TwO-Ł
ASSEMBLING
PVC-U ARCHED WINDOWS

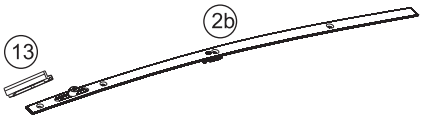

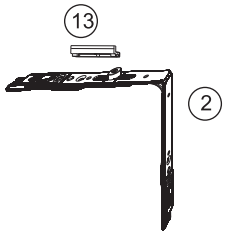

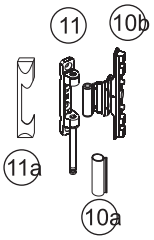

Window with movable post - sash R (passive)

Code	List of elements	Catalogue No / cylinder deadbolt	Quantity/ pcs.	Comments	13 striker plate pcs
2	Corner T	037-027	1		1
2b	Corner 2G	008-015	2	1G < 600	
	extension 1G	008-017		2G < 960	2
		-			
5a	Drive gear BM2	012-010	1	960 - 1320	
	Drive gear BM3	012-011		1321 - 1680	
	Drive gear BM4	012-012		1681 - 2040	
	Drive gear BM5	012-013		2041 - 2400	
7b	Corner BD	005-017	1		1
8	Lower hinge leaf TwO	016-023	1	Ø3	
8a	Guard I	acc. to cat.	1		
9	Lower notch hinge bracket	016-025	1	Ø3	
9a	Guard XA	acc. to cat.	1		
10b	Notch hinge	019-005	1	9/B	
	leaf	019-006		13/B	
	TwO/B	019-007		13/21/B	
10a	Guard IVA	acc. to cat.	1	acc. to item 10b	
11	Upper hinge bracket TwO	015-004	1	Ø3	
11a	Guard IIIB	acc. to cat.	1	acc. to item 11	
13	Peripheral striker plate	acc. to cat.	4	quantity acc. to the table	

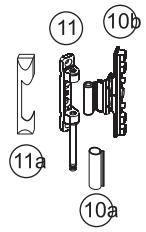

NOTE:
For the scope **Hw1 > 800**, item **10a, 10b, 11, 11a** 2 pcs

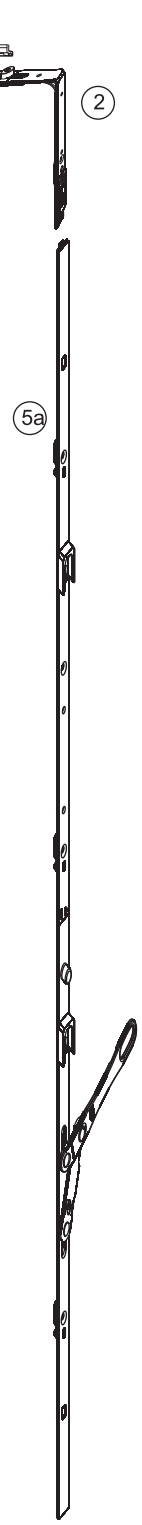

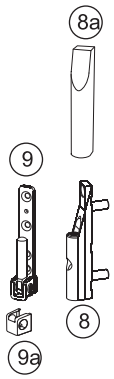

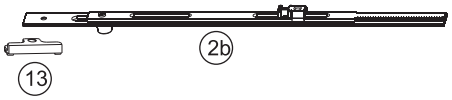

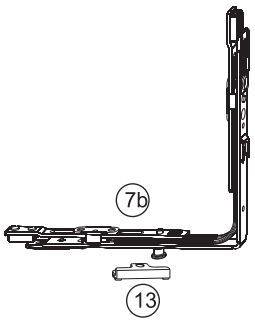

PERIPHERAL HARDWARE ROMB TwO-Ł
ASSEMBLING
PVC-U ARCHED WINDOWS

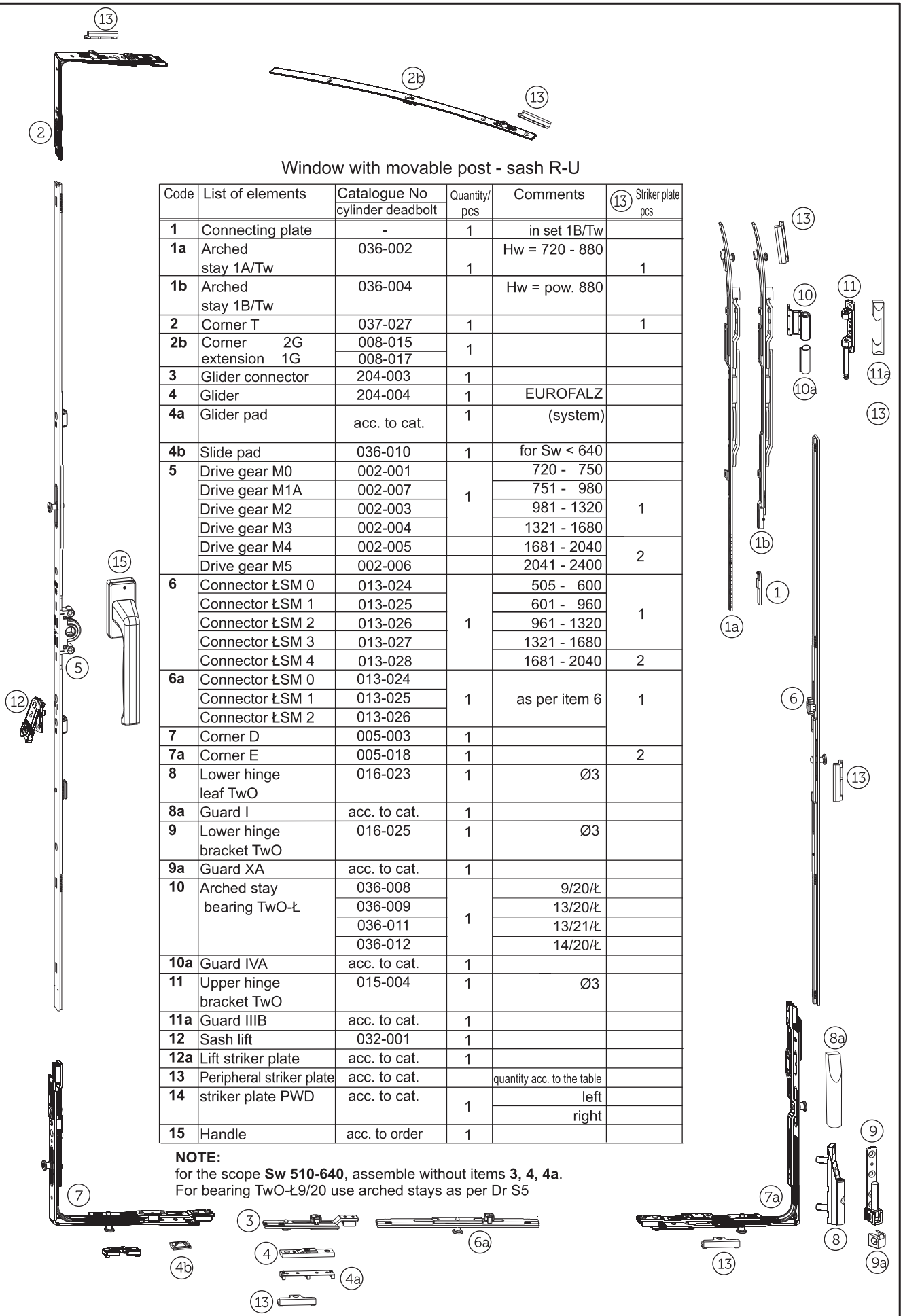

Window with movable post - sash R-U

Code	List of elements	Catalogue No / cylinder deadbolt	Quantity/ pcs	Comments	(13) Striker plate pcs
1	Connecting plate	-	1	in set 1B/Tw	
1a	Arched stay 1A/Tw	036-002	1	Hw = 720 - 880	1
1b	Arched stay 1B/Tw	036-004		Hw = pow. 880	
2	Corner T	037-027	1		1
2b	Corner extension 2G	008-015	1		
	1G	008-017			
3	Glider connector	204-003	1		
4	Glider	204-004	1	EUROFALZ	
4a	Glider pad	acc. to cat.	1	(system)	
4b	Slide pad	036-010	1	for Sw < 640	
5	Drive gear M0	002-001	1	720 - 750	
	Drive gear M1A	002-007		751 - 980	1
	Drive gear M2	002-003		981 - 1320	
	Drive gear M3	002-004		1321 - 1680	
	Drive gear M4	002-005		1681 - 2040	2
	Drive gear M5	002-006		2041 - 2400	
6	Connector ŁSM 0	013-024	1	505 - 600	1
	Connector ŁSM 1	013-025		601 - 960	
	Connector ŁSM 2	013-026		961 - 1320	
	Connector ŁSM 3	013-027		1321 - 1680	
	Connector ŁSM 4	013-028		1681 - 2040	2
6a	Connector ŁSM 0	013-024	1	as per item 6	1
	Connector ŁSM 1	013-025			
	Connector ŁSM 2	013-026			
7	Corner D	005-003	1		
7a	Corner E	005-018	1		2
8	Lower hinge leaf TwO	016-023	1	Ø3	
8a	Guard I	acc. to cat.	1		
9	Lower hinge bracket TwO	016-025	1	Ø3	
9a	Guard XA	acc. to cat.	1		
10	Arched stay bearing TwO-Ł	036-008	1	9/20/Ł	
		036-009		13/20/Ł	
		036-011		13/21/Ł	
		036-012		14/20/Ł	
10a	Guard IVA	acc. to cat.	1		
11	Upper hinge bracket TwO	015-004	1	Ø3	
11a	Guard IIIB	acc. to cat.	1		
12	Sash lift	032-001	1		
12a	Lift striker plate	acc. to cat.	1		
13	Peripheral striker plate	acc. to cat.		quantity acc. to the table	
14	striker plate PWD	acc. to cat.	1	left	
				right	
15	Handle	acc. to order	1		

NOTE:
for the scope **Sw 510-640**, assemble without items **3, 4, 4a**.
For bearing TwO-Ł9/20 use arched stays as per Dr S5

PERIPHERAL HARDWARE ALU KARO
GENERAL INFORMATION
SYSTEM MB-59S

PERIPHERAL HARDWARE ALU KARO is used for closing and turning window sashes in windows **AI**. Operating functions are performed with the handle, depending on the need 4- or 8-position. All hardware elements are fitted into sash and frame stiles.

TECHNICAL DATA:

Max weight of sash	100kg
Groove (hardware) width	16 mm
Distance from handle axis to front	15 mm (7,5 mm)
Deadbolt height from front	8 mm
Deadbolt throw	2×17 mm
Spacing of holes for screws in the handle	43 mm
Notch clearance	min.12 mm

NOTE: dependancy Sw / Hw < 1,5 should be observed

Hardware is equipped with blockade eliminating possibility of handle displacement from sash in tilted position into position “turned” (blockade in stay). Hardware construction enables fitting drive gear blockade preventing hardware displacement from “turned” position into “tilted” position while the sash is turned.
For window sashes with Hw > 750 mm lift with blockade should be used.

USE:
Peripheral hardware **ALU KARO** may be used in aluminium windows: turn / tilt, turn and tilt with hardware groove as for profiles PCV (MB59S, Spectral).

NOTE:
In order to facilitate selecting and assembling **ALU KARO** hardware, it is recommended to use computer programme **MB-CAD** by **ALUPROF S.A.**

Peripheral hardware
ALU KARO

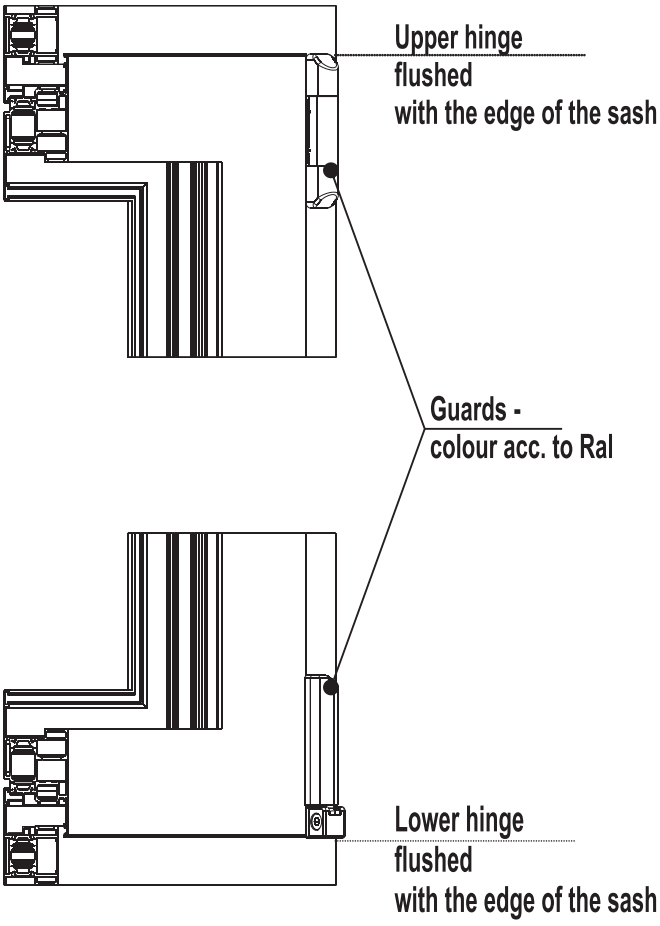

SELECTION OF ALU KARO HARDWARE
FOR TURN WINDOWS R AI
SYSTEM MB-59S

D1 — Sw 831 - 1200, Hw 961 - 1320

○	№	1..
1	002-020 002-003 (*)	1
2	007-001 007-008	1 1
3	019-005 017-003	1 1
4	006-002	2
5	015-004 016-012	2 1
6		1
7		
8		
9	016-015 016-016	

5a	Table 1	2
7a		2 1
8a		1 1
9a		
10		

11	034-010	5
12	032-001 034-007	1 1
12a		

D2 — Sw 1201 - 1450, Hw 961 - 1320

○	№	1..
1	002-020 002-003 (*)	1
2	007-001 007-008	1 1
3	019-005 017-003	1 1
4	006-003	2
5	015-004 016-012	2 1
6		1
7		
8		
9	016-015 016-016	

5a	Table 1	2
7a		2 1
8a		1 1
9a		
10		

11	034-010	5
12	032-001 034-007	1 1
12a		

D3 — Sw 831 - 1200, Hw 1321 - 1680

○	№	1..
1	002-021 002-004 (*)	1
2	007-001 007-008	1 1
3	019-005 017-003	1 1
4	006-002	2
5	015-004 016-012	2 1
6		1
7		
8		
9	016-015 016-016	

5a	Table 1	2
7a		2 1
8a		1 1
9a		
10		

11	034-010	5
12	032-001 034-007	1 1
12a		

D4 — Sw 1201 - 1450, Hw 1321 - 1680

○	№	1..
1	002-021 002-004 (*)	1
2	007-001 007-008	1 1
3	019-005 017-003	1 1
4	006-003	2
5	015-004 016-012	2 1
6		1
7		
8		
9	016-015 016-016	

5a	Table 1	2
7a		2 1
8a		1 1
9a		
10		

11	034-010	5
12	032-001 034-007	1 1
12a		

E1 — Sw 300 - 830, Hw 1681 - 2040

○	№	1..
1	002-022 002-005 (*)	1
2	007-001 007-008	1 1
3	019-005 017-003	1 1
4	-	-
5	015-004 016-012	2 1
6		1
7		
8		
9	016-015 016-016	

5a	Table 1	2
7a		2 1
8a		1 1
9a		
10		

11	034-010	4
12	032-001 034-007	1 1
12a		

E2 — Sw 300 - 830, Hw 2041 - 2400

○	№	1..
1	002-023 002-005 (*)	1
2	007-001 007-008	1 1
3	019-005 017-003	2 1
4	-	-
5	015-004 016-012	3 1
6		1
7		
8		
9	016-015 016-016	

5a	Table 1	3
7a		3 1
8a		1 1
9a		
10		

11	034-010	4
12	032-001 034-007	1 1
12a		

F1 — Sw 831 - 1200, Hw 1681 - 2040

○	№	1..
1	002-022 002-005 (*)	1
2	007-001 007-008	1 1
3	019-005 017-003	1 1
4	006-002	2
5	015-004 016-012	2 1
6		1
7		
8		
9	016-015 016-016	

5a	Table 1	2
7a		2 1
8a		1 1
9a		
10		

11	034-010	6
12	032-001 034-007	1 1
12a		

F2 — Sw 831 - 1200, Hw 2041 - 2400

○	№	1..
1	002-023 002-006 (*)	1
2	007-001 007-008	1 1
3	019-005 017-003	2 1
4	006-002	2
5	015-004 016-012	3 1
6		1
7		
8		
9	016-015 016-016	

5a	Table 1	3
7a		3 1
8a		1 1
9a		
10		

11	034-010	6
12	032-001 034-007	1 1
12a		

(*) for assembling with drive gear (M)

Changeable elements for **Spectral** system.

Table 4

11	027-021
12a	034-008

Table 1

○	№		
	RAL 9016	RAL 8017	RAL 9006
5a	033-018	033-019	033-020
7a	033-011 033-057	033-012 033-058	033-013 033-059
8a			
9a	200-026 034-015 034-016	200-027 034-017 034-018	200-028 034-019 034-020
10			

RAL 9016 - white
RAL 8017 - brown
RAL 9006 - silver

ASSEMBLING WITH DRIVE GEAR 7,5S (S)

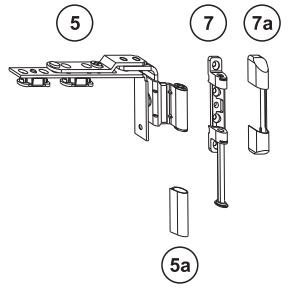

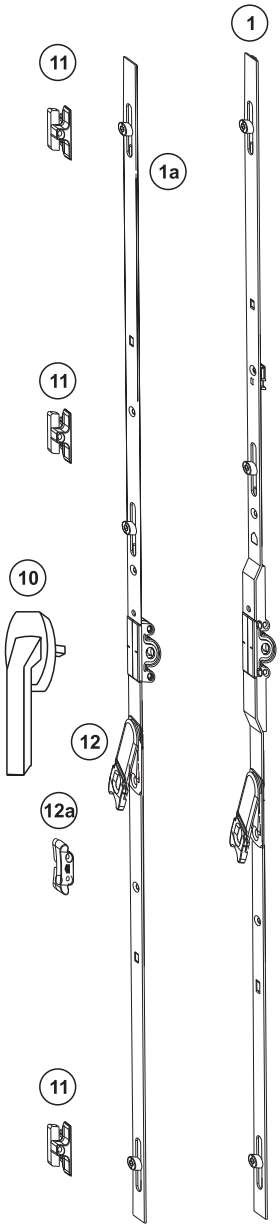

LIST OF BASIC SUBASSEMBLIES (TURN WINDOWS)

1 Drive gear (7,5S)
1a Drive gear S
4 Notch hinge leaf TwO 9/B
5 Corner hinge leaf TwAl 9
5a Bearing guard IVA
7 Upper hinge bracket TwO
7a Bracket guard IIIB
8 Lower hinge bracket
8a Bracket guard XA
9 Lower notch hinge leaf L/P
9a Leaf guard IXA L/P
10 Handle
11 Peripheral striker plate Al
12 Lift with blockade
12a Lift striker plate Al

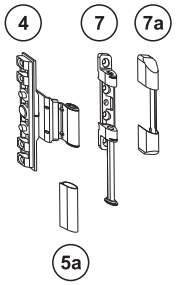

NOTE:
Handle and decorative elements (guards) available in RAL colour palette **Table 1**

Changeable elements for **Spectral** system **Table 4**

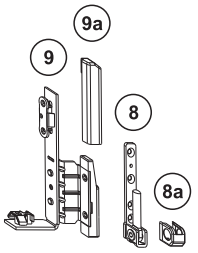

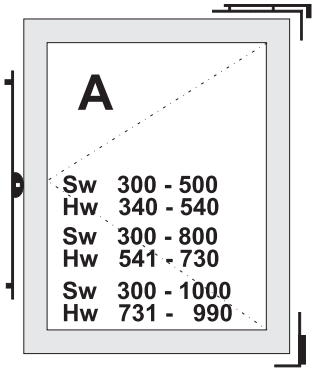

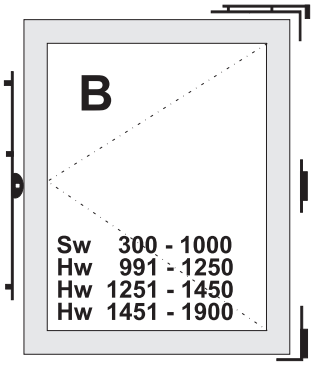

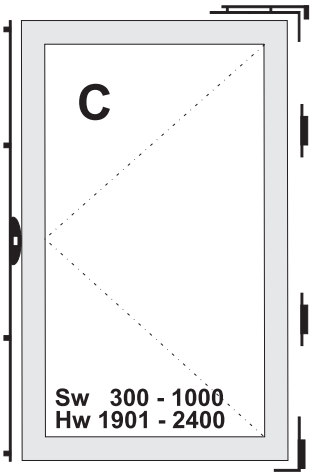

ASSEMBLING WITH DRIVE GEAR 7,5S or (S)

A1
Sw 300 - 500
Hw 340 - 540

○	№	1..
1	004-025 004-002(*)	1 1
1a	- 017-003	- 1
4	015-004	1
5	016-012 016-015	1 1
7	016-016	
8		
9	L P	1
5a	Table 1	1
7a		1 1
8a		1 1
9a		
10		
11	034-010	2
12	- -	- -
12a		

A2
Sw 300 - 800
Hw 541 - 730

○	№	1..
1	004-026 004-003(*)	1 1
1a	- 017-003	- 1
4	015-004	1
5	016-012 016-015	1 1
7	016-016	
8		
9	L P	1
5a	Table 1	1
7a		1 1
8a		1 1
9a		
10		
11	034-010	2
12	- -	- -
12a		

A3
Sw 300 - 1000
Hw 731 - 990

○	№	1..
1	004-027 004-004(*)	1 1
1a	- 017-003	- 1
4	015-004	1
5	016-012 016-015	1 1
7	016-016	
8		
9	L P	1
5a	Table 1	1
7a		1 1
8a		1 1
9a		
10		
11	034-010	2
12	- -	- -
12a		

B1
Sw 300 - 1000
Hw 991 - 1250

○	№	1..
1	004-028 004-009 (*)	1 1
1a	019-005 017-003	1 1
4	015-004	1
5	016-012 016-015	2 1
7	016-016	
8		
9	L P	1
5a	Table 1	2
7a		2 1
8a		1 1
9a		
10		
11	034-010	3
12	- -	- -
12a		

B2
Sw 300 - 1000
Hw 1251 - 1450

○	№	1..
1	004-029 004-010 (*)	1 1
1a	019-005 017-003	1 1
4	015-004	1
5	016-012 016-015	2 1
7	016-016	
8		
9	L P	1
5a	Table 1	2
7a		2 1
8a		1 1
9a		
10		
11	034-010	3
12	- -	- -
12a		

B3
Sw 300 - 1000
Hw 1451 - 1900

○	№	1..
1	004-030 004-011 (*)	1 1
1a	019-005 017-003	1 1
4	015-004	1
5	016-012 016-015	2 1
7	016-016	
8		
9	L P	1
5a	Table 1	2
7a		2 1
8a		1 1
9a		
10		
11	034-010	3
12	- -	- -
12a		

C1
Sw 300 - 1000
Hw 1901 - 2400

○	№	1..
1	004-031 004-012 (*)	1 1
1a	019-005 017-003	1 2
4	015-004	1
5	016-012 016-015	3 1
7	016-016	
8		
9	L P	1
5a	Table 1	1
7a		1 1
8a		1 1
9a		
10		
11	034-010	4
12	032-001 034-007	1 1
12a		

(*) for assembling with drive gear (S)

Changeable elements for **Spectral** system.

Table 4

11	027-021
12a	034-008

Table 1

○	№		
	RAL 9016	RAL 8017	RAL 9006
5a	033-018	033-019	033-020
7a	033-011 033-057	033-012 033-058	033-013 033-059
8a			
9a	200-026 034-015 034-016	200-027 034-017 034-018	200-028 034-019 034-020
10			

RAL 9016 - white
RAL 8017 - brown
RAL 9006 - silver

ASSEMBLING WITH DRIVE GEAR 7,5SR (SR)

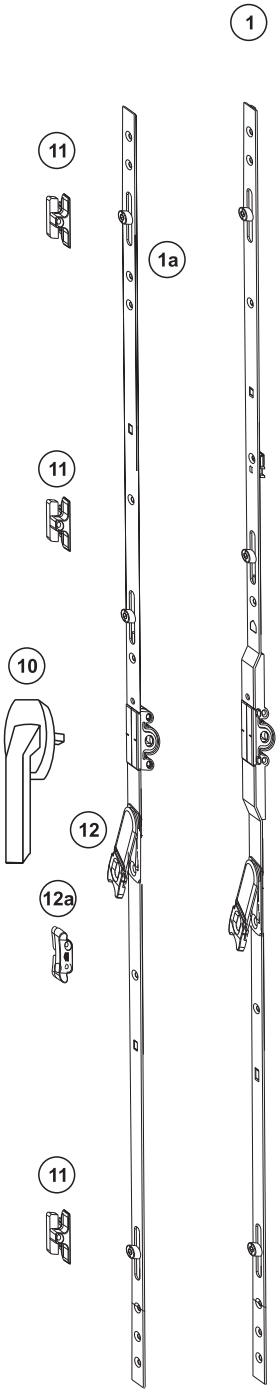

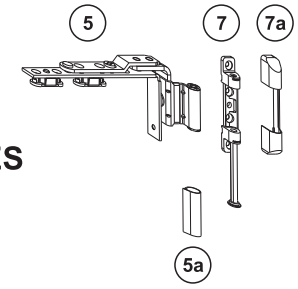

LIST OF BASIC SUBASSEMBLIES (TURN WINDOWS)

1 Drive gear (7,5SR)
1a Drive gear SR (only SR1/A for SR 4)
4 Notch hinge leaf TwO 9/B
5 Corner hinge leaf TwAl 9
5a Bearing guard IVA
7 Upper hinge bracket TwO
7a Bracket guard IIIB
8 Lower hinge bracket
8a Bracket guard XA
9 Lower notch hinge leaf L/P
9a Leaf guard IXA L/P
10 Handle
11 Peripheral striker plate Al
12 Lift with blockade
12a Lift striker plate Al

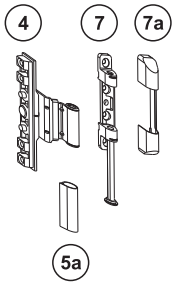

NOTE:
Handle and decorative elements (guards) available in RAL colour palette **Table 1**

Changeable elements for **Spectral** system **Table 4**

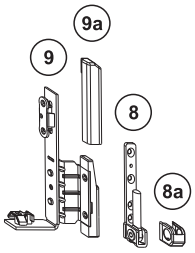

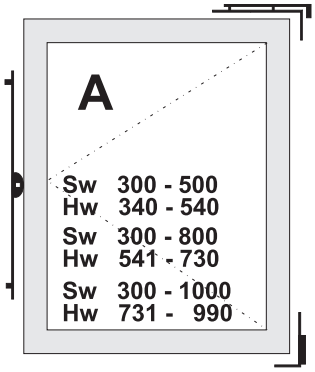

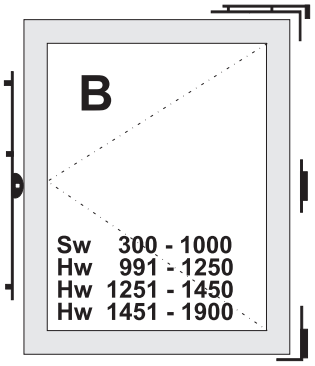

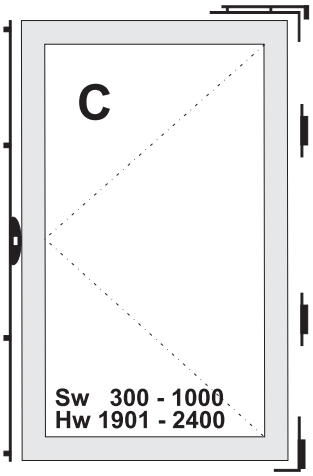

SELECTION OF ALU KARO HARDWARE
FOR TURN WINDOWS R AI
SYSTEM MB-59S

ASSEMBLING WITH DRIVE GEAR 7,5SR or (SR)

A1
Sw 300 - 500
Hw 340 - 540

○	№	1..
1	004-032 (*)	1
1a	-	-
	017-003	-
4	015-004	1
5	016-012	1
	016-015	1
7	016-016	
8		
9	L R	1
5a	Table 1	1
7a		1
		1
8a		1
		1
9a		
10		
11	034-010	2
12	-	-
	-	-
12a		

A2
Sw 300 - 800
Hw 541 - 730

○	№	1..
1	004-033 (*)	1
1a	-	-
	017-003	-
4	015-004	1
5	016-012	1
	016-015	1
7	016-016	
8		
9	L R	1
5a	Table 1	1
7a		1
		1
8a		1
		1
9a		
10		
11	034-010	2
12	-	-
	-	-
12a		

A3
Sw 300 - 1000
Hw 731 - 990

○	№	1..
1	004-034 (*)	1
1a	-	-
	017-003	-
4	015-004	1
5	016-012	1
	016-015	1
7	016-016	
8		
9	L R	1
5a	Table 1	1
7a		1
		1
8a		1
		1
9a		
10		
11	034-010	2
12	-	-
	-	-
12a		

B1
Sw 300 - 1000
Hw 991 - 1250

○	№	1..
1	004-035	1
	004-017 (*)	1
1a	019-005	1
	017-003	1
4	015-004	1
5	016-012	1
	016-015	1
7	016-016	
8		
9	L R	1
5a	Table 1	2
7a		2
		1
8a		1
		1
9a		
10		
11	034-010	3
12	-	-
	-	-
12a		

B2
Sw 300 - 1000
Hw 1251 - 1450

○	№	1..
1	004-036	1
	004-018 (*)	1
1a	019-005	1
	017-003	1
4	015-004	1
5	016-012	1
	016-015	1
7	016-016	
8		
9	L R	1
5a	Table 1	2
7a		2
		1
8a		1
		1
9a		
10		
11	034-010	3
12	-	-
	-	-
12a		

B3
Sw 300 - 1000
Hw 1451 - 1900

○	№	1..
1	004-037	1
	004-019 (*)	1
1a	019-005	1
	017-003	1
4	015-004	1
5	016-012	2
	016-015	1
7	016-016	
8		
9	L R	1
5a	Table 1	2
7a		2
		1
8a		1
		1
9a		
10		
11	034-010	3
12	-	-
	-	-
12a		

C1
Sw 300 - 1000
Hw 1901 - 2400

○	№	1..
1	004-038	1
	004-020 (*)	1
1a	019-005	1
	017-003	2
4	015-004	1
5	016-012	3
	016-015	1
7	016-016	
8		
9	L R	1
5a	Table 1	1
7a		1
		1
8a		1
		1
9a		
10		
11	034-010	4
12	032-001	1
	034-007	1
12a		

(*) for assembling with drive gear (SR)

Changeable elements for **Spectral** system.

Table 4

11	027-021
12a	034-008

Table 1

○	№		
	RAL 9016	RAL 8017	RAL 9006
5a	033-018	033-019	033-020
7a	033-011	033-012	033-013
	033-057	033-058	033-059
8a	200-026	200-027	200-028
9a	034-015	034-017	034-019
	034-016	034-018	034-020
10			

RAL 9016 - white
RAL 8017 - brown
RAL 9006 - silver

ASSEMBLING OF ALU KARO HARDWARE
TILT WINDOWS U AI
SYSTEM MB-59S

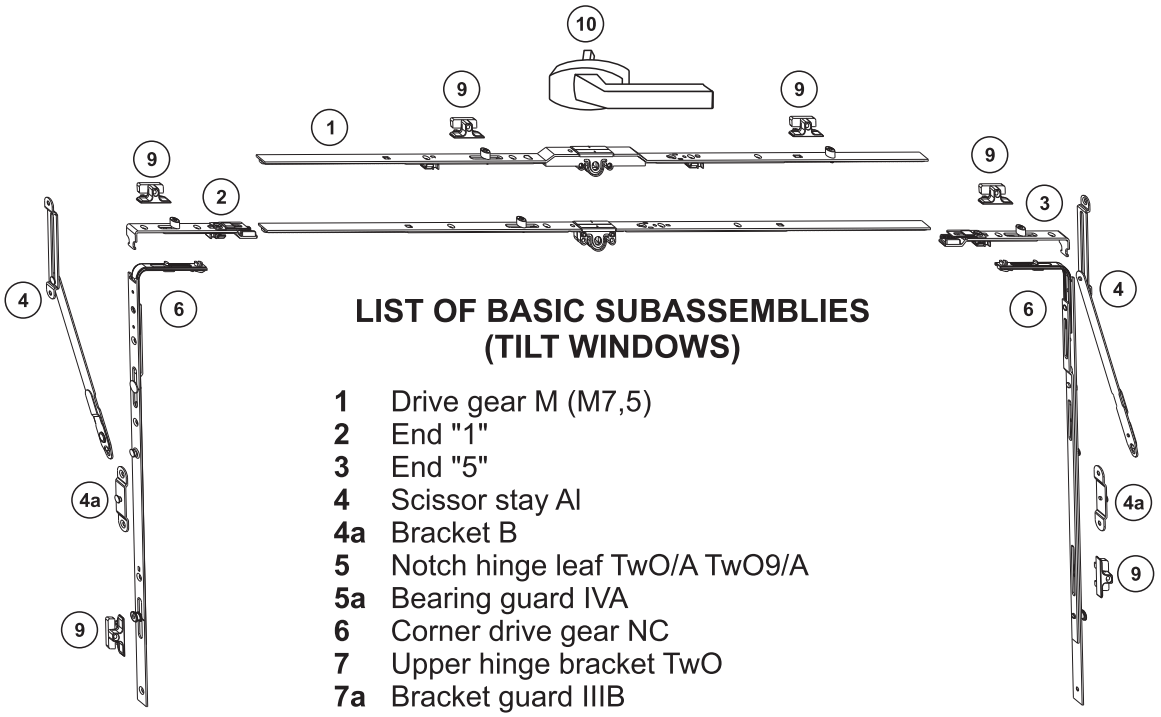

LIST OF BASIC SUBASSEMBLIES (TILT WINDOWS)

1 Drive gear M (M7,5)
2 End "1"
3 End "5"
4 Scissor stay AI
4a Bracket B
5 Notch hinge leaf TwO/A TwO9/A
5a Bearing guard IVA
6 Corner drive gear NC
7 Upper hinge bracket TwO
7a Bracket guard IIIB
8 Notch hinge leaf TwO/B TwO9/B
9 Peripheral striker plate AI
10 Handle

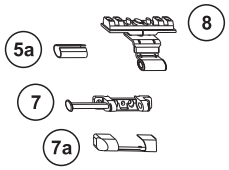

NOTE:
For spacing between hinges **>1000 mm** third hinge should be fitted acc. to **8**.

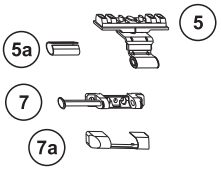

NOTE:
Handle and decorative elements (guards) available in RAL colour palette **Table 2**

Changeable elements for **Spectral** system **Table 5**

ASSEMBLING OF ALU KARO HARDWARE
TILT WINDOWS U AI
SCOPES OF USE - SYSTEM MB-59S

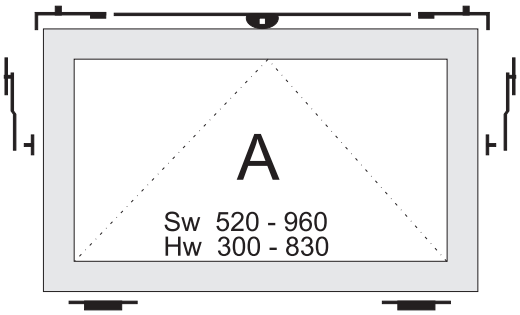

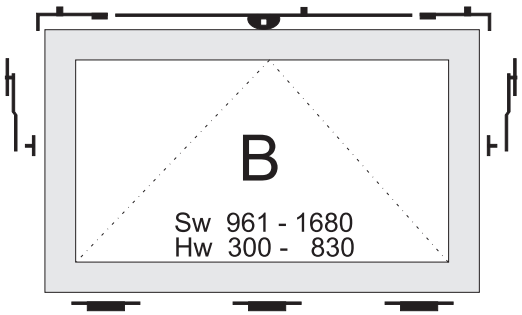

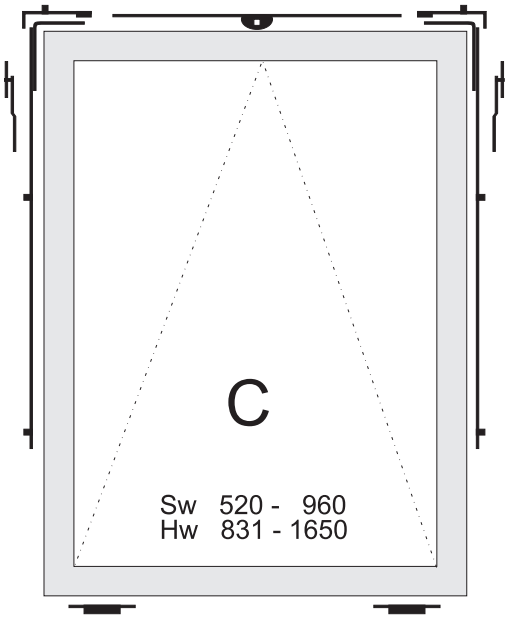

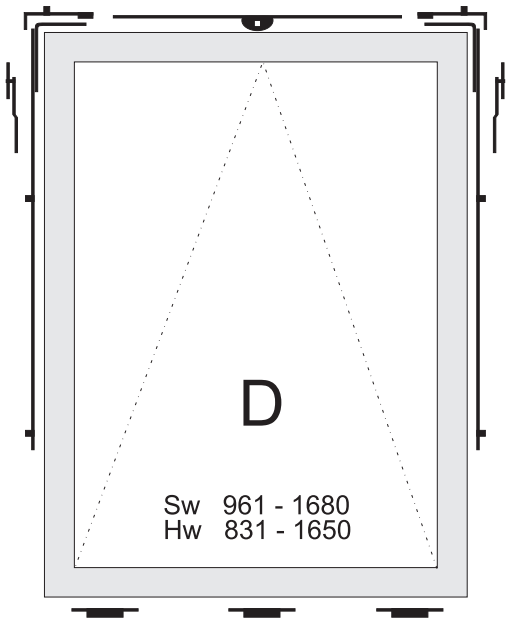

SELECTION OF ALU KARO HARDWARE
TILT WINDOWS U AI
SYSTEM MB-59S

A1
Sw 520 - 750(*)
Sw 670 - 750
Hw 300 - 830

○	№	1
1	002-018 002-001 (*)	1
2	007-001 007-008	1 1
3	034-014	2
4	031-003 019-001	2 1
4a	- 015-004	- 2
5	019-005	1
6	034-010	2
7		
8		
9		
5a	Table 2	2
7a		2 1
10		

A2
Sw 751 - 960
Hw 300 - 830

○	№	1
1	002-019 002-007 (*)	1
2	007-001 007-008	1 1
3	034-014	2
4	031-003 019-001	2 1
4a	- 015-004	- 2
5	019-005	1
6	034-010	2
7		
8		
9		
5a	Table 2	2
7a		2 1
10		

B1
Sw 961 - 1320
Hw 300 - 830

○	№	1..
1	002-020 002-003 (*)	1
2	007-001 007-008	1 1
3	034-014	2
4	031-003 019-001	2 1
4a	- 015-004	- 3
5	019-005	2
6	034-010	3
7		
8		
9		
5a	Table 2	3
7a		3 1
10		

B2
Sw 1321 - 1680
Hw 300 - 830

○	№	1
1	002-021 002-004 (*)	1
2	007-001 007-008	1 1
3	034-014	2
4	031-003 019-001	2 1
4a	- 015-004	- 3
5	019-005	2
6	034-010	3
7		
8		
9		
5a	Table 2	3
7a		3 1
10		

C1
Sw 520 - 750(*)
Sw 670 - 750
Hw 831 - 1200

○	№	1
1	002-018 002-001 (*)	1
2	007-001 007-008	1 1
3	034-014	2
4	- 019-001	- 1
4a	006-006 015-004	2 2
5	019-005	1
6	034-010	4
7		
8		
9		
5a	Table 2	2
7a		2 1
10		

C2
Sw 751 - 960
Hw 831 - 1200

○	№	1
1	002-019 002-007 (*)	1
2	007-001 007-008	1 1
3	034-014	2
4	- 019-001	- 1
4a	006-006 015-004	2 2
5	019-005	1
6	034-010	4
7		
8		
9		
5a	Table 2	2
7a		2 1
10		

C3
Sw 520 - 750(*)
Sw 670 - 750
Hw 1201 - 1450

○	№	1
1	002-018 002-001 (*)	1
2	007-001 007-008	1 1
3	034-014	2
4	- 019-001	- 1
4a	006-007 015-004	2 2
5	019-005	1
6	034-010	4
7		
8		
9		
5a	Table 2	2
7a		2 1
10		

C4
Sw 751 - 960
Hw 1201 - 1450

○	№	1
1	002-019 002-007 (*)	1
2	007-001 007-008	1 1
3	034-014	2
4	- 019-001	- 1
4a	006-007 015-004	2 2
5	019-005	1
6	034-010	4
7		
8		
9		
5a	Table 2	2
7a		2 1
10		

C5
Sw 520 - 750(*)
Sw 670 - 750
Hw 1451 - 1650

○	№	1
1	002-018 002-001 (*)	1
2	007-001 007-008	1 1
3	034-014	2
4	- 019-001	- 1
4a	006-008 015-004	2 2
5	019-005	1
6	034-010	4
7		
8		
9		
5a	Table 2	2
7a		2 1
10		

C6
Sw 751 - 960
Hw 1451 - 1650

○	№	1
1	002-018 002-007 (*)	1
2	007-001 007-008	1 1
3	034-014	2
4	- 019-001	- 1
4a	006-008 015-004	2 2
5	019-005	1
6	034-010	4
7		
8		
9		
5a	Table 2	2
7a		2 1
10		

(*) for assembling with drive gear (M)

Table 2

○	№		
	RAL 9016	RAL 8017	RAL 9006
5a	033-018	033-019	033-020
7a	033-011 200-026	033-012 200-027	033-013 200-028
10			

RAL 9016 - white
RAL 8017- brown
RAL 9006 - silver

Changeable elements for **Spectral** system.

Table 5

4	031-004
9	027-021

SELECTION OF ALU KARO HARDWARE
TILT WINDOWS U AI
SYSTEM MB-59S

D1 Sw 961 - 1320 Hw 831 - 1200

○	№	1..
1	002-020 002-003 (*)	1
2	007-001 007-008	1 1
3	034-014	2
4	- 019-001	- 1
4a	006-006 015-004	2 3
5	019-005 034-010	2 5
6		
7		
8		
9		

5a	Table 2	3
7a		3 1
10		

D2 Sw 961 - 1320 Hw 1201 - 1450

○	№	1..
1	002-020 002-003 (*)	1
2	007-001 007-008	1 1
3	034-014	2
4	- 019-001	- 1
4a	006-007 015-004	2 3
5	019-005 034-010	2 5
6		
7		
8		
9		

5a	Table 2	3
7a		3 1
10		

D3 Sw 961 - 1320 Hw 1451 - 1650

○	№	1..
1	002-020 002-003 (*)	1
2	007-001 007-008	1 1
3	034-014	2
4	- 019-001	- 1
4a	006-008 015-004	2 3
5	019-005 034-010	2 5
6		
7		
8		
9		

5a	Table 2	3
7a		3 1
10		

D4 Sw 1321 - 1680 Hw 831 - 1200

○	№	1..
1	002-021 002-004 (*)	1
2	007-001 007-008	1 1
3	034-014	2
4	- 019-001	- 1
4a	006-006 015-004	2 3
5	019-005 034-010	2 5
6		
7		
8		
9		

5a	Table 2	3
7a		3 1
10		

D5 Sw 1321 - 1680 Hw 1201 - 1450

○	№	1..
1	002-021 002-004 (*)	1
2	007-001 007-008	1 1
3	034-014	2
4	- 019-001	- 1
4a	006-007 015-004	2 3
5	019-005 034-010	2 5
6		
7		
8		
9		

5a	Table 2	3
7a		3 1
10		

D6 Sw 1321 - 1680 Hw 1451 - 1650

○	№	1..
1	002-021 002-004 (*)	1
2	007-001 007-008	1 1
3	034-014	2
4	- 019-001	- 1
4a	006-007 015-004	2 3
5	019-005 034-010	2 5
6		
7		
8		
9		

5a	Table 2	3
7a		3 1
10		

(*) for assembling with drive gear (M)

Table 2

○	№		
	RAL 9016	RAL 8017	RAL 9006
5a	033-018	033-019	033-020
7a	033-011 200-026	033-012 200-027	033-013 200-028
10			

RAL 9016 - white
RAL 8017- brown
RAL 9006 - silver

Changeable elements for **Spectral** system.

Table 5

4	031-004
9	027-021

PROCESSING
HANDLE AND HINGES ALU KARO SYSTEM MB-59S

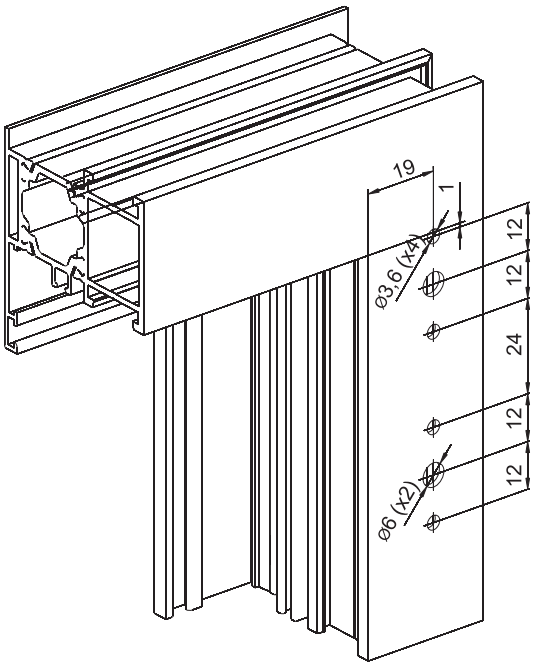

Holes for upper hinge bracket **TwO 6**
Jig No **1AW0210XX**

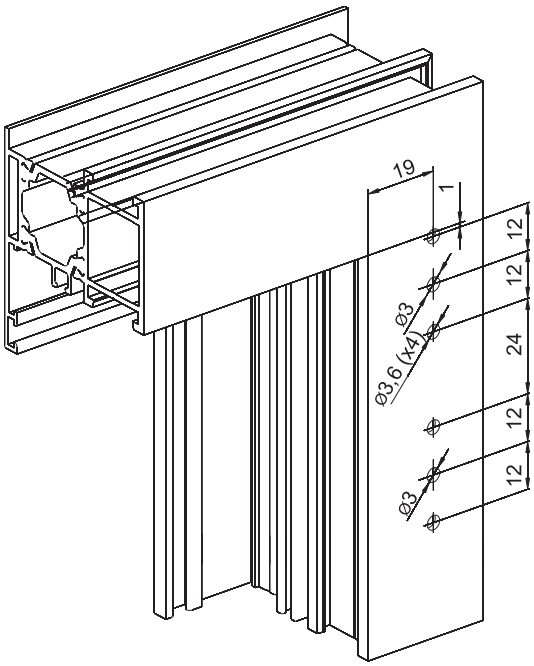

Holes for upper hinge bracket **TwO 3**
Jig No **038-013**

X= 14.5 mm for drive gear **M**
X= 7 mm for drive gear **7.5M**

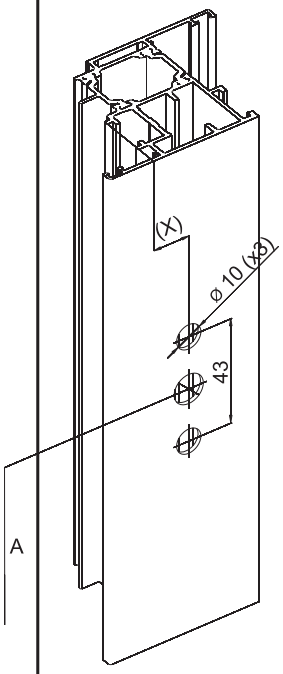

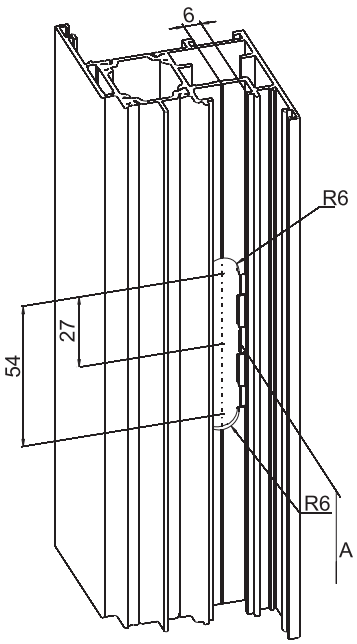

Holes for the handle
Jig No **038-031 (7,5)**
038-004 (15M)

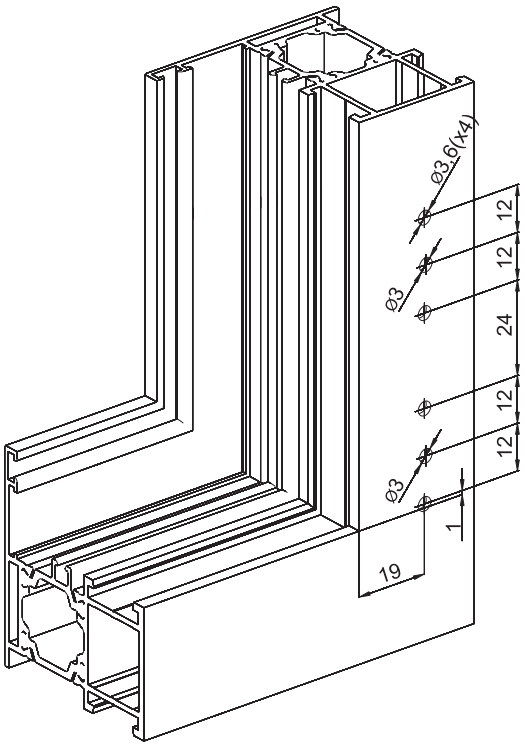

Holes for lower notch hinge bracket
Jig No **038-013**

ASSEMBLING OF ALU KARO HARDWARE
FOR TURN / TILT WINDOWS RU AI
SYSTEM MB-59S

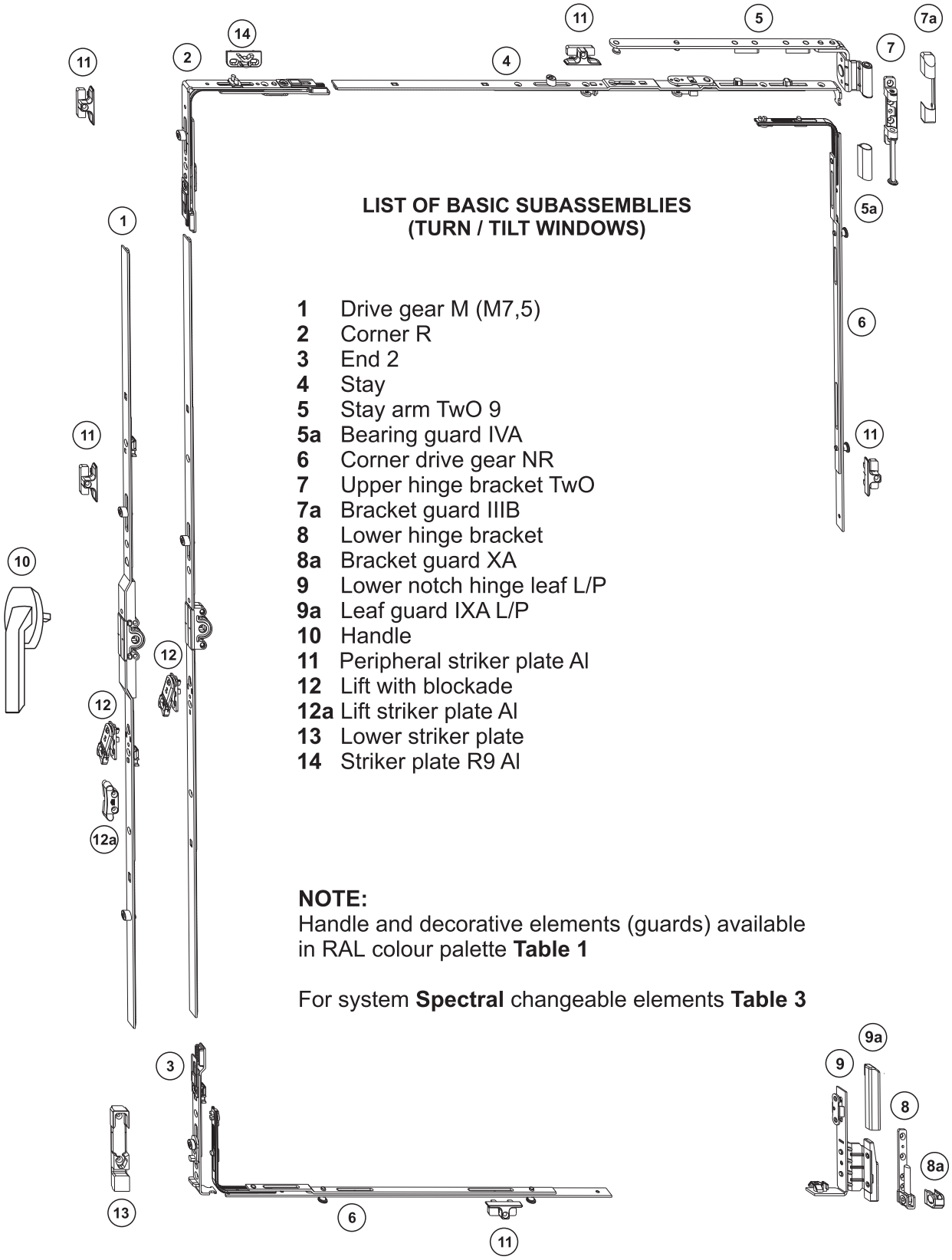

LIST OF BASIC SUBASSEMBLIES
(TURN / TILT WINDOWS)

1 Drive gear M (M7,5)
2 Corner R
3 End 2
4 Stay
5 Stay arm TwO 9
5a Bearing guard IVA
6 Corner drive gear NR
7 Upper hinge bracket TwO
7a Bracket guard IIIB
8 Lower hinge bracket
8a Bracket guard XA
9 Lower notch hinge leaf L/P
9a Leaf guard IXA L/P
10 Handle
11 Peripheral striker plate Al
12 Lift with blockade
12a Lift striker plate Al
13 Lower striker plate
14 Striker plate R9 Al

NOTE:
Handle and decorative elements (guards) available in RAL colour palette **Table 1**

For system **Spectral** changeable elements **Table 3**

ASSEMBLING OF ALU KARO HARDWARE
TURN / TILT WINDOWS RU AI
SCOPES OF USE - SYSTEM MB-59S

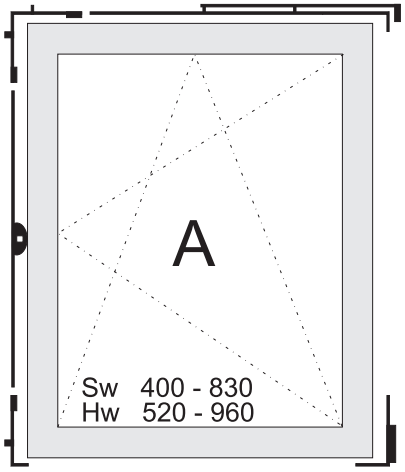

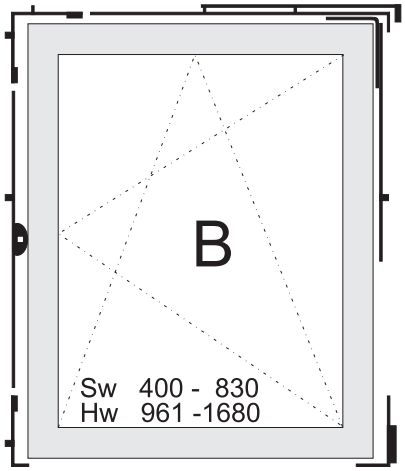

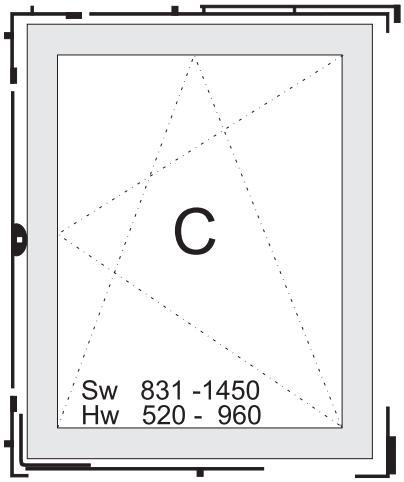

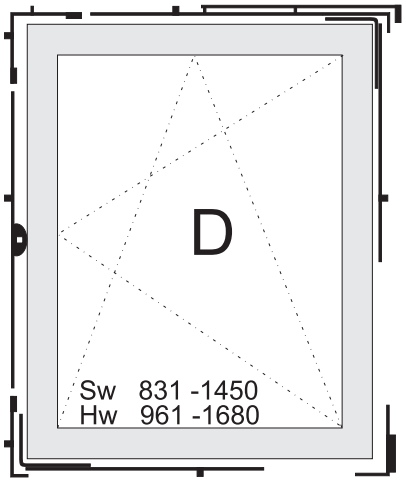

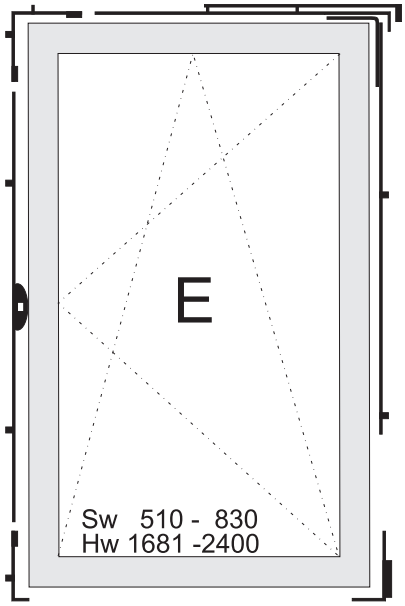

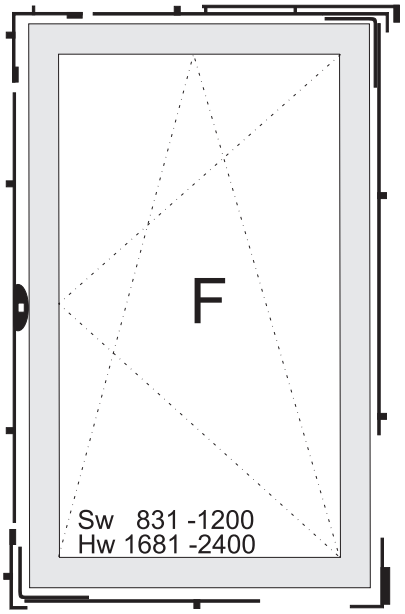

KRAJOWE AKCESORIA I ROZWIĄZANIA OKUCIOWE
KARO

ROMB SYSTEM

SELECTION OF ALU KARO HARDWARE
FOR TURN / TILT WINDOWS RU AI
SYSTEM MB-59S

A1
Sw 400 - 510
Hw 670 - 750
Hw 520 - 750(*)

○	?	1..
1	002-018 005-001(*)	1 1
2	007-004 009-001	1 1
3	010-007	1
4	-	-
5	015-004 016-012	1 1
6		1
7		
8		
9	016-015 016-016	

5a	Table 1	1
7a		1
8a		1
9a		1
10		

11	034-010	1
12	-	-
12a	034-009 034-005	1 1
13		
14		

A2
Sw 400 - 510
Hw 751 - 960

○	?	1..
1	002-019 002-007(*)	1 1
2	005-001 007-004	1 1
3	009-001 010-007	1 1
4	-	-
5	015-004 016-012	1 1
6		1
7		
8		
9	016-015 016-016	

5a	Table 1	1
7a		1
8a		1
9a		1
10		

11	034-010	1
12	032-001 034-007	1 1
12a	034-009 034-005	1 1
13		
14		

A3
Sw 511 - 760
Hw 670 - 750
Hw 520 - 750(*)

○	?	1..
1	002-018 002-001(*)	1 1
2	005-001 007-004	1 1
3	009-002 010-008	1 1
4	-	-
5	015-004 016-012	1 1
6		1
7		
8		
9	016-015 016-016	

5a	Table 1	1
7a		1
8a		1
9a		1
10		

11	034-010	1
12	-	-
12a	034-009 034-005	1 1
13		
14		

A4
Sw 511 - 760
Hw 751 - 960

○	?	1..
1	002-019 022-007(*)	1 1
2	005-001 007-004	1 1
3	009-002 010-008	1 1
4	-	-
5	015-004 016-012	1 1
6		1
7		
8		
9	016-015 016-016	

5a	Table 1	1
7a		1
8a		1
9a		1
10		

11	034-010	1
12	032-001 034-007	1 1
12a	034-009 034-005	1 1
13		
14		

A5
Sw 761 - 830
Hw 670 - 750
Hw 520 - 750(*)

○	?	1..
1	002-018 005-001(*)	1 1
2	007-004 009-005	1 1
3	010-008	1 1
4	-	-
5	015-004 016-012	1 1
6		1
7		
8		
9	016-015 016-016	

5a	Table 1	1
7a		1
8a		1
9a		1
10		

11	034-010	1
12	-	-
12a	034-009 034-005	1 1
13		
14		

A6
Sw 761 - 830
Hw 751 - 960

○	?	1..
1	002-019 022-007(*)	1 1
2	005-001 007-004	1 1
3	009-005 010-008	1 1
4	-	-
5	015-004 016-012	1 1
6		1
7		
8		
9	016-015 016-016	

5a	Table 1	1
7a		1
8a		1
9a		1
10		

11	034-010	1
12	032-001 034-007	1 1
12a	034-009 034-005	1 1
13		
14		

A7
Sw 831 - 1000
Hw 670 - 750
Hw 520 - 750(*)

○	?	1..
1	002-018 002-001(*)	1 1
2	005-001 007-004	1 1
3	009-003 010-009	1 1
4	-	-
5	015-004 016-012	1 1
6		1
7		
8		
9	016-015 016-016	

5a	Table 1	1
7a		1
8a		1
9a		1
10		

11	034-010	3
12	-	-
12a	034-009 034-005	1 1
13		
14		

B1
Sw 400 - 510
Hw 961 - 1320

○	?	1..
1	002-020 002-003(*)	1 1
2	005-001 007-002	1 1
3	009-001 010-008	1 1
4	006-003	1
5	015-004 016-012	1 1
6		1
7		
8		
9	016-015 016-016	

5a	Table 1	1
7a		1
8a		1
9a		1
10		

11	034-010	3
12	032-001 034-007	1 1
12a	034-009 034-005	1 1
13		
14		

B2
Sw 511 - 760
Hw 961 - 1320

○	?	1..
1	002-020 002-003(*)	1 1
2	005-001 007-002	1 1
3	009-002 010-008	1 1
4	006-003	1
5	015-004 016-012	1 1
6		1
7		
8		
9	016-015 016-016	

5a	Table 1	1
7a		1
8a		1
9a		1
10		

11	034-010	3
12	032-001 034-007	1 1
12a	034-009 034-005	1 1
13		
14		

B3
Sw 761 - 830
Hw 961 - 1320

○	?	1..
1	002-020 002-003(*)	1 1
2	005-001 007-002	1 1
3	009-005 010-008	1 1
4	006-003	1
5	015-004 016-012	1 1
6		1
7		
8		
9	016-015 016-016	

5a	Table 1	1
7a		1
8a		1
9a		1
10		

11	034-010	3
12	032-001 034-007	1 1
12a	034-009 034-005	1 1
13		
14		

(*) for assembling with drive gear (M)

Changeable elements for **Spectral** system.

Table 3

11	027-021
12a	034-008 026-001
13	034-006
14	

KARO — KRAJOWE AKCESORIA I ROZWIĄZANIA OKUCIOWE

ROMB SYSTEM

SELECTION OF ALU KARO HARDWARE
FOR TURN / TILT WINDOWS RU AI
SYSTEM MB-59S

B4 — Sw 400 - 510, Hw 1321 - 1680

○	№	1..
1	002-018 002-004(*)	1
2	005-001 007-002	1 1
3	009-001 010-007	1 1
4	006-004	1
5	015-004 016-012	1 1
6		1
7		
8		
9	016-015 016-016	
5a	Table 1	1
7a		1 1
8a		1 1
9a		
10		
11	034-010	3
12	032-001 034-007	1 1
12a	034-009 034-005	1 1
13		
14		

B5 — Sw 511 - 760, Hw 1321 - 1680

○	№	1..
1	002-021 002-004(*)	1
2	005-001 007-002	1 1
3	009-002 010-008	1 1
4	006-004	1
5	015-004 016-012	1 1
6		1
7		
8		
9	016-015 016-016	
5a	Table 1	1
7a		1 1
8a		1 1
9a		
10		
11	034-010	3
12	032-001 034-007	1 1
12a	034-009 034-005	1 1
13		
14		

B6 — Sw 761 - 830, Hw 1321 - 1680

○	№	1..
1	002-021 002-004(*)	1
2	005-001 007-002	1 1
3	009-005 010-008	1 1
4	006-004	1
5	015-004 016-012	1 1
6		1
7		
8		
9	016-015 016-016	
5a	Table 1	1
7a		1 1
8a		1 1
9a		
10		
11	034-010	3
12	032-001 034-007	1 1
12a	034-009 034-005	1 1
13		
14		

C1 — Sw 831 - 1000, Hw 751 - 960

○	№	1..
1	002-019 002-007(*)	1
2	005-001 007-004	1 1
3	009-003 010-009	1 1
4	006-002	1
5	015-004 016-012	1 1
6		1
7		
8		
9	016-015 016-016	
5a	Table 1	1
7a		1 1
8a		1 1
9a		
10		
11	034-010	3
12	032-001 034-007	1 1
12a	034-009 034-005	1 1
13		
14		

C2 — Sw 1001 - 1200, Hw 670 - 750, Hw 520 - 750(*)

○	№	1..
1	002-018 002-007(*)	1
2	005-001 007-004	1 1
3	009-004 010-009	1 1
4	006-002	1
5	015-004 016-012	1 1
6		1
7		
8		
9	016-015 016-016	
5a	Table 1	1
7a		1 1
8a		1 1
9a		
10		
11	034-010	3
12	- -	- -
12a	034-009 034-005	1 1
13		
14		

C3 — Sw 1001 - 1200, Hw 751 - 960

○	№	1..
1	002-019 002-007(*)	1
2	005-001 007-004	1 1
3	009-004 010-009	1 1
4	006-002	1
5	015-004 016-012	1 1
6		1
7		
8		
9	016-015 016-016	
5a	Table 1	1
7a		1 1
8a		1 1
9a		
10		
11	034-010	3
12	032-001 034-007	1 1
12a	034-009 034-005	1 1
13		
14		

C4 — Sw 1201 - 1450, Hw 751 - 960

○	№	1..
1	002-019 002-007(*)	1
2	005-001 007-004	1 1
3	009-006 010-009	1 1
4	006-003	1
5	015-004 016-012	1 1
6		1
7		
8		
9	016-015 016-016	
5a	Table 1	1
7a		1 1
8a		1 1
9a		
10		
11	034-010	3
12	032-001 034-007	1 1
12a	034-009 034-005	1 1
13		
14		

D1 — Sw 831 - 1000, Hw 961 - 1320

○	№	1..
1	002-020 002-003(*)	1
2	005-001 007-002	1 1
3	009-003 010-009	1 1
4		1+1
5	015-004 016-012	1 1
6	006-002 006-003	1
7		
8		
9	016-015 016-016	
5a	Table 1	1
7a		1 1
8a		1 1
9a		
10		
11	034-010	5
12	032-001 034-007	1 1
12a	034-009 034-005	1 1
13		
14		

D2 — Sw 1001 - 1200, Hw 961 - 1320

○	№	1..
1	002-020 002-003(*)	1
2	005-001 007-002	1 1
3	009-004 010-009	1 1
4		1+1
5	015-004 016-012	1 1
6	006-002 006-003	1
7		
8		
9	016-015 016-016	
5a	Table 1	1
7a		1 1
8a		1 1
9a		
10		
11	034-010	5
12	032-001 034-007	1 1
12a	034-009 034-005	1 1
13		
14		

D3 — Sw 1201 - 1450, Hw 961 - 1320

○	№	1..
1	002-019 002-003(*)	1
2	005-001 007-002	1 1
3	009-006 010-009	1 1
4	006-003	2
5	015-004 016-012	1 1
6		1
7		
8		
9	016-015 016-016	
5a	Table 1	1
7a		1 1
8a		1 1
9a		
10		
11	034-010	5
12	032-001 034-007	1 1
12a	034-009 034-005	1 1
13		
14		

(*) for assembling with drive gear (M.)

Changeable elements for **Spectral** system

Table 3

11	027-021
12a	034-008 026-001
13	034-006
14	

Table 1

○	№		
	RAL 9016	RAL 8017	RAL 9006
5a	033-018	033-019	033-020
7a	033-011 033-057	033-012 033-058	033-013 033-059
8a			
9a	034-015 034-016	034-017 034-018	034-019 034-020
10			

RAL 9016 - white
RAL 8017 - brown
RAL 9006 - silver

ASSEMBLING OF THE HARDWARE

KARO — KRAJOWE AKCESORIA I ROZWIĄZANIA OKUCIOWE

ROMB SYSTEM

SELECTION OF ALU KARO HARWARE
FOR TURN / TILT WINDOWS RU AI
SYSTEM MB-59S

D4 — Sw 831 - 1000, Hw 1321 - 1680

○	№	1..
1	002-021 002-004 (*)	1
2	005-001 007-002	1 1
3	009-003 010-009	1 1
4		1+1
5	015-004 016-012	1 1
6	006-002 006-004	1
7		
8		
9	016-015 015-016	

5a	Table 1	1
7a		1 1
8a		1 1
9a		
10		

11	034-010	5
12	032-001 034-007	1 1
12a	034-009 034-005	1 1
13		
14		

D5 — Sw 1001 - 1200, Hw 1321 - 1680

○	№	1
1	002-021 002-004 (*)	1
2	005-001 007-002	1 1
3	009-004 010-009	1 1
4		1+1
5	015-004 016-012	1 1
6	006-002 006-004	1
7		
8		
9	016-015 015-016	

5a	Table 1	1
7a		1 1
8a		1 1
9a		
10		

11	034-010	5
12	032-001 034-007	1 1
12a	034-009 034-005	1 1
13		
14		

D6 — Sw 1201 - 1450, Hw 1321 - 1680

○	№	1
1	002-021 002-004 (*)	1
2	005-001 007-002	1 1
3	009-006 010-009	1 1
4		1+1
5	015-004 016-012	1 1
6	006-003 006-004	1
7		
8		
9	016-015 015-016	

5a	Table 1	1
7a		1 1
8a		1 1
9a		
10		

11	034-010	5
12	032-001 034-007	1 1
12a	034-009 034-005	1 1
13		
14		

F1 — Sw 831 - 1000, Hw 1681 - 2040

○	№	1
1	002-022 002-005(*)	1
2	005-001 007-003	1 1
3	009-003 010-009	1 1
4		1+1
5	015-004 016-012	1 1
6	006-002 006-005	1
7		
8		
9	016-015 015-016	

5a	Table 1	1
7a		1 1
8a		1 1
9a		
10		

11	034-010	7
12	032-001 034-007	1 1
12a	034-009 034-005	1 1
13		
14		

F2 — Sw 831 - 1000, Hw 2041 - 2400

○	№	1
1	002-023 002-006(*)	1
2	005-001 007-003	1 1
3	009-003 010-009	1 1
4		1+1
5	015-004 016-012	1 1
6	006-002 006-005	1
7		
8		
9	016-015 015-016	

5a	Table 1	1
7a		1 1
8a		1 1
9a		
10		

11	034-010	7
12	032-001 034-007	1 1
12a	034-009 034-005	1 1
13		
14		

F3 — Sw 1001 - 1200, Hw 1681 - 2040

○	№	1..
1	002-022 002-005(*)	1
2	005-001 007-003	1 1
3	009-004 010-009	1 1
4		1+1
5	015-004 016-012	1 1
6	006-002 006-005	1
7		
8		
9	016-015 015-016	

5a	Table 1	1
7a		1 1
8a		1 1
9a		
10		

11	034-010	7
12	032-001 034-007	1 1
12a	034-009 034-005	1 1
13		
14		

F4 — Sw 1001 - 1200, Hw 2041 - 2400

○	№	1
1	002-023 002-006(*)	1
2	005-001 007-003	1 1
3	009-004 010-009	1 1
4		1+1
5	015-004 016-012	1 1
6	006-002 006-005	1
7		
8		
9	016-015 015-016	

5a	Table 1	1
7a		1 1
8a		1 1
9a		
10		

11	034-010	7
12	032-001 034-007	1 1
12a	034-009 034-005	1 1
13		
14		

For **E3** item 4 № 009-005

E3 — Sw 761 - 830, Hw 1681 - 2040
E1 — Sw 510 - 760, Hw 1681 - 2040

○	№	1
1	002-022 002-005(*)	1
2	005-001 007-003	1 1
3	009-002 010-008	1 1
4	006-005	1
5	015-004 016-012	1 1
6		1
7		
8		
9	016-015 015-016	

5a	Table 1	1
7a		1 1
8a		1 1
9a		
10		

11	034-010	5
12	032-001 034-007	1 1
12a	034-009 034-005	1 1
13		
14		

Fof **E4** item 4 № 2009-005

E4 — Sw 761 - 830, Hw 2041 - 2400
E2 — Sw 510 - 760, Hw 2041 - 2400

○	№	1
1	002-023 002-006(*)	1
2	005-001 007-003	1 1
3	009-002 010-008	1 1
4	006-005	1
5	015-004 016-012	1 1
6		1
7		
8		
9	016-015 015-016	

5a	Table 1	1
7a		1 1
8a		1 1
9a		
10		

11	034-010	5
12	032-001 034-007	1 1
12a	034-009 034-005	1 1
13		
14		

(*) for assembling with hardware (M)

Changeable elements for **Spectral** system.

Table 3

11	027-021
12a	034-008 026-001
13	034-006
14	

Table 1

○	№		
	RAL 9016	RAL 8017	RAL 9006
5a	033-018	033-019	033-020
7a	033-011 033-057	033-012 033-058	033-013 033-059
8a			
9a	200-026 034-015 034-016	200-027 034-017 034-018	200-028 034-019 034-020
10			

RAL 9016 - white
RAL 8017 - brown
RAL 9006 - silver

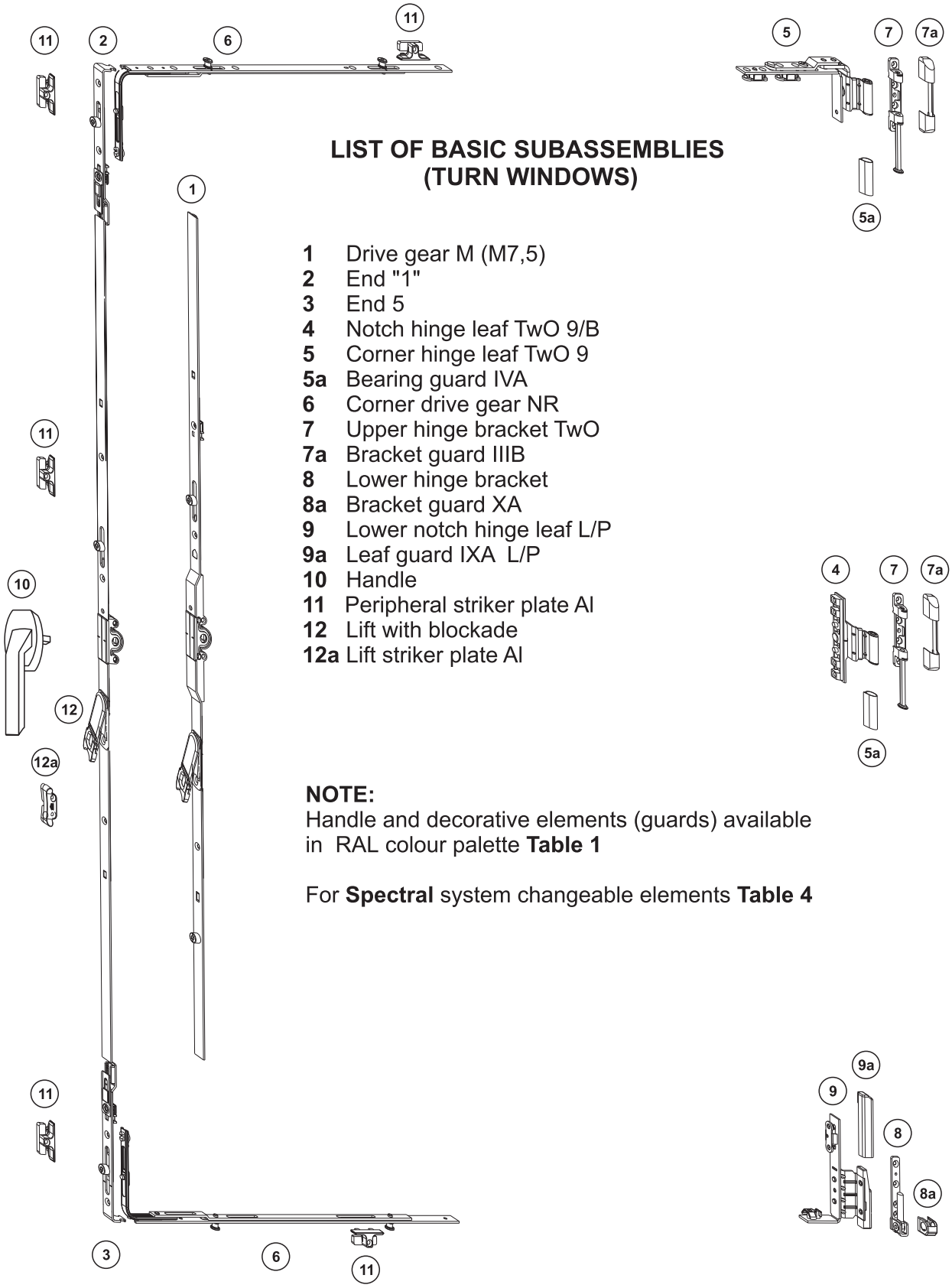

LIST OF BASIC SUBASSEMBLIES (TURN WINDOWS)

1 Drive gear M (M7,5)
2 End "1"
3 End 5
4 Notch hinge leaf TwO 9/B
5 Corner hinge leaf TwO 9
5a Bearing guard IVA
6 Corner drive gear NR
7 Upper hinge bracket TwO
7a Bracket guard IIIB
8 Lower hinge bracket
8a Bracket guard XA
9 Lower notch hinge leaf L/P
9a Leaf guard IXA L/P
10 Handle
11 Peripheral striker plate AI
12 Lift with blockade
12a Lift striker plate AI

NOTE:
Handle and decorative elements (guards) available in RAL colour palette **Table 1**

For **Spectral** system changeable elements **Table 4**

ASSEMBLING OF ALU KARO HARDWARE
TURN WINDOWS R AI
SCOPES OF USE - SYSTEM MB-59S

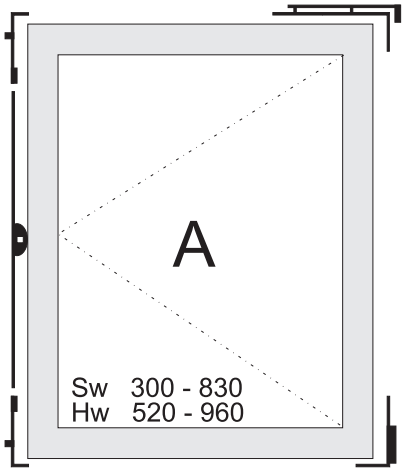

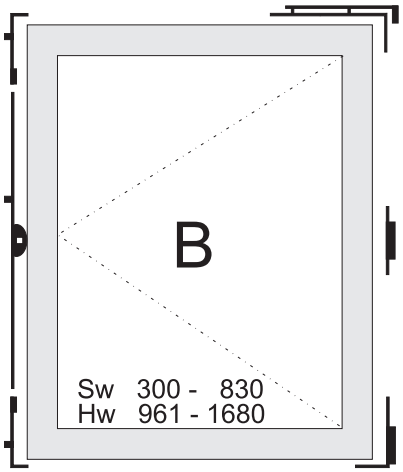

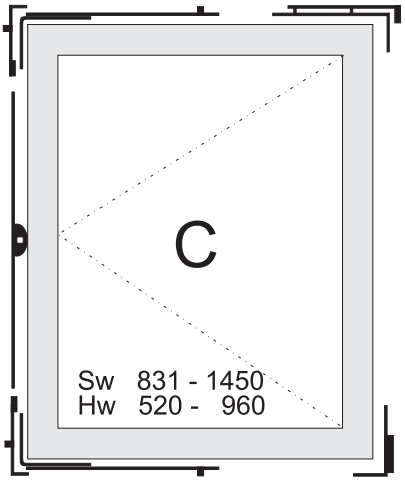

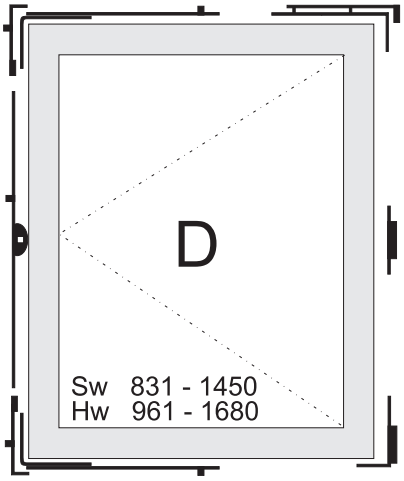

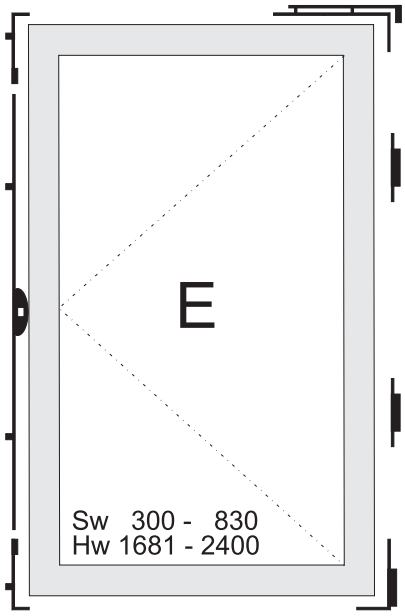

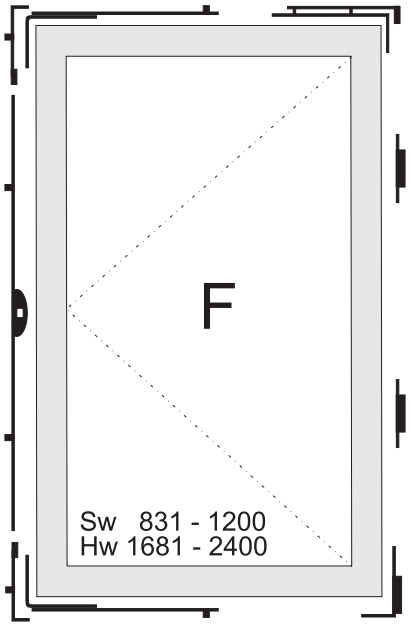

SELECTION OF ALU KARO HARDWARE
TURN WINDOWS R AI
SYSTEM MB-59S

A1
Sw 300 - 830
Hw 670 - 750
Hw 520 - 750(*)

○	№	1..
1	002-018 002-001 (*)	1
2	007-001 007-008	1 1
3	- 017-003	- 1
4	-	-
5	015-004 016-012	1 1
6		1
7		
8		
9	016-015 016-016	

5a	Table 1	1
7a		1 1
8a		1 1
9a		
10		

11	034-010	2
12	032-001 034-007	1 1
12a		

A2
Sw 300 - 830
Hw 751 - 960

○	№	1..
1	002-019 002-007 (*)	1
2	007-001 007-008	1 1
3	- 017-003	- 1
4	-	-
5	015-004 016-012	1 1
6		1
7		
8		
9	016-015 016-016	

5a	Table 1	1
7a		1 1
8a		1 1
9a		
10		

11	034-010	2
12	032-001 034-007	1 1
12a		

B1
Sw 300 - 830
Hw 961 - 1320

○	№	1..
1	002-020 002-003 (*)	1
2	007-001 007-008	1 1
3	019-005 017-003	1 1
4	-	-
5	015-004 016-012	2 1
6		1
7		
8		
9	016-015 016-016	

5a	Table 1	2
7a		2 1
8a		1 1
9a		
10		

11	034-010	3
12	032-001 034-007	1 1
12a		

B2
Sw 300 - 830
Hw 1321 - 1680

○	№	1..
1	002-021 002-004 (*)	1
2	007-001 007-008	1 1
3	019-005 017-003	1 1
4	-	-
5	015-004 016-012	2 1
6		1
7		
8		
9	016-015 016-016	

5a	Table 1	2
7a		2 1
8a		1 1
9a		
10		

11	034-010	3
12	032-001 034-007	1 1
12a		

C1
Sw 831 - 1200
Hw 670 - 750
Hw 520 - 750(*)

○	№	1..
1	002-018 002-001 (*)	1
2	007-001 007-008	1 1
3	- 017-003	- 1
4	006-002	2
5	015-004 016-012	1 1
6		1
7		
8		
9	016-015 016-016	

5a	Table 1	1
7a		1 1
8a		1 1
9a		
10		

11	034-010	4
12	032-001 034-007	1 1
12a		

C2
Sw 831 - 1200
Hw 751 - 960

○	№	1..
1	002-019 002-007 (*)	1
2	007-001 007-008	1 1
3	- 017-003	- 1
4	006-002	2
5	015-004 016-012	1 1
6		1
7		
8		
9	016-015 016-016	

5a	Table 1	1
7a		1 1
8a		1 1
9a		
10		

11	034-010	4
12	032-001 034-007	1 1
12a		

C3
Sw 1201 - 1450
Hw 751 - 960

○	№	1..
1	002-019 002-007 (*)	1
2	007-001 007-008	1 1
3	019-005 017-003	1 1
4	006-003	2
5	015-004 016-012	1 1
6		1
7		
8		
9	016-015 016-016	

5a	Table 1	1
7a		1 1
8a		1 1
9a		
10		

11	034-010	4
12	032-001 034-007	1 1
12a		

(*) for assembling with drive gear (M)

Changeable elements for **Spectral** system.

Table 4

11	027-021
12a	034-008

Table 1

○	№		
	RAL 9016	RAL 8017	RAL 9006
5a	033-018	033-019	033-020
7a	033-011 033-057	033-012 033-058	033-013 033-059
8a			
9a	200-026 034-015 034-016	200-027 034-017 034-018	200-028 034-019 034-020
10			

RAL 9016 - white
RAL 8017 - brown
RAL 9006 - silver

LEVER LOCKING ROD TAKT - 150
FOR WINDOWS AND TRANSOMS
GENERAL INFORMATION

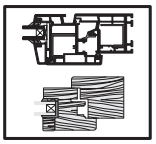

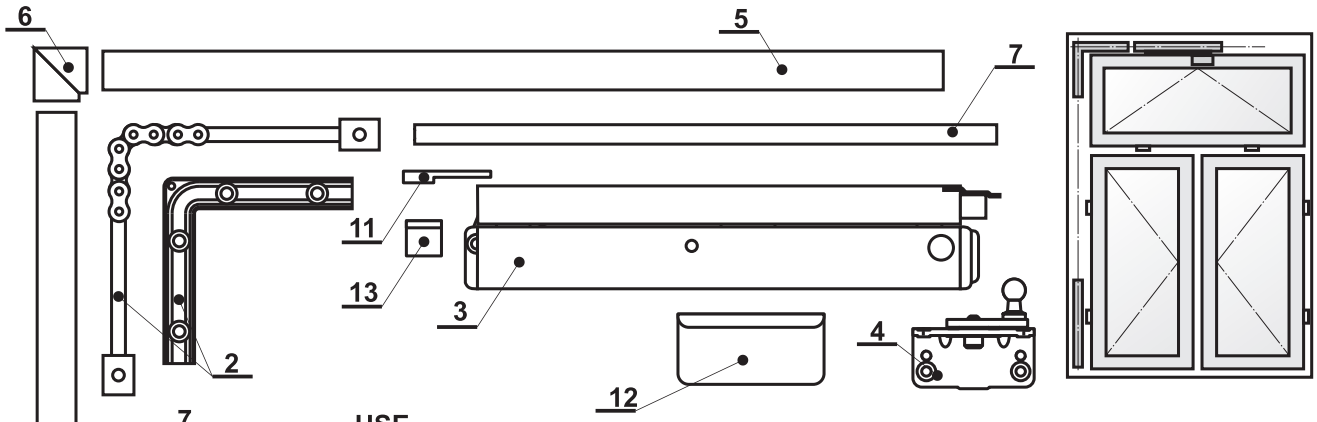

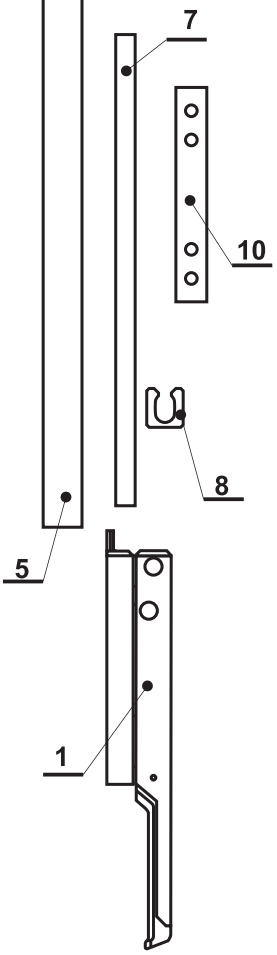

USE

Lever locking rod TAKT-150 (in basic version) is used in vertically mounted rectangular tilt windows made of wood, PVC and aluminium with horizontal sash turn axis.
It enables inward tilting of sashes with max weight 80 kg, sash width from 400 mm to 3600 mm and minimum height Hz = 300 mm.
Lever locking rod TAKT-150 allows operating from the floor highly placed transom hardware. The tilt depth is ca 150 mm.
Lever locking rod construction enables its assembling from the right or left side of the sash.
All steel elements of lever locking rod are zinc coated with silver passivation and elements made of light alloys have decorative varnished or anodized finish.

Permissible glass pane weight in the window depending on the sash width.

Sash width	Number of scissors	Max weight of glass panes
400 - 1200 mm	1 szt. / kpl.	30 kg/m^2
1200 - 2400 mm	2 szt. / kpl.	30 kg/m^2
2400 - 3600 mm	3 szt. / kpl.	25 kg/m^2

Variants and sizes

For sash width from 400 to 1200 mm

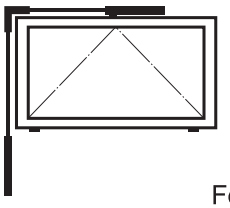

For sash width from 1200 to 2400 mm

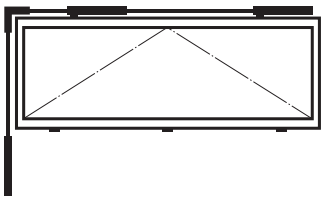

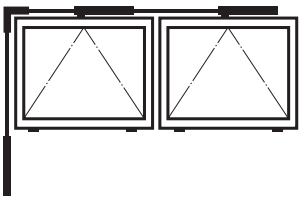

For sash width up to 3600 mm

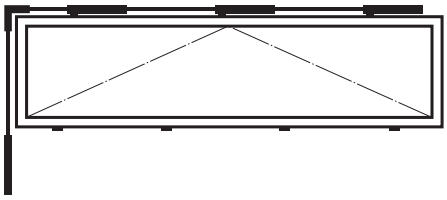

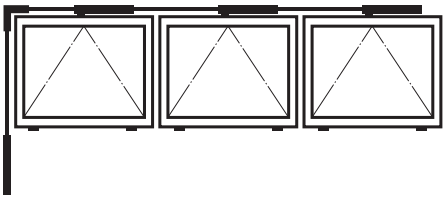

1 - Complete lever
2 - Corner
3 - Scissors
4 - Scissors bracket
5 - Masking frame
6 - Corner guard
7 - Rod ø 8
8 - Guide block
10 - Rod connector
11 - Stop insert pad
12 - Bracket guard
13 - Scissors blockade insert pad

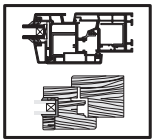

Complete lever

Catalogue No	*Surface - colour*	*Acc. to RAL*
035-003	varnished white	9016
035-004	varnished brown	8017 (*)
035-005	anodized silver	C-0

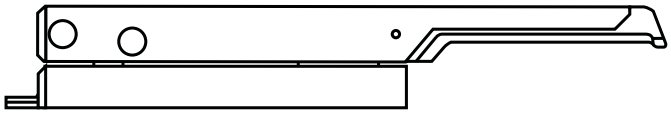

(*) on special order

PACKING

Subassembly		length [mm]	width [mm]	height [mm]	pcs/ box	box weight [kg]
Complete lever	box	300	180	180	24	6,18
	pallet	1200	800			

Complete scissors

Catalogue No	*Surface - colour*	*Acc. to RAL*
035-006	varnished white	9016
035-007	varnished brown	8017 (*)
035-008	anodized silver	C-0

(*) on special order

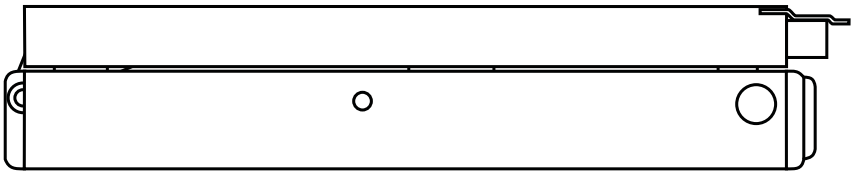

Scissors blockade insert pad

Insert pad is available in set with scissors.

PACKING

Subassembly		length [mm]	width [mm]	height [mm]	pcs/ box	box weight [kg]
Scissors	box	300	180	180	12	5,07
	pallet	1200	800			

LEVER LOCKING ROD TAKT - 150
FOR WINDOWS AND TRANSOMS

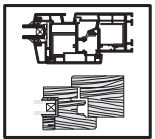

Corner

Catalogue No: **035-001**

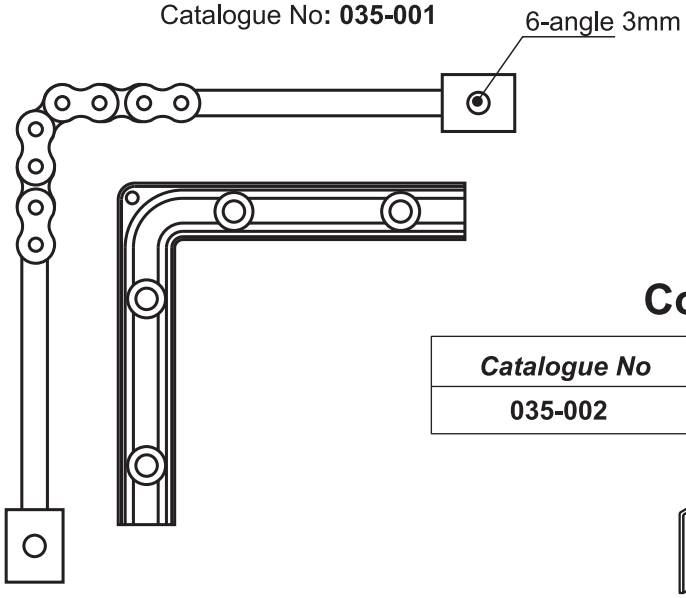

Corner guard

Catalogue No	*Colour*	*Acc. to RAL*
035-002	black	9005

PACKING

Subassembly		length [mm]	width [mm]	height [mm]	pcs/ box	box weight [kg]
Corner	box	410	170	50	45	9,05
	pallet	1200	800			

Rod connector

Catalogue No: **035-019**

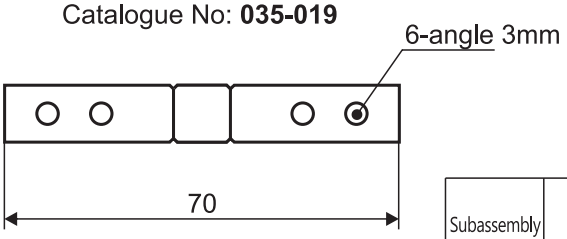

PACKING

Subassembly		length [mm]	width [mm]	height [mm]	pcs/ box	box weight [kg]
Rod connector	box	380	85	50	100	5,71
	pallet	1200	800			

Rod ø 8

Catalogue No	*Length-L [mm]*
035-020	2000
035-009	3000

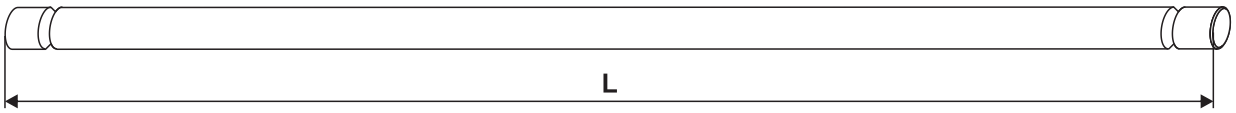

PACKING

Subassembly		length [mm]	width [mm]	height [mm]	pcs/ box	box weight [kg]
Rod L - 3000	box				10	11,50
	pallet					

Note:
Rod length L > 3000 mm is obtained by using rod connector cat No **035-019**

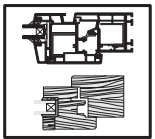

Masking frame

Catalogue No	*Surface-colour*	*Acc. to RAL*
035-012	varnished white	9016
035-013	varnished brown	8017 (*)
035-014	anodized silver	C-0

(*) on special order

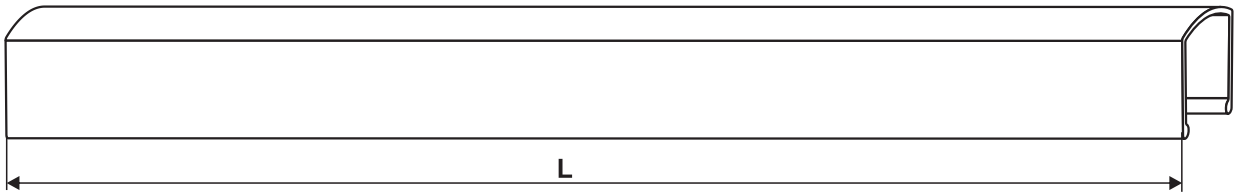

Trade length L=3000 mm

PACKING

Subassembly		lenght [mm]	width [mm]	height [mm]	pcs/ box	box weight [kg]
Masking frame	box	3040	180	80	32	15,10
	pallet					

Guide block

Catalogue No: **035-011**

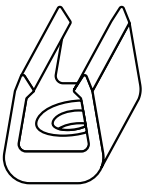

Stop insert pad

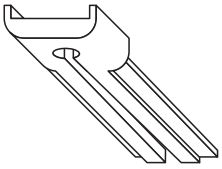

Note:
Stop insert pad is available in set with scissors.

Scissors bracket

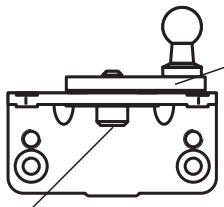

Bracket guard

Colour	*Acc. to RAL*
white	9016
brown	8017
silver	9006

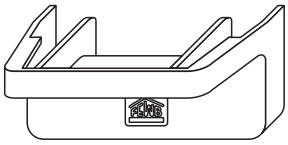

NOTE:
Available in set with scissors.

FITTING INSTRUCTION
LEVER LOCKING ROD TAKT - 150
FOR WINDOWS AND TRANSOMS

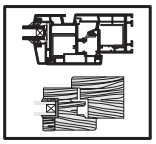

1. Preliminaries.

1.1. Check precision of window manufacturing (sash and frame):
a) difference between diagonals max 4 mm - **obligatory!**
b) slit size on the girth 4 or 12 mm

NOTE: sash weight cannot exceed 80 kg, for maximum filling weight acc. to the table 1.

Table 1.

Sash width Sw [mm]	*Max height Hw of the sash [mm]*	*Number of scissors [pcs]*	*Max filling weight [kg/m²]*
(*) 400 - 800	800	1	30
801 - 1200	800	1	30
1201 - 2400	800	2	30
2401 - 3600	800	3	25

(*) special case - fitting scheme presented in 1.6.

1.2. Prepare hardware elements :
a) lever
b) corner
c) scissors
d) scissors bracket
e) guide blocks
f) rod #8 (rod connector if needed)
g) masking frame
h) scissors blockade insert pad

1.3. Set dimension **D acc. to table 2** or according to possibility of drilling holes.
D=10÷18 mm - jig dimension for assembling (fig 1) cat. No **038-044**

Table 2.

sash height Hw	Min. upper assembling strip	Assembling dimension
[mm]	C [mm]	D [mm]
300 do 400	D+9	12

Fig. 1.

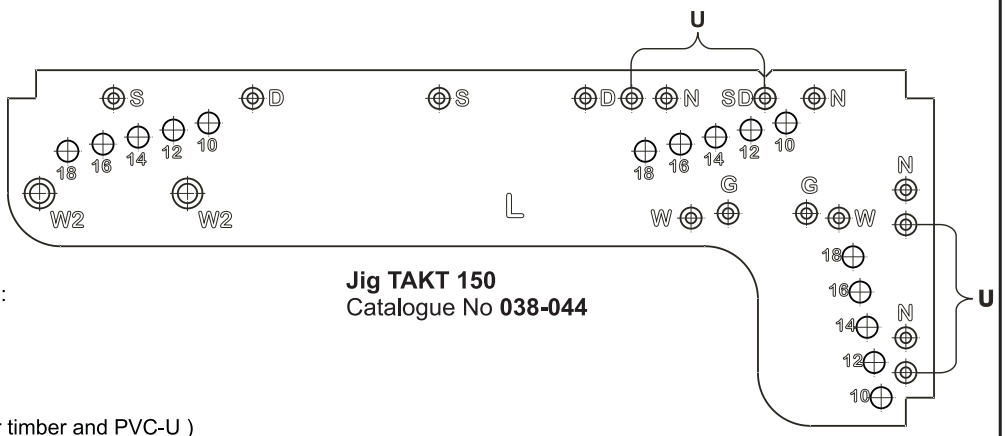

Jig TAKT 150
Catalogue No **038-044**

Marking of the symbols on the jig:

N.....corner
D.....lever
S.....scissors
W..... bracket (coordinates for timber and PVC-U)
W2 ..... bracket (coordinates for aluminium)
L..... left version
P..... right version
U.....holes for holding studs in the corner (it is not necessary to drill in window fitting).
10÷18... assembling dimension D

1.4. Set fitting dimensions A1, A2, A3, LC and make holes for holding screws (scheme presented on fig. 2.) lever, corner, scissors and guide blocks, acc. to the jig (for scissors and lever a stud should be driven on the shorter jig arm). Jig should be based on the mounted sash. Position of the jig presented on fig. 2.

Fig 2.

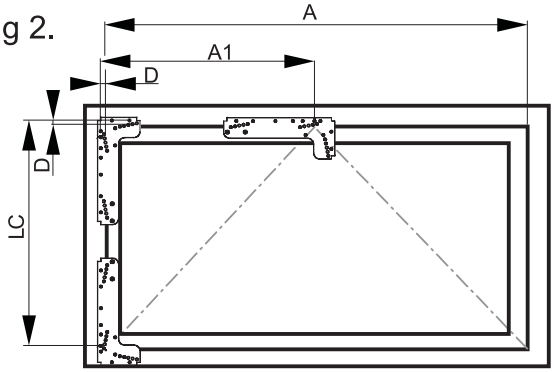

For lever on the left side of the sash
left version **L**

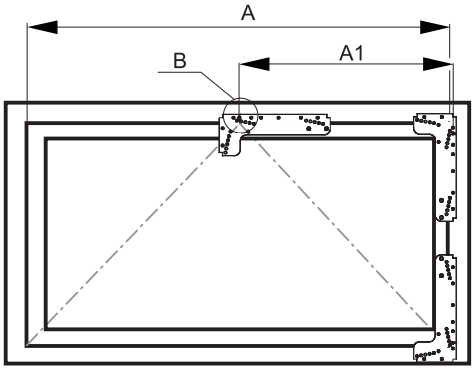

For lever on the right side of the sash
right version **R**

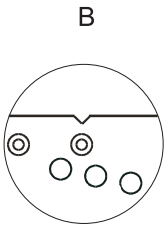

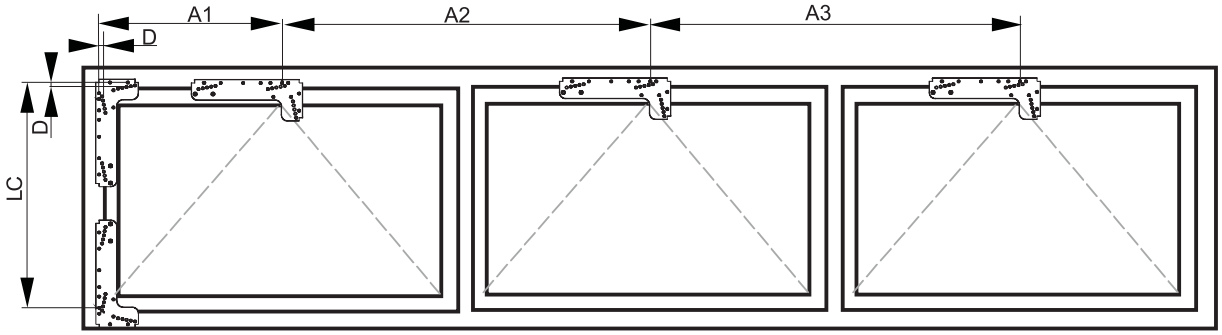

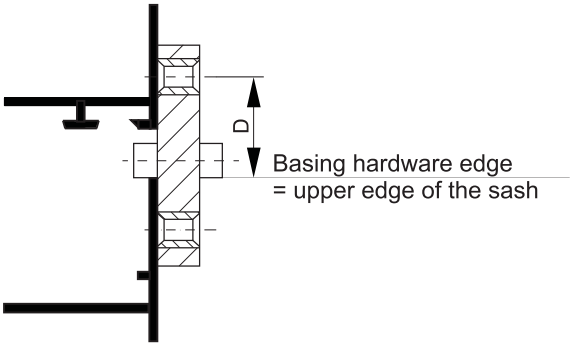

For windows without rebate

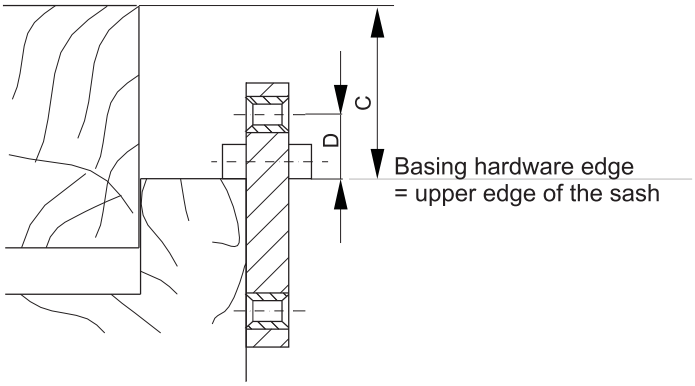

For windows with rebate (Dr and Tw)

1.5. Cut to length connecting rods and masking profiles according to table 3.

Table 3. Fitting scheme for windows 800 mm ÷ 3600 mm wide

Sash width (A) [mm]	A1	A2	A3	M1	M2	M3	MY	LY	LX	Scissors (quantity)
800–1200	A/2+D	—	—	A1-224	—	—	LC-149	LC-149	A1- 60	1
1201–2400	A/4+D	A/2	—	A1-224	A2-225	—	LC-149	LC-149	A1+A2- 60	2
2401–3600	A/6+D	A/3	A/3	A1-224	A2-225	A3-225	LC-149	LC-149	A1+A2+A3- 60	3

where:

A1, A2, A3 - fitting dimensions
M1, M2, M3 - length of horizontal masking profiles
MY - length of vertical masking profile
LY - length of vertical rod
LX - length of horizontal rod
LC - dimension between the last (**lower**) lever hole axis and horizontal fitting axis
A - sash width on the outline

The above sizes are presented on fig. 3

Fig. 3.

NOTE:
Horizontal bar: with scissors in position CLOSED it should flush with scissors latching slider.
Vertical bar: with scissors in position CLOSED it should flush with lower edge of the lever.

NOTE:
In case of intentional moving of scissors bracket axis it is necessary to correct other rods and masking frames dimensions values.

1.6. Fitting scheme for windows 400 ÷ 800 mm wide

Fig. 4.

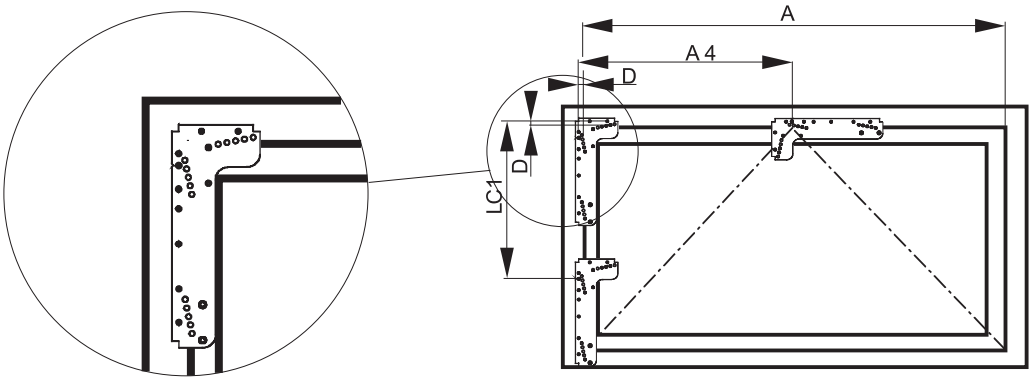

Table 4.

Sash width(A) [mm]	A4	M4	MY1	LY1	Lx1	Scissors (quantity)
400 – 800	A/2+D	A4-27	LC1-165	LC1- 90	A4+80	1

Fig. 5.

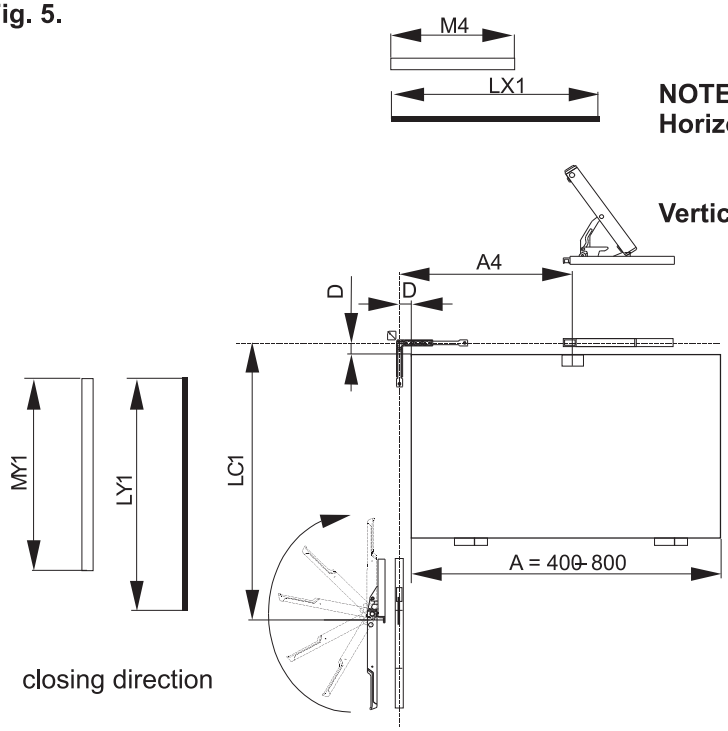

NOTE:
Horizontal bar: with scissors in position CLOSED it should stand out min. 10 mm over scissors guide.
Vertical bar: with scissors in position CLOSED it should level with the lower edge of the lever.

where:

A4 - fitting dimension
M4 - length of the horizontal masking profile
MY1 - length of the vertical masking profile
LY1 - length of vertical bar
LX1 - length of horizontal bar
LC1 - dimension between the last (**lower**) lever hole axis and horizontal fitting axis
A - sash width on the outline

1.7. Scheme of fitting scissors and bracket for different types of window sashes presented on fig. 6

Fig. 6.

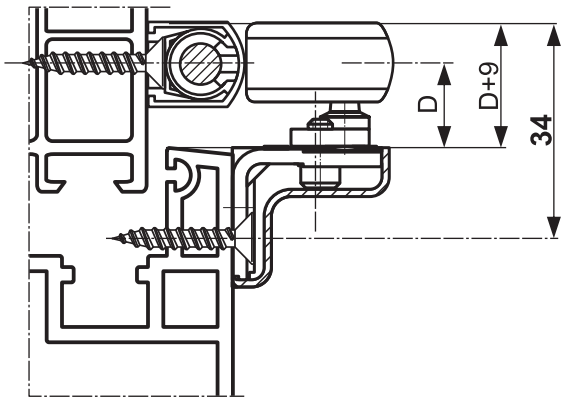

PVC-U sash

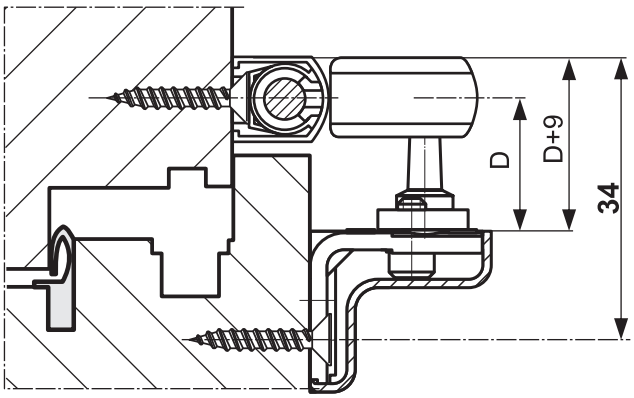

Wooden sash

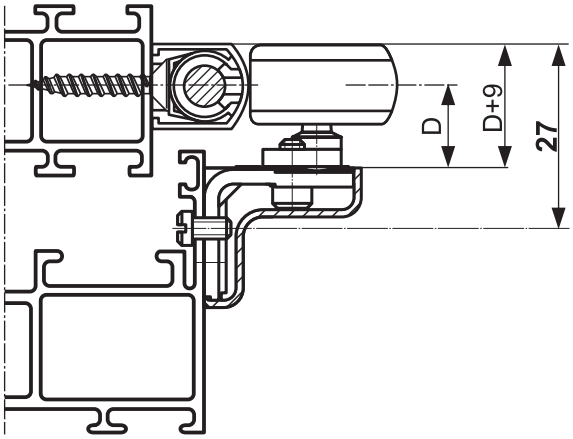

Aluminium sash, **not flushed**

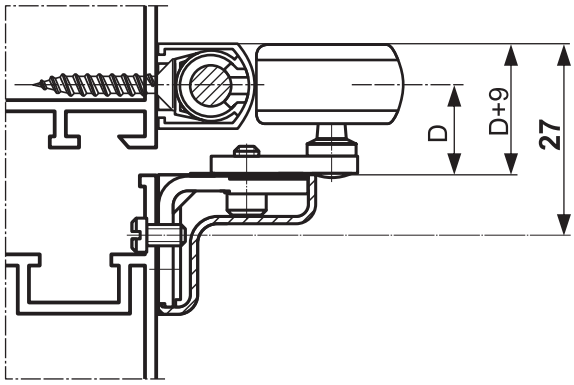

Aluminium sash, **flushed**

Distance of the hinges turning axis from the line passing by the centre of gravity of the window sash must be within10 ÷ 60 mm (**dimension " i " on fig. 7**).

Fig. 7.

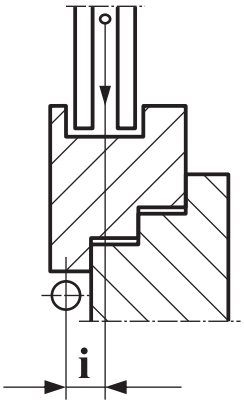

FITTING INSTRUCTION
LEVER LOCKING ROD TAKT - 150
FOR WINDOWS AND TRANSOMS

2.1. Fit the sash in the hinges and check its functioning.

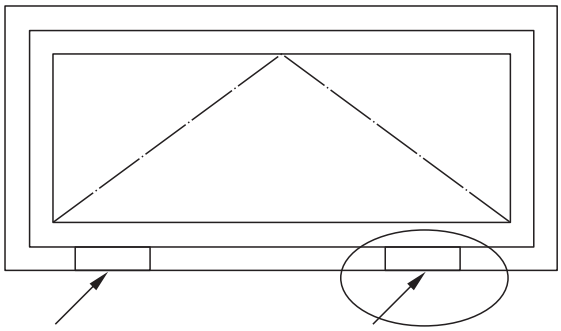

Hinge for tilt windows

white	cat. No **018-001**
brown	cat. No **018-002**
silver	cat. No **018-003**
zinc coat	cat. No **018-004**

(optional other hinges for tilt windows - see ROMB Catalogue, chapter 7)

2.2. Screw on the corner

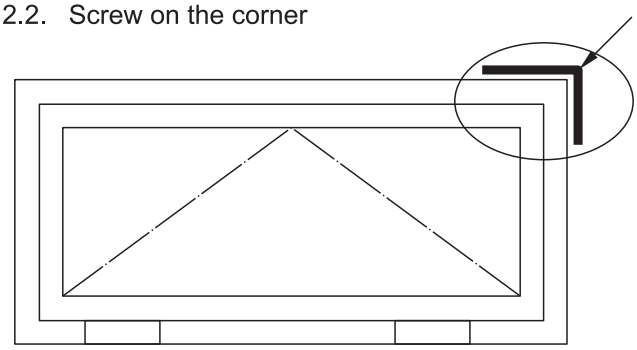

Corner cat. No **035-001**

2.3. Fasten the scissors guide

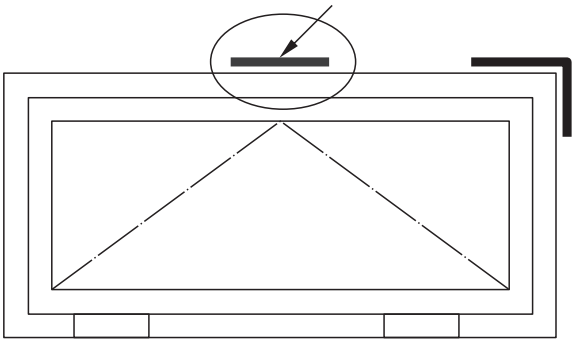

White scissors ..... cat. No **035-006**
Brown scissors ..... cat. No **035-007**
Silver scissors ..... cat. No **035-008**

2.4. Fasten the lever

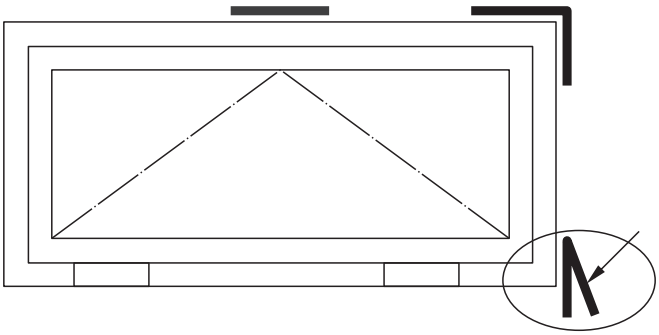

Lever set white .... . cat. No **035-003**
Lever set brown.....cat. No **035-004**
Lever set silver .....cat. No **035-005**

2.5. Screw on the scissors bracket.

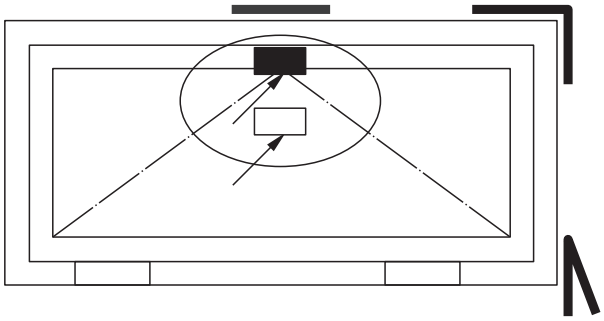

2.6. Fasten guide blocks for the rods.
NOTE: Guide blocks **should be fastened ca 100 mm from the corner ends (D+180 mm)**, additionally in spaces 800 ÷ 1200 mm.

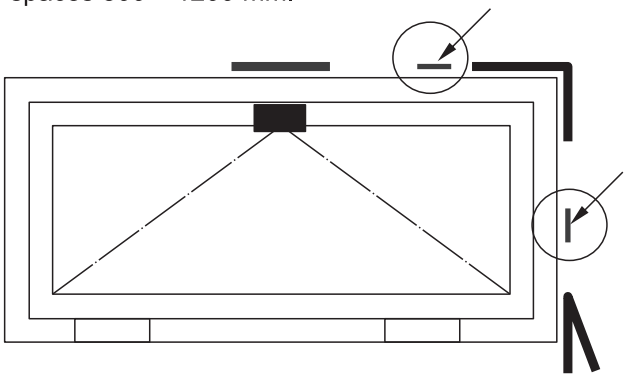

Guide block Cat. No **035-011**

2.7. Connect scissors with guide bar and block it with fastening spring, secure the spring with scissors blockade insert pad.

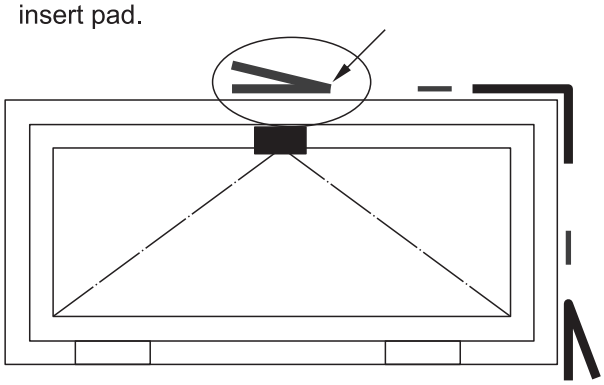

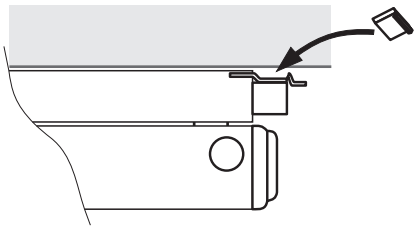

slide from top

2.8. Insert connecting rods through clamping elements of the lever or scissors to the corner arms.
Tighten (**socket screw key 6-angle 3**).

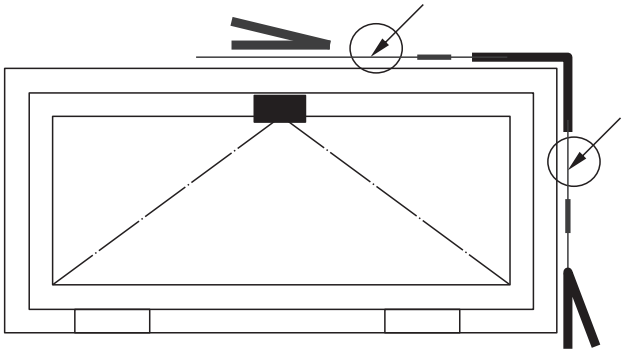

Rod ø8 L=3000 Cat. No **035-010**

2.9. Put lever and scissors into open position and then tighten fastening screws.
Tighten (**socket screw key 6-angle 3**).

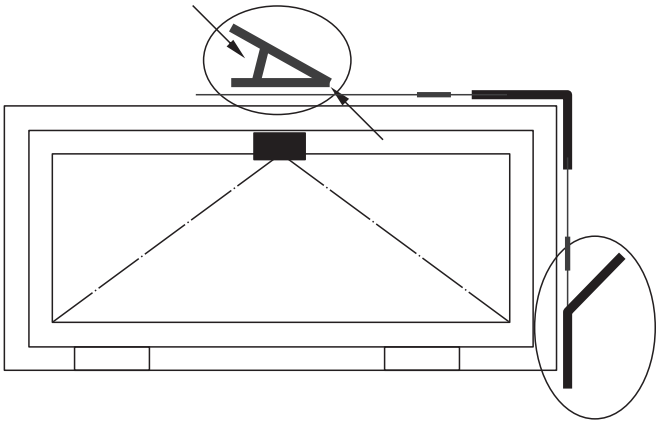

2.10. Fix scissors on the bracket mandrel. The bracket ball should be completely inserted in scissors handle.
The safety button should stand out ca 5 mm above the scissors.

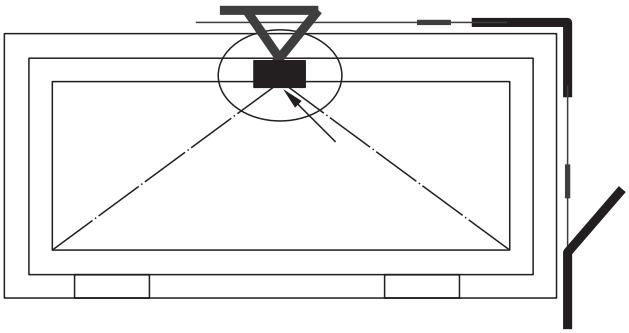

2.11. Adjust the sash fastening.
Close the lever; check the pressure when the sash is closed by turning the bracket mandrel with an open ended spanner 14. Tighten the screw to the sash bracket.
(**socket screw key 6-angle 4**).

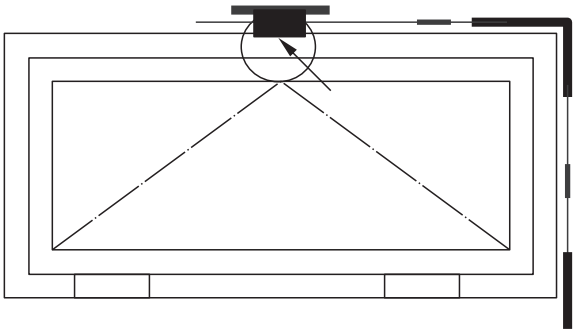

2.12 Check functioning of the hardware. Oil sliding elements and articulated joints.

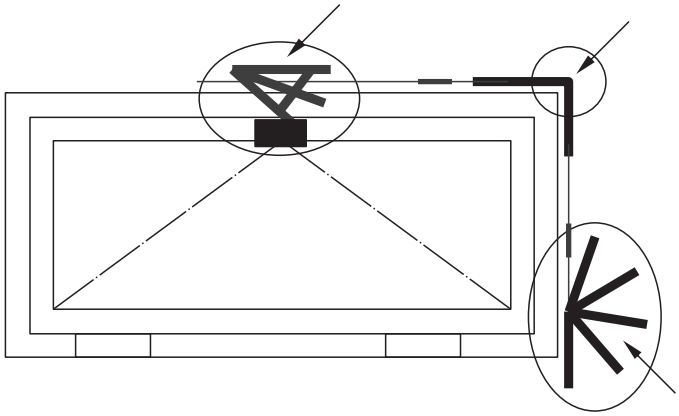

2.13. Fasten masking profile (masking frame) and corner guard

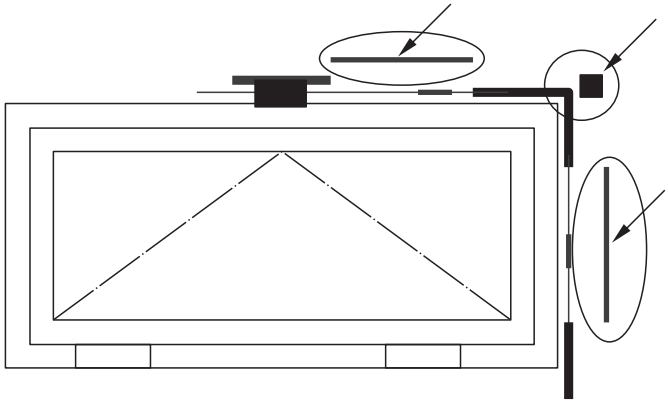

Corner guard (black)
Cat. No **035-002**

Masking frame (white)
Cat. no **035-012**
Masking frame (brown)
Cat. No **035-013**
Masking frame (silver)
Cat. No **035-014**

2.14. Hardware should be additionally completed with scissors stay limiting tilting of window sashes after disconnecting scissors and bracket.

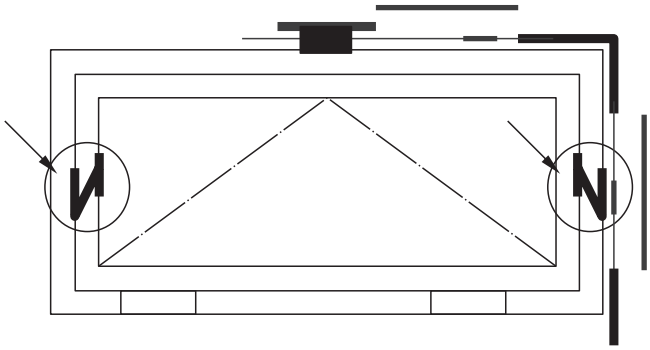

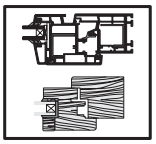

3. Final notes.

3.1. All rules regarding the number of scissors and method of their fitting depending on the sash width should be strictly observed.

3.2. In windows made of light alloys screws for metal should be used to fasten the hardware **(Note: profile wall thickness should be minimum 1,8 mm).**

In PVC-U windows screws should go through **minimum two profiles walls**.
In wooden windows screws for timber should be used.

Recommended screws lengths are presented in the table below .

Hardware element	Fastening screws	
	Wooden windows	Al or PVC-U windows
Corner	4 screws 4x40	4 screws 4,2xL
Scissors	3 screws 4x40	3 screws 4,2xL
Scissors bracket	2 screws 4x25	2 screws M5 or 4,2xL
Lever	3 screws 4x40	3 screws 4,2xL
Guide block	1 screw 4x25	1 screw 4,2xL

Note: L - screw length according to comments in point 3.2.

3.3. **Hardware should be additionally completed with scissors stay limiting tilting of the sash after disconnecting scissors and bracket (safety requirements).**

As an alternative solution it is recommended to use additional scissors to secure window during washing.

3.4. **Flexible connectors are recommended** to use with TAKT-150 hardware in windows where drive should be transmitted through the windowsill or jamb.

Recommended lengths of flexible connectors:

1) L = 700 mm	Cat. No **203-001** (white)
	Cat. No **203-002** (brown)
2) L = 1000 mm	Cat. No **203-003** (white)
	Cat. No **203-004** (brown)
3) L = 1250 mm	Cat. No **203-005** (white)
	Cat. No **203-006** (brown)
Flexible connector's equipment	Cat. No **035-015** (brown)
	Cat. No **035-016** (white)

1. Flexible connector - fitting set
2. Flexible connector

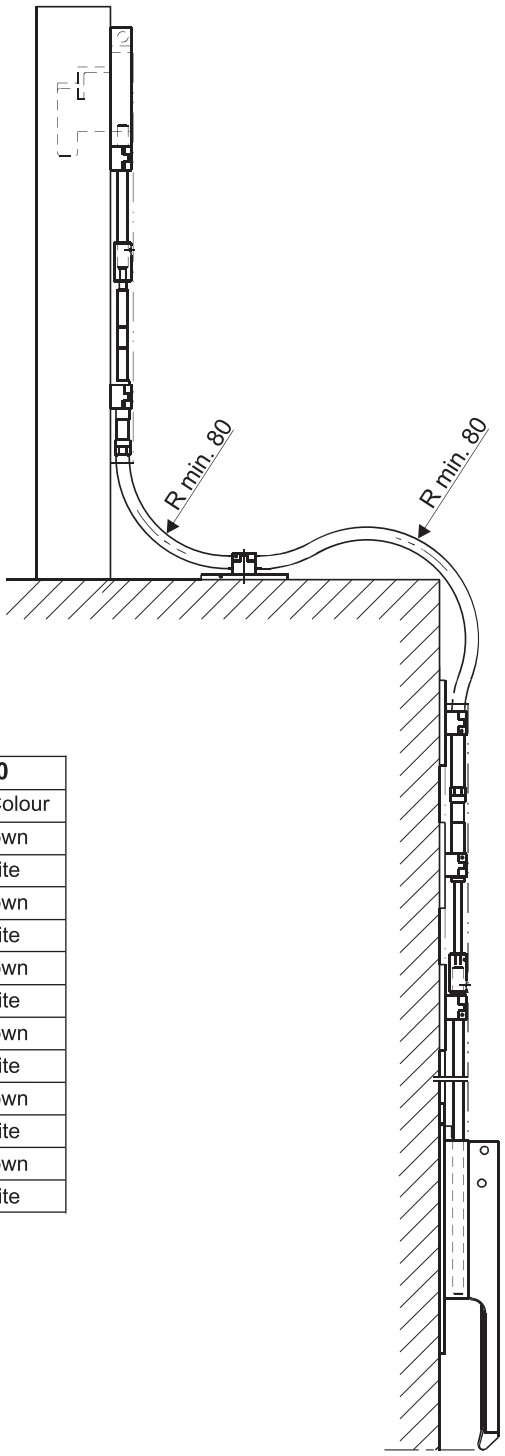

Table 1

Flexible connector fitting set	
Catalogue No	Colour
035-017	brown
035-018	white

Table 2

Lever locking rod TAKT - 150		
Flexible connector	Catalogue No	Colour
200	203-016	brown
	203-015	white
400	203-018	brown
	203-017	white
700	203-008	brown
	203-007	white
1000	203-010	brown
	203-009	white
1300	203-012	brown
	203-011	white
2000	203-014	brown
	203-013	white

NOTE:
Detailed fitting dimensions according to instruction.

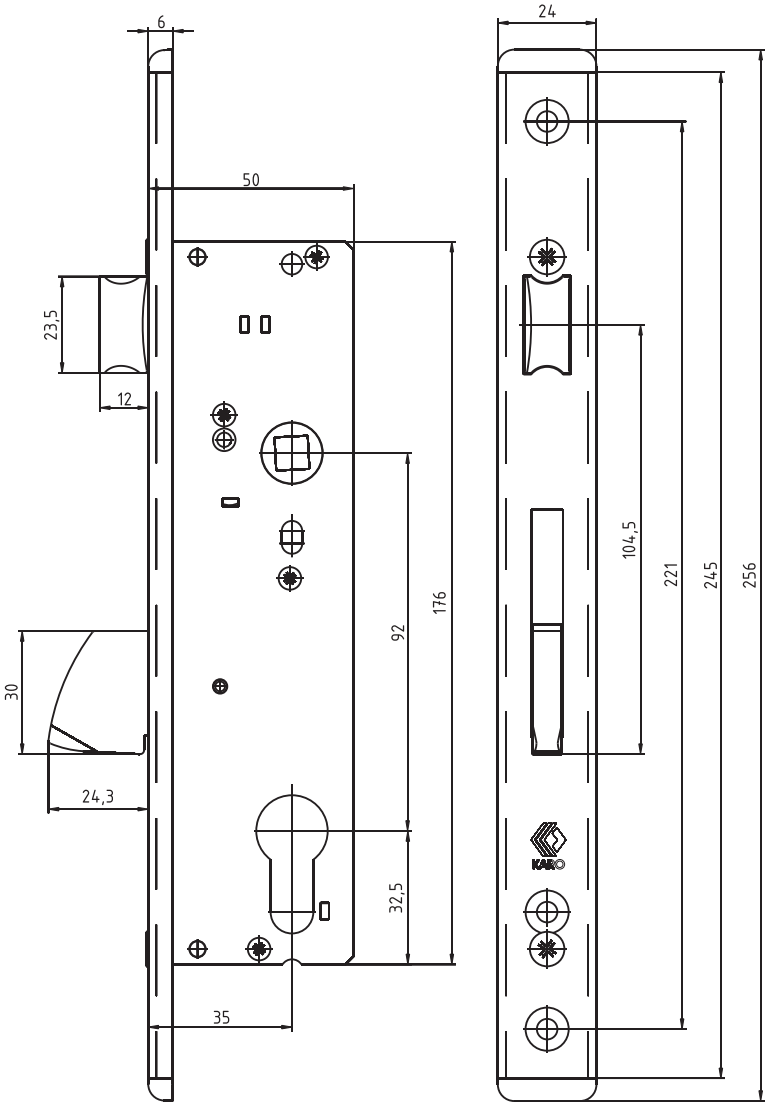

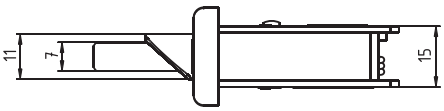

KARO Mortice lock.
For doors made of aluminium and steel profiles.
Latch-bolt.
Faceplate INOX C 6 x 24mm
Dornmass: 35mm
Descending bolt.
Universal right / left
Change of direction possible when the front is unscrewed.
Latch pulled back with a key
With PVC-U finishing elements.

Classification acc. to: PN-EN 12209-2005

3	C	5	0	0	C	2	B	C	2	0

Code	Make	Unit	Description
041-002	INOX	each	KARO LATCH-BOLT MORTICE LOCK **KC-35** (right)
041-001	INOX	each	KARO LATCH-BOLT MORTICE LOCK **KC-35** (left)

Optional:

040-002	INOX	set	ADJUSTABLE STRIKER PLATE - RIGHT **E-C6**
040-001	INOX	set	ADJUSTABLE STRIKER PLATE - LEFT **E-C6**
040-004	INOX	set	ADJUSTABLE STRIKER PLATE - RIGHT **E-C8**
040-003	INOX	set	ADJUSTABLE STRIKER PLATE - LEFT **E-C8**
040-013	INOX	each	FLAT STRIKER PLATE **24Z-245** FOR LATCH-BOLT LOCK
040-016	INOX	each	FLAT STRIKER PLATE **22Z-245** FOR LATCH-BOLT LOCK
040-019	INOX	each	FLAT STRIKER PLATE **22Z-220** FOR LATCH-BOLT LOCK

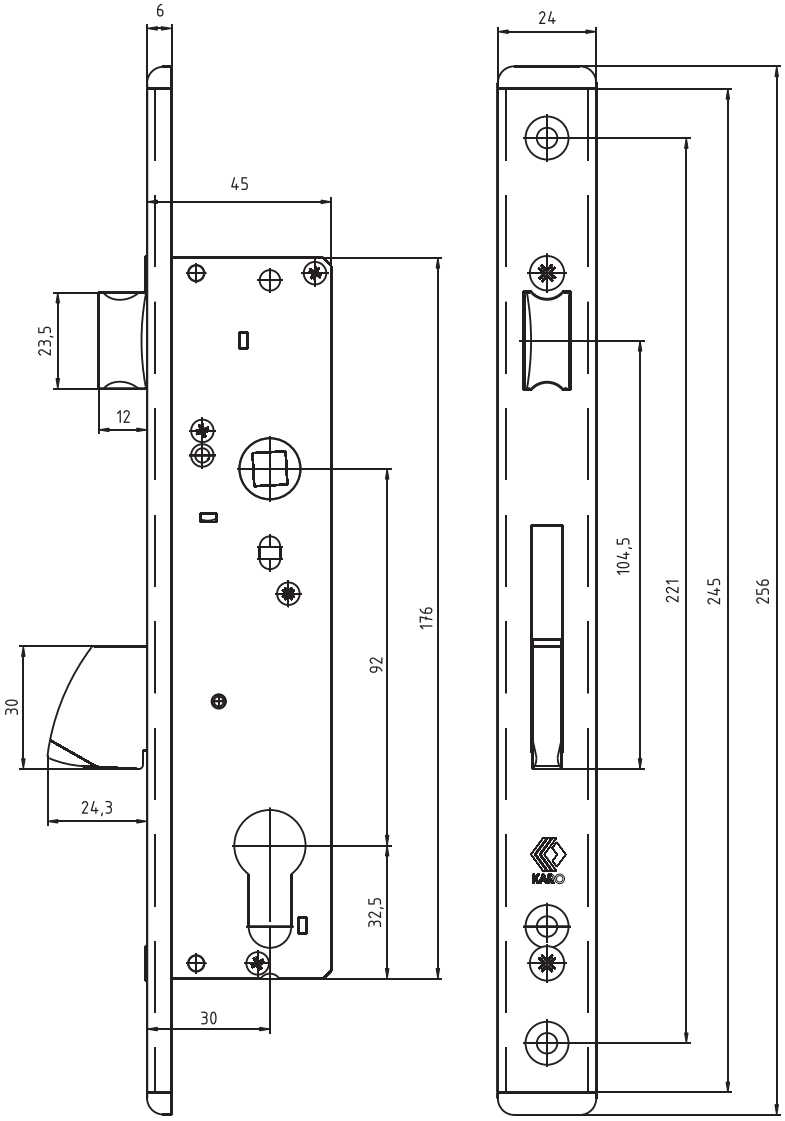

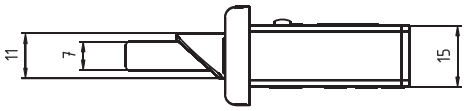

KARO Mortice lock
For doors made of aluminium and steel profiles.
Latch-bolt.
Faceplate INOX U 6 x 24mm
Dornmass: 30mm
Descending bolt.
Universal right / left
Change of direction possible with unscrewed front

Latch pulled back with a key
With PVC-U finishing elements.

Classification acc. to: PN-EN 12209-2005

3	C	5	0	0	C	2	B	C	2	0

Code	Make	Unit	Description
041-006	INOX	each	KARO LATCH-BOLT MORTICE LOCK **KC-30** (right)
041-005	INOX	each	KARO LATCH-BOLT MORTICE LOCK **KC-30** (left)

Optional:

040-002	INOX	set	ADJUSTABLE STRIKER PLATE - RIGHT **E-C6**
040-001	INOX	set	ADJUSTABLE STRIKER PLATE - LEFT **E-C6**
040-004	INOX	set	ADJUSTABLE STRIKER PLATE - RIGHT **E-C8**
040-003	INOX	set	ADJUSTABLE STRIKER PLATE - LEFT **E-C8**
040-013	INOX	each	FLAT STRIKER PLATE **24Z-245** FOR LATCH BOLT LOCK
040-016	INOX	each	FLAT STRIKER PLATE **22Z-245** FOR LATCH BOLT LOCK
040-019	INOX	each	FLAT STRIKER PLATE **22Z-220** FOR LATCH BOLT LOCK

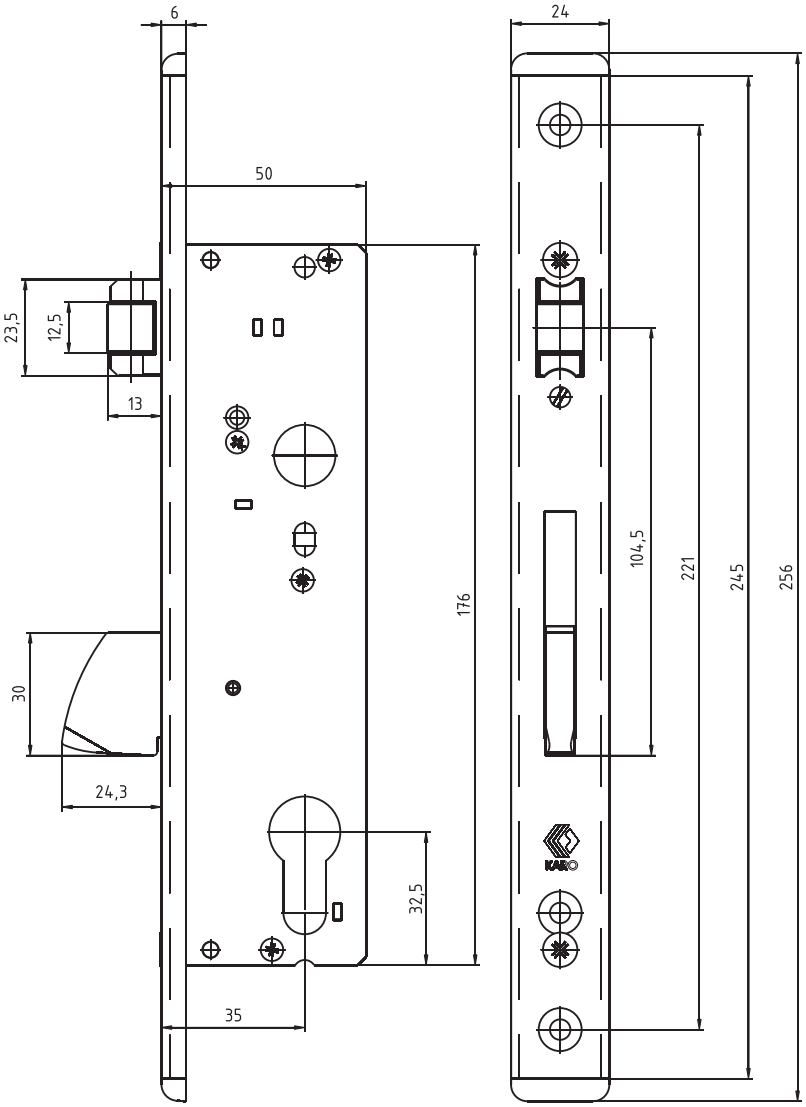

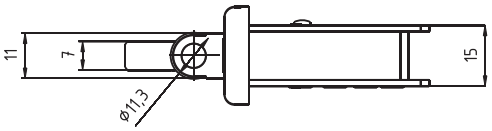

KARO Mortice lock
For doors made of aluminium and steel profiles.
Roller-bolt
Faceplate INOX C 6 x 24mm
Dornmass: 35mm
Descending bolt
Universal right / left
With PVC-U finishing elements

Classification acc. to: PN EN 12209 2005

3	C	5	0	0	C	2	B	A	0	0

Code	Make	Unit	Description
041-003	INOX	each	KARO ROLLER-BOLT MORTICE LOCK **KC-35**

Optional:

040-002	INOX	set	ADJUSTABLE STRIKER PLATE RIGHT **E-C6**
040-001	INOX	set	ADJUSTABLE STRIKER PLATE LEFT **E-C6**
040-004	INOX	set	ADJUSTABLE STRIKER PLATE RIGHT **E-C8**
040-003	INOX	set	ADJUSTABLE STRIKER PLATE LEFT **E-C8**
040-014	INOX	each	FLAT STRIKER PLATE **24R-245** OF ROLLER LOCK
040-017	INOX	each	FLAT STRIKER PLATE **22R-245** OF ROLLER LOCK
040-020	INOX	each	FLAT STRIKER PLATE **22R-220** OF ROLLER LOCK

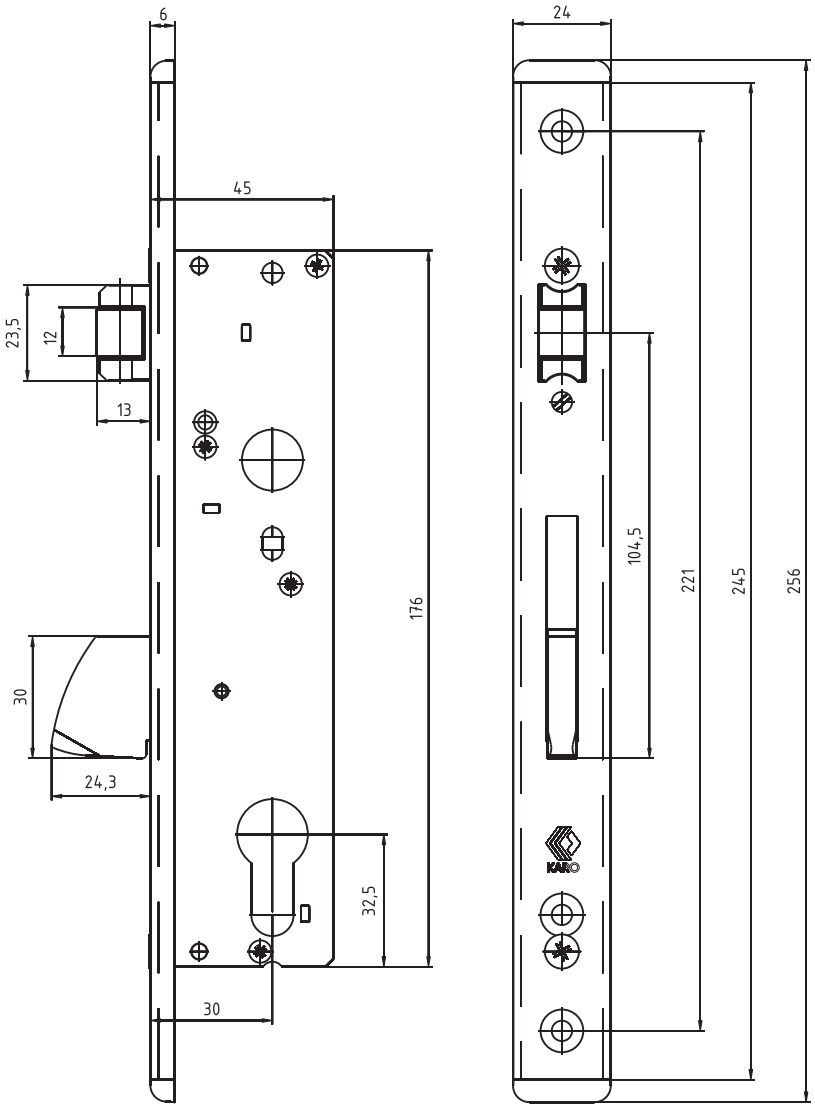

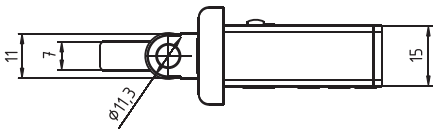

KARO mortice lock
For doors made of aluminium and steel profiles.
Roller-bolt
Faceplate INOX C 6 x 24mm
Dornmass: 30mm
Descending bolt
Universal left / right.
With PVC-U finishing elements.

Classified acc. to: PN-EN 12209-2005

3	C	5	0	0	C	2	B	A	0	0

Code	Type	Unit	Description
041-007	INOX	each	KARO ROLLER-BOLT MORTICE LOCK **KC-30**

Optional:

040-002	INOX	set	ADJUSTABLE STRIKER PLATE - RIGHT **E-C6**
040-001	INOX	set	ADJUSTABLE STRIKER PLATE - LEFT **E-C6**
040-004	INOX	set	ADJUSTABLE STRIKER PLATE - RIGHT **E-C8**
040-003	INOX	set	ADJUSTABLE STRIKER PLATE - LEFT **E-C8**
040-014	INOX	each	FLAT STRIKER PLATE **24R-245** FOR ROLLER LOCK
040-017	INOX	each	FLAT STRIKER PLATE **22R-245** FOR ROLLER LOCK
040-020	INOX	each	FLAT STRIKER PLATE **22R-220** FOR ROLLER LOCK

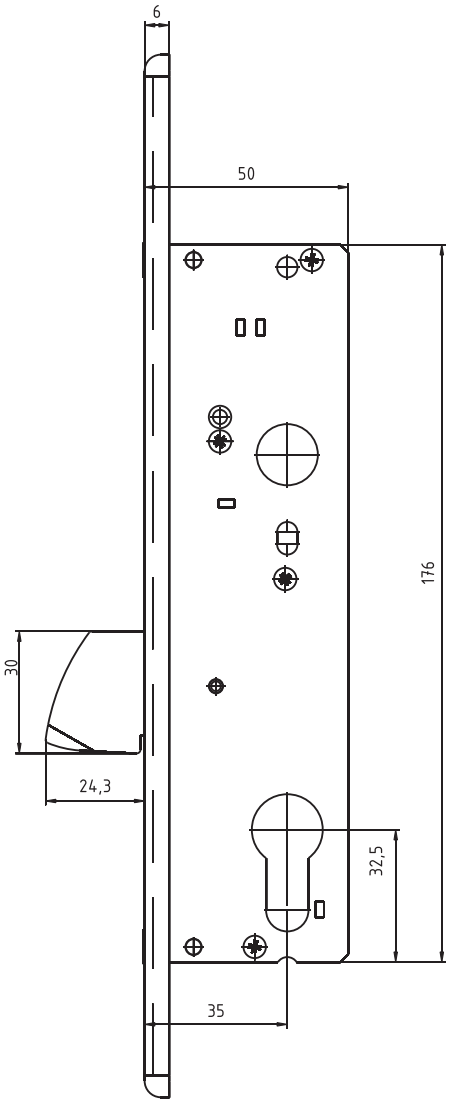

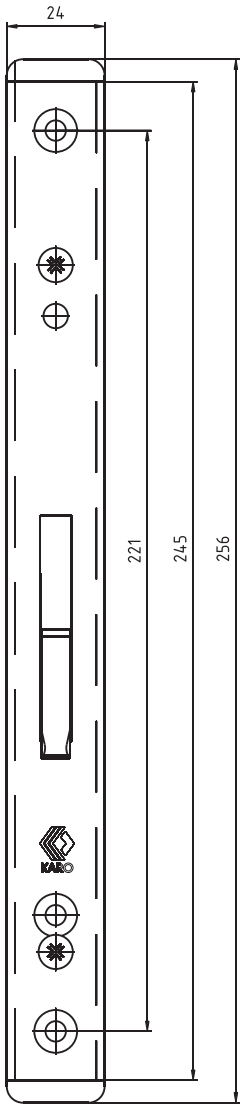

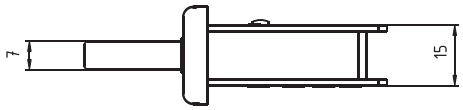

KARO mortice lock
For doors made of aluminium and steel profiles.
Bolt.
Faceplate INOX U 6 x 24mm
Dornmass: 35mm
Descending bolt
Universal right / left
With PVC-U finishing elements.

Classified acc. to: PN-EN 12209-2005

3	C	5	0	0	C	2	B	A	0	0

Code	Make	Unit	Description
041-004	INOX	each	KARO BOLT MORTICE LOCK **KC-35**

Optional:

040-005	INOX	set	STRIKER PLATE **C6**
040-006	INOX	set	STRIKER PLATE **C8**
040-015	INOX	each	FLAT STRIKER PLATE **24D-180**
040-018	INOX	each	FLAT STRIKER PLATE **22D-180**
040-021	INOX	each	FLAT STRIKER PLATE **22D-156**

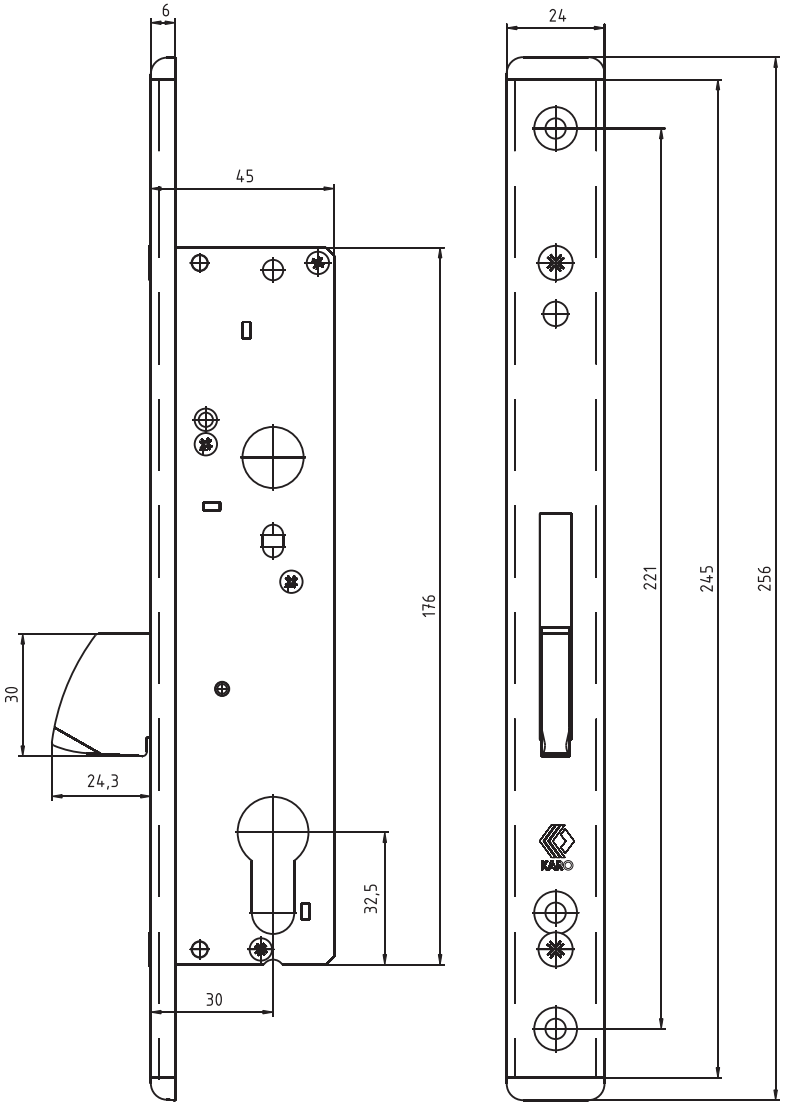

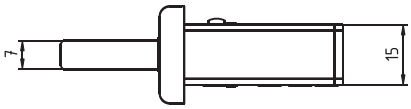

KARO mortice lock
For doors made of aluminium and steel profiles.
Bolt.
Faceplate INOX U 6 x 24mm
Dornmass: 30mm
Descending bolt
Universal right / left
With PVC-U finishing elements.

Classified acc. to: PN-EN 12209-2005

3	C	5	0	0	C	2	B	A	0	0

Code	Make	Unit	Description
041-008	INOX	each	KARO BOLT MORTICE LOCK **KC-30**

Optional:

040-005	INOX	set	STRIKER PLATE **C6**
040-006	INOX	set	STRIKER PLATE **C8**
040-015	INOX	each	FLAT STRIKER PLATE **24D-180**
040-018	INOX	each	FLAT STRIKER PLATE **22D-180**
040-021	INOX	each	FLAT STRIKER PLATE **22D-156**

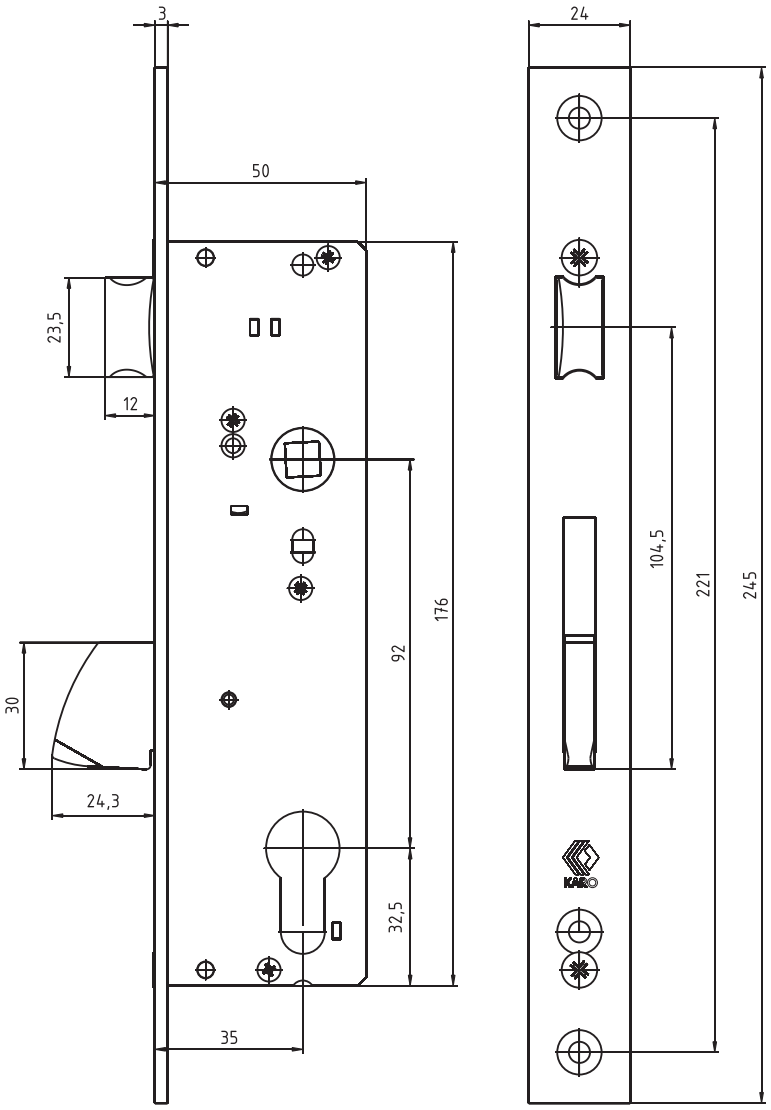

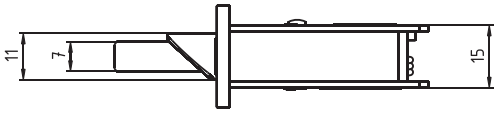

KARO mortice lock
For doors made of aluminium and steel profiles.
Latch - bolt
Faceplate INOX 3x24mm
Dornmass: 35mm
Descending bolt
Universal right / left.
Change of direction possible when front is unscrewed
Latch pulled back with the key

Classified acc. to: PN-EN 12209-2005

3	C	5	0	0	C	2	B	C	2	0

Code	Make	Unit	Description
041-009	INOX	each	KARO LATCH BOLT MORTICE LOCK **KP-35** (right)
041-010	INOX	each	KARO LATCH BOLT MORTICE LOCK **KP-35** (left)

Optional:

040-002	INOX	set	ADJUSTABLE STRIKER PLATE - RIGHT **E-C6**
040-001	INOX	set	ADJUSTABLE STRIKER PLATE- LEFT **E-C6**
040-004	INOX	set	ADJUSTABLE STRIKER PLATE - RIGHT **E-C8**
040-003	INOX	set	ADJUSTABLE STRIKER PLATE - LEFT **E-C8**
040-013	INOX	each	FLAT STRIKER PLATE **24Z-245** FOR LATCH-BOLT LOCK
040-016	INOX	each	FLAT STRIKER PLATE **22Z-245** FOR LATCH-BOLT LOCK
040-019	INOX	each	FLAT STRIKER PLATE **22Z-220** FOR LATCH-BOLT LOCK

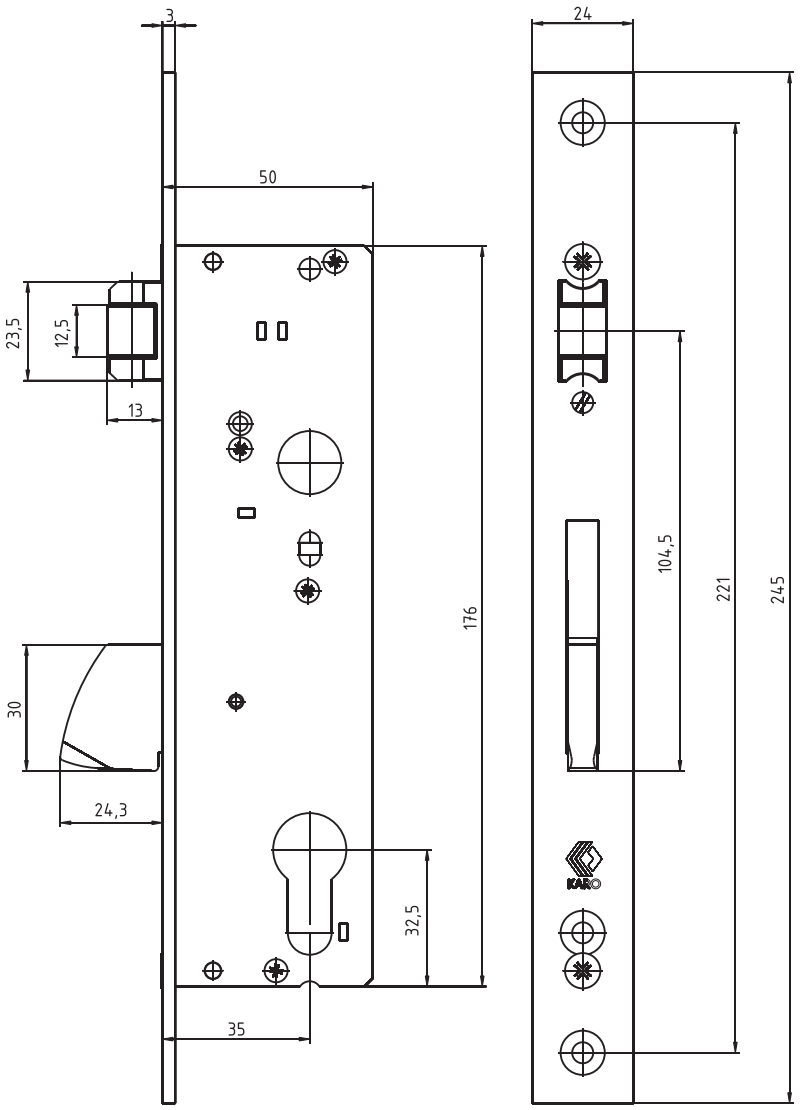

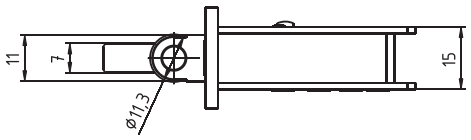

KARO mortice lock
For doors made of aluminium and steel profiles.
Roller-bolt.
Faceplate INOX 3 x 24mm
Dornmass: 35mm
Descending bolt
Universal right / left.

Classified acc. to: PN-EN 12209-2005

3	C	5	0	0	C	2	B	A	0	0

Code	Make	Unit	Description
041-011	INOX	each	KARO ROLLER-BOLT MORTICE LOCK **KP-35**

Optional:

040-002	INOX	set	ADJUSTABLE STRIKER PLATE - RIGHT **E-C6**
040-001	INOX	set	ADJUSTABLE STRIKER PLATE LEFT **E-C6**
040-004	INOX	set	ADJUSTABLE STRIKER PLATE - RIGHT **E-C8**
040-003	INOX	set	ADJUSTABLE STRIKER PLATE - LEFT **E-C8**
040-014	INOX	each	FLAT STRIKER PLATE **24R-245** FOR ROLLER LOCK
040-017	INOX	each	FLAT STRIKER PLATE **22R-245** FOR ROLLER LOCK
040-020	INOX	each	FLAT STRIKER PLATE **22R-220** FOR ROLLER LOCK

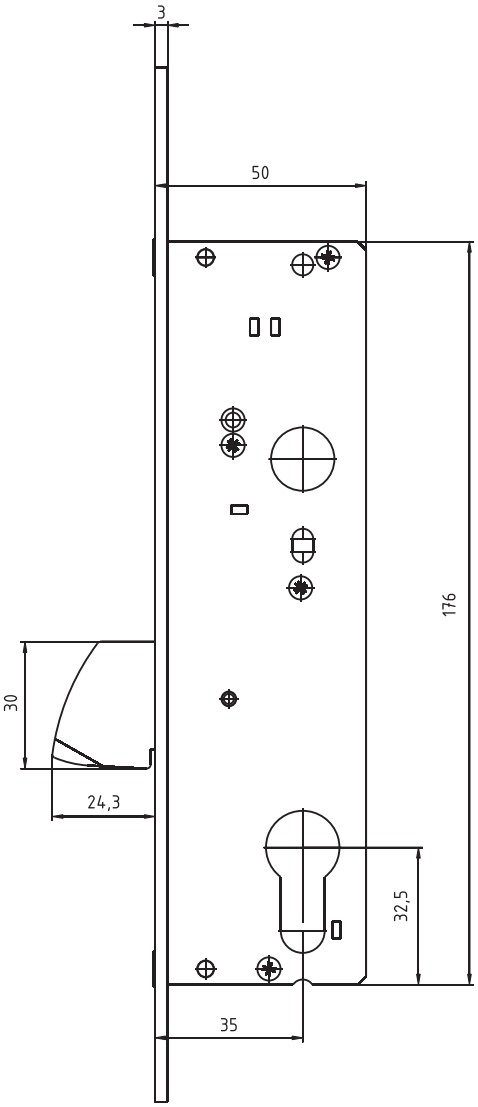

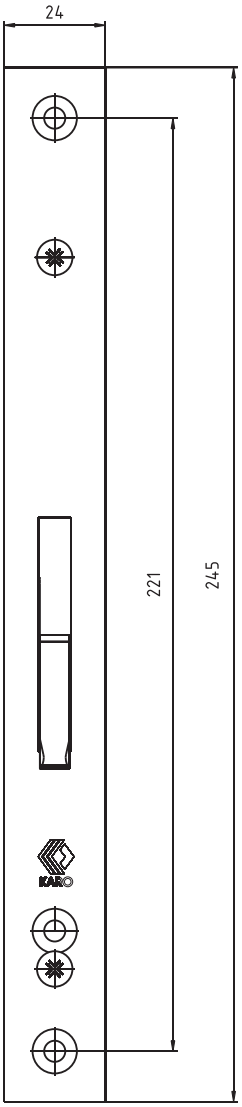

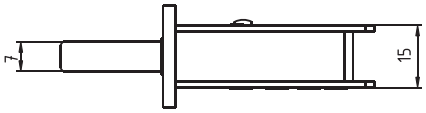

KARO mortice lock
For doors made of aluminium and steel profiles.
Bolt.
Faceplate INOX 3 x 24mm
Dornmass: 35mm
Descending bolt

Classified acc. to: PN-EN 12209-2005

3	C	5	0	0	C	2	B	A	0	0

Code	Make	Unit	Description
041-012	INOX	each	KARO BOLT MORTICE LOCK **KP-35**

Optional:

040-005	INOX	set	STRIKER PLATE **C6**
040-006	INOX	set	STRIKER PLATE **C8**
040-015	INOX	each	FLAT STRIKER PLATE **24D-180**
040-018	INOX	each	FLAT STRIKER PLATE **22D-180**
040-013	INOX	each	FLAT STRIKER PLATE **22D-156**

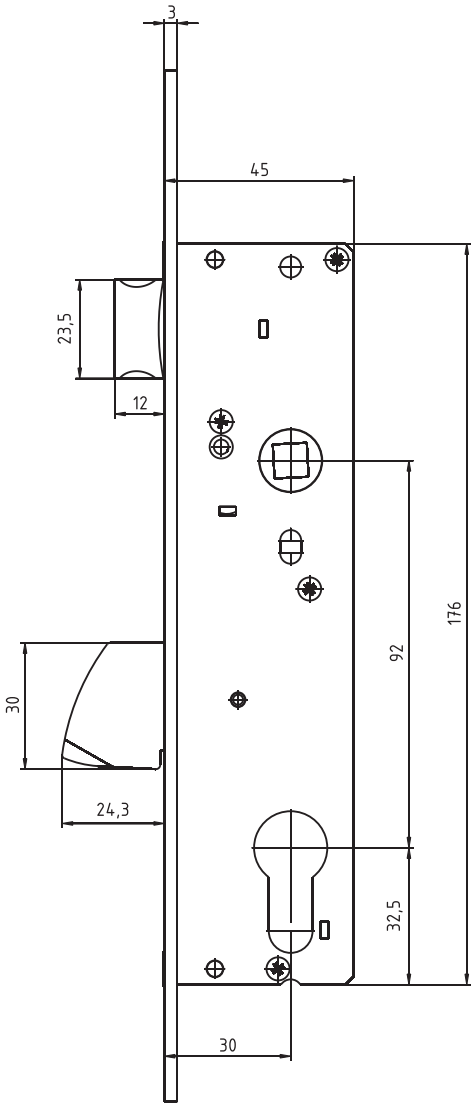

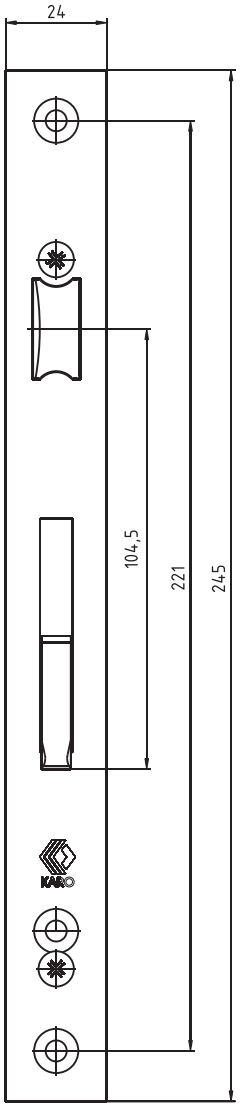

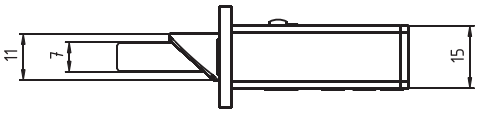

KARO mortice lock
For doors made of aluminium and steel profiles.
Latch-bolt
Faceplate INOX 3x24mm
Dornmass: 30mm
Descending bolt
Universal right / left
Change of direction possible when front is unscrewed.
Bolt pulled back with the key.

Classified acc. to: PN-EN 12209-2005

3	C	5	0	0	C	2	B	C	2	0

Code	Make	Unit	Description
041-014	INOX	each	KARO LATCH-BOLT MORTICE LOCK **KP-30** (right)
041-013	INOX	each	KARO LATCH-BOLT MORTICE LOCK **KP-30** (left)

Optional:

040-002	INOX	set	ADJUSTABLE STRIKER PLATE - RIGHT **E-C6**
040-001	INOX	set	ADJUSTABLE STRIKER PLATE - LEFT **E-C6**
040-004	INOX	set	ADJUSTABLE STRIKER PLATE - RIGHT **E-C8**
040-003	INOX	set	ADJUSTABLE STRIKER PLATE - LEFT **E-C8**
040-013	INOX	each	FLAT STRIKER PLATE **24Z-245** FOR LATCH-BOLT LOCK
040-016	INOX	each	FLAT STRIKER PLATE **22Z-245** FOR LATCH-BOLT LOCK

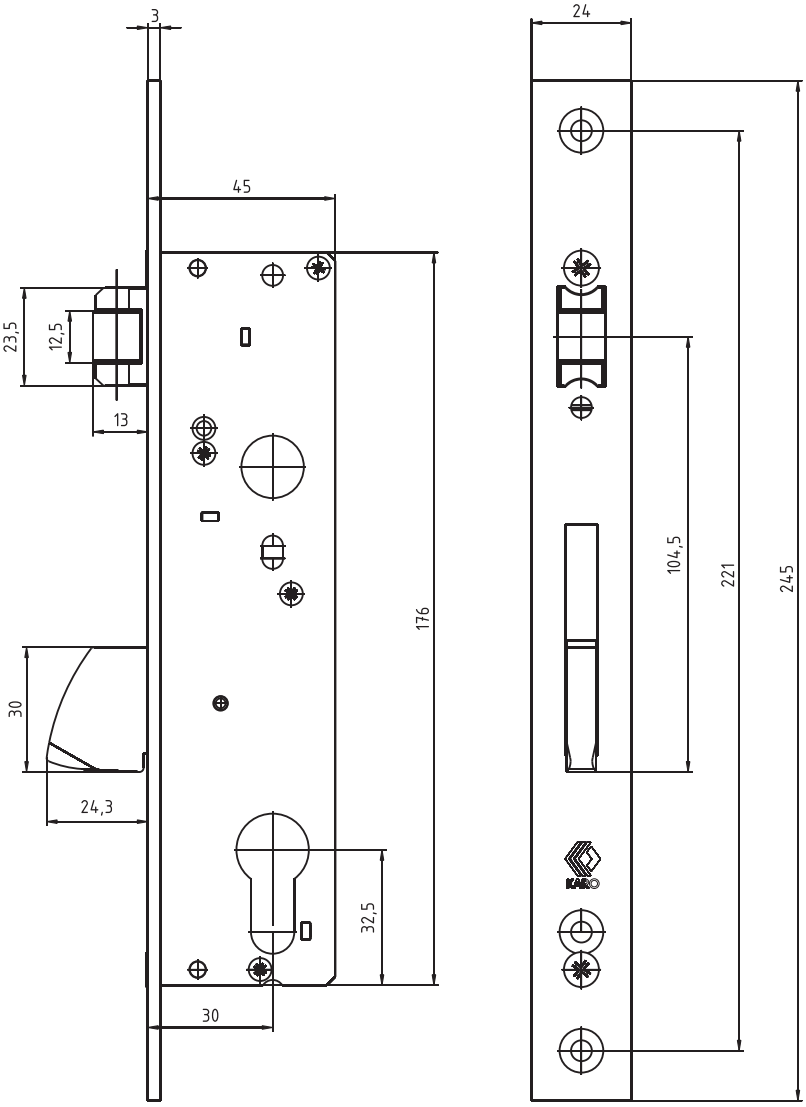

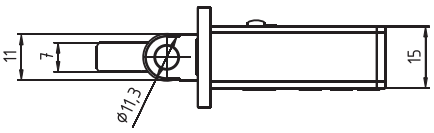

KARO mortice lock
For doors made of aluminium and steel profiles.
Roller-bolt.
Faceplate INOX 3 x 24mm
Dornmass: 30mm
Descending bolt.
Universal right / left.

Classified acc. to: PN-EN 12209-2005

3	C	5	0	0	C	2	B	A	0	0

Code	Make	Unit	Description
041-015	INOX	each	KARO ROLLER-BOLT MORTICE LOCK **KP-30**

Optional:

040-002	INOX	set	ADJUSTABLE STRIKER PLATE - RIGHT **E-C6**
040-001	INOX	set	ADJUSTABLE STRIKER PLATE - LEFT **E-C6**
040-004	INOX	set	ADJUSTABLE STRIKER PLATE - RIGHT **E-C8**
040-003	INOX	set	ADJUSTABLE STRIKER PLATE - LEFT **E-C8**
040-014	INOX	each	FLAT STRIKER PLATE **24R-245** ROLLER LOCK
040-017	INOX	each	FLAT STRIKER PLATE **22R-245** ROLLER LOCK
040-020	INOX	set	FLAT STRIKER PLATE **22R-220** ROLLER LOCK

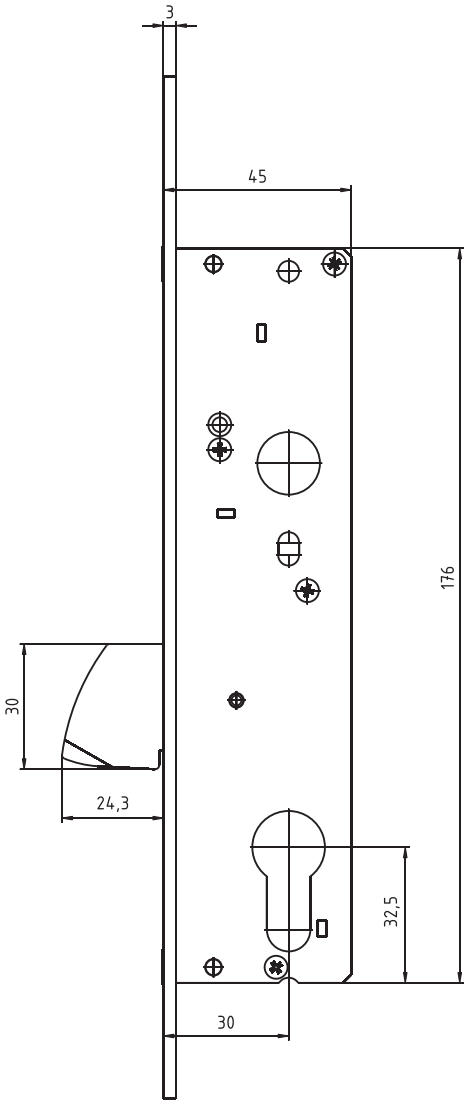

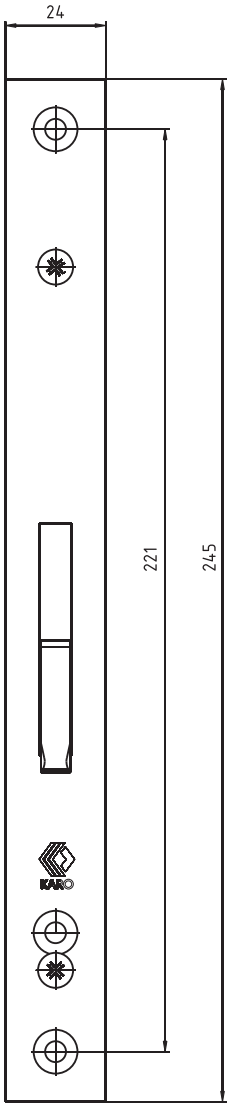

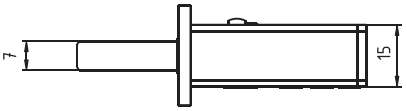

KARO mortice lock
For doors made of aluminium and steel profiles.
Bolt.
Faceplate INOX 3 x 24mm
Dornmass: 30mm
Descending bolt.

Classified acc. to: PN-EN 12209-2005

3	C	5	0	0	C	2	B	A	0	0

Code	Make	Unit	Description
041-016	INOX	each	KARO BOLT MORTICE LOCK **KP-30**

Optional:

040-005	INOX	set	STRIKER PLATE **C6**
040-006	INOX	set	STRIKER PLATE **C8**
040-015	INOX	each	FLAT STRIKER PLATE **24D-180**
040-018	INOX	each	FLAT STRIKER PLATE **22D-180**
040-021	INOX	set	FLAT STRIKER PLATE **22D-156**

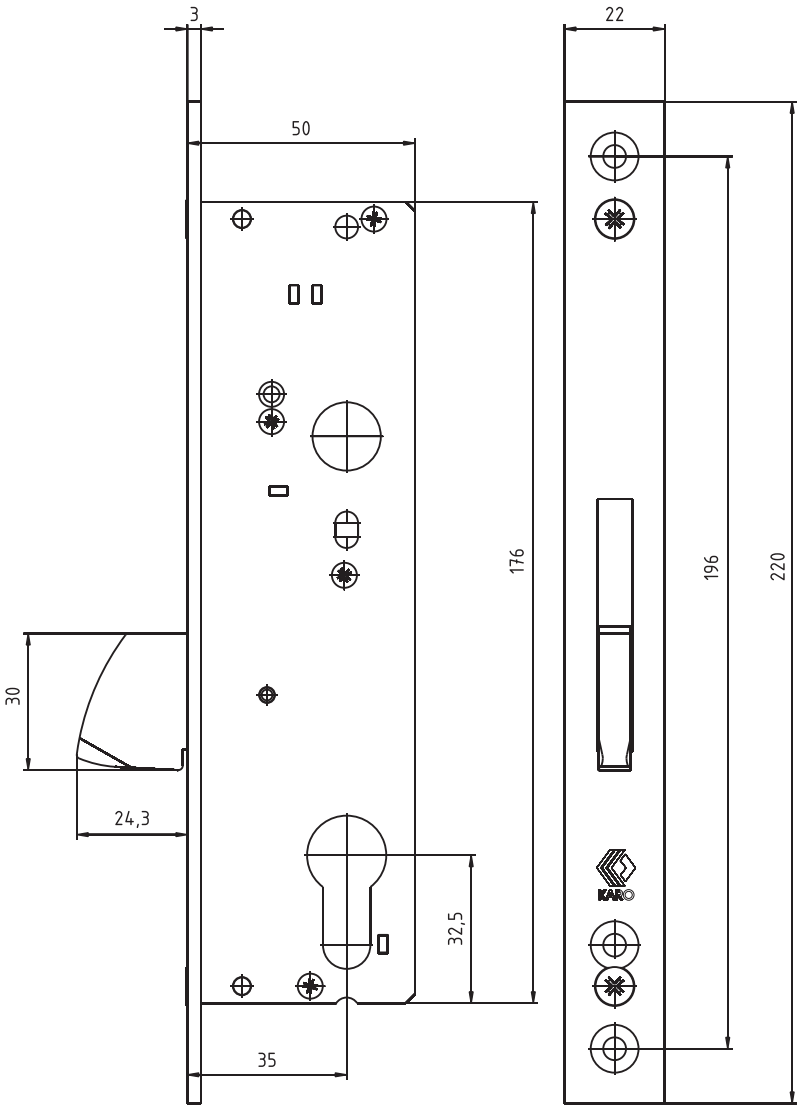

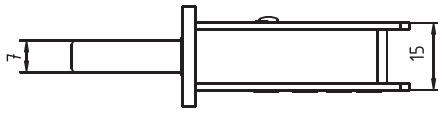

KARO mortice lock
For doors made of aluminium and steel profiles.
Bolt.
Faceplate INOX 3 x 22mm
Dornmass: 35mm
Descending bolt.

Classified acc. to: PN-EN 12209-2005

3	C	5	0	0	C	2	B	A	0	0

Code	Make	Unit	Description
041-020	INOX	each	KARO BOLT MORTICE LOCK **KP22-35**

Optional:

040-021	INOX	set	FLAT STRIKER PLATE **22D-156**

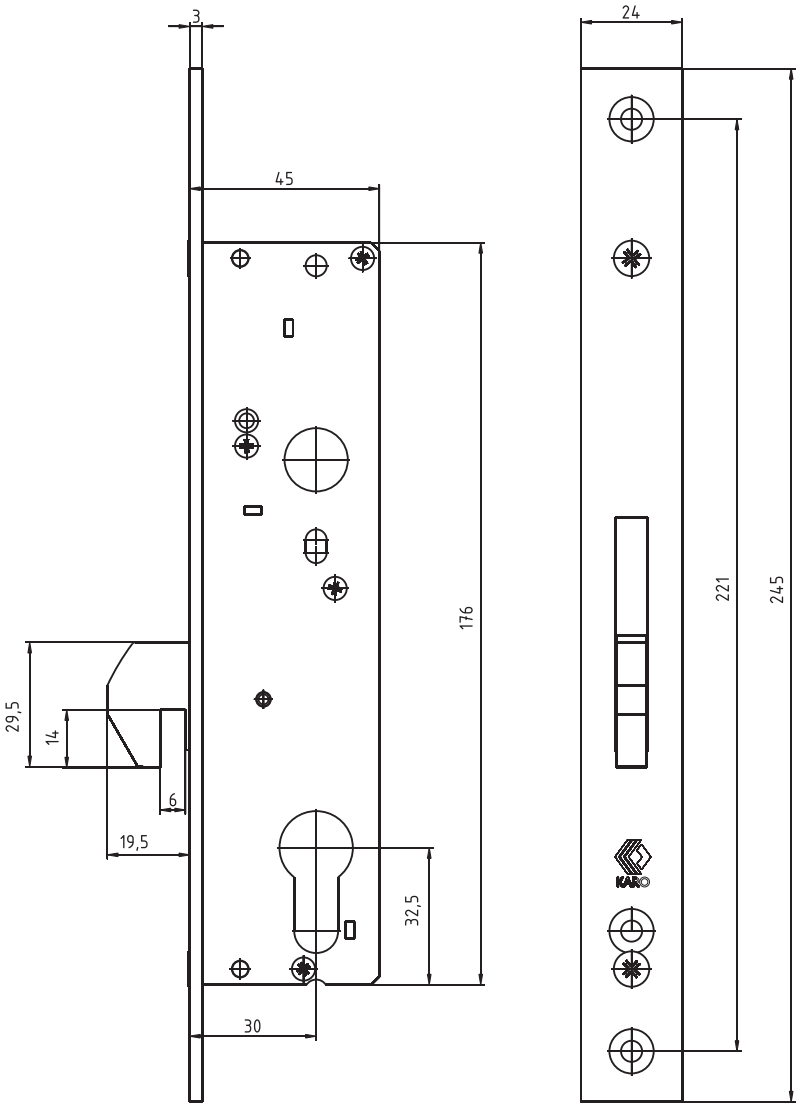

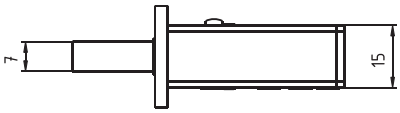

KARO mortice lock
For doors made of aluminium and steel profiles.
Bolt.
Lock clearance 6mm
Faceplate INOX 3 x 24mm
Dornmass: 30mm
Descending bolt

Classified acc. to: PN-EN 12209-2005

3	C	5	0	0	C	2	B	A	0	0

Code	Make	unit	Description
041-031	INOX	each	KARO BOLT MORTICE LOCK **KP-30 h6**

Optional:

040-005	INOX	set	STRIKER PLATE **C6**
040-006	INOX	set	STRIKER PLATE **C8**
040-015	INOX	each	FLAT STRIKER PLATE **24D-180**
040-018	INOX	each	FLAT STRIKER PLATE **22D-180**

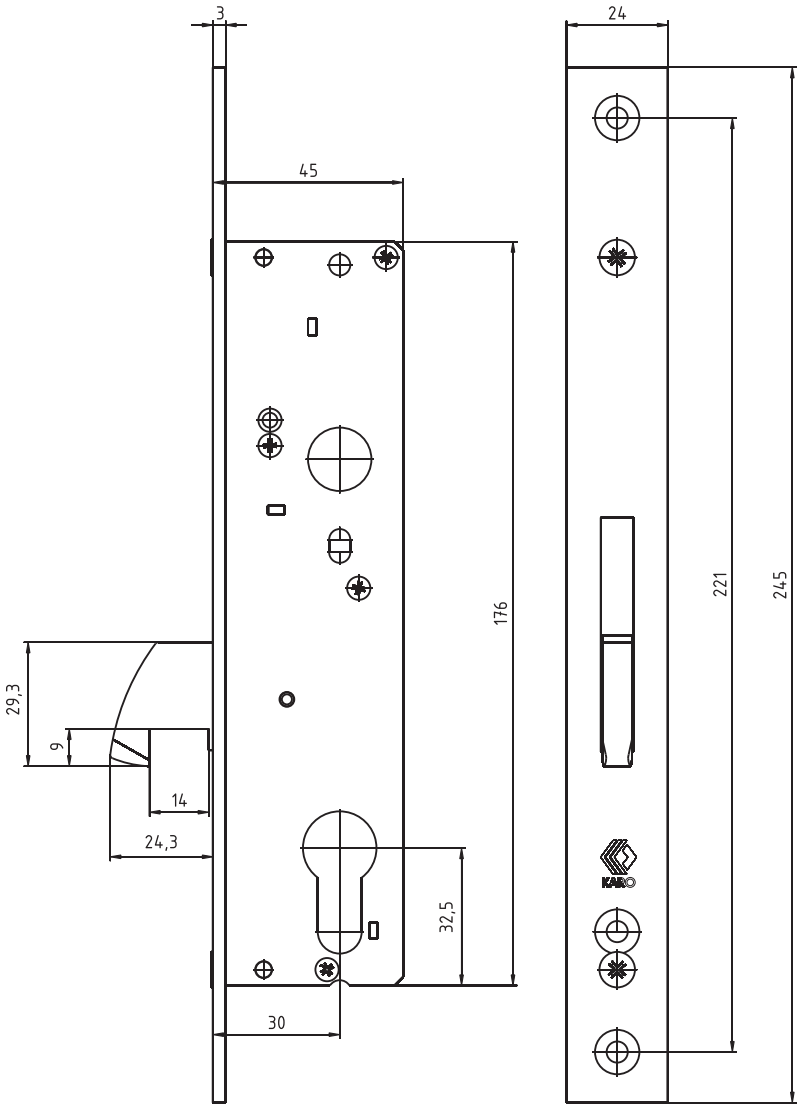

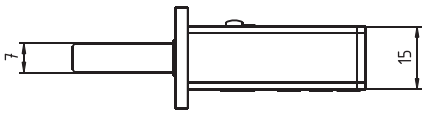

KARO mortice lock
For doors made of aluminium and steel profiles.
Bolt.
Lock clearance 14mm
Faceplate INOX 3 x 24mm
Dornmass: 30mm
Descending bolt

Classified acc. to: PN-EN 12209-2005

3	C	5	0	0	C	2	B	A	0	0

Code	Make	Unit	Descritption
041-032	INOX	each	KARO BOLT MORTICE LOCK **KP-30 h14**

Optional:

040-005	INOX	set	STRIKER PLATE **C6**
040-006	INOX	set	STRIKER PLATE **C8**
040-015	INOX	each	FLAT STRIKER PLATE **24D-180**
040-018	INOX	each	FLAT STRIKER PLATE **22D-180**

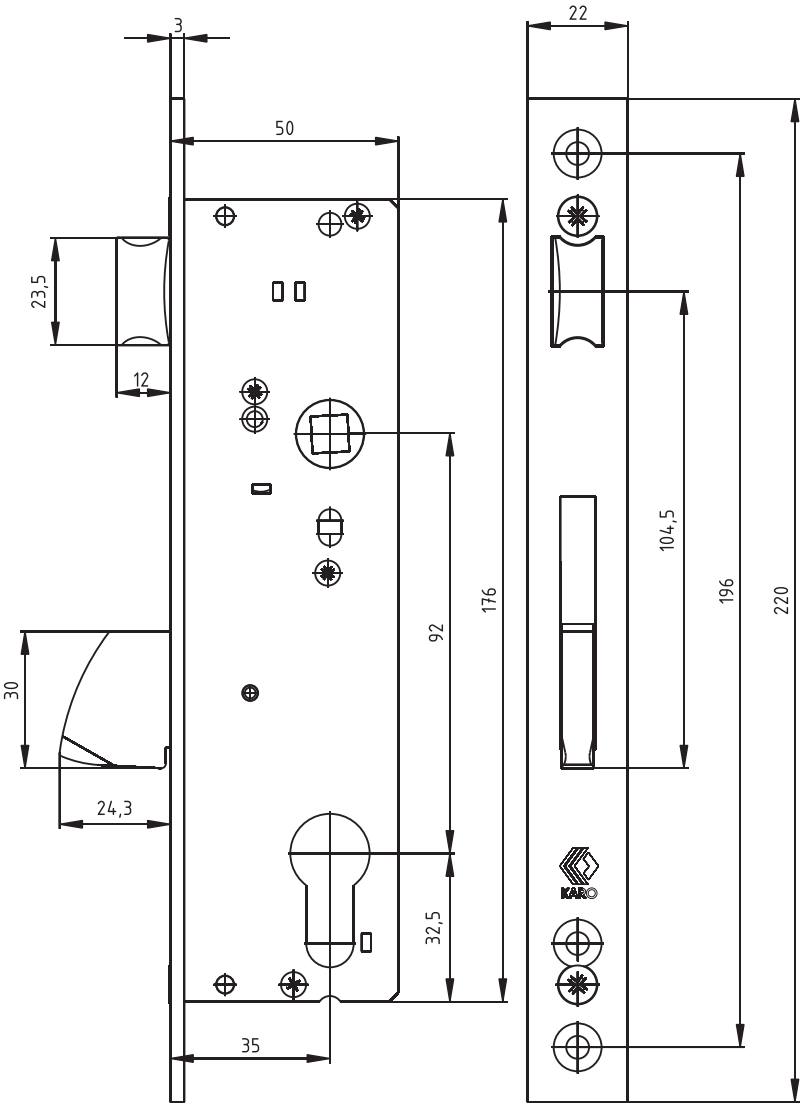

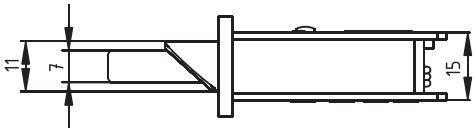

KARO mortice lock
For doors made of aluminium and steel profiles.
Latch-bolt.
Faceplate INOX 3x22mm
Dornmass: 35mm
Descending bolt
Universal right / left.
Change of direction possible when the front is unscrewed
Latch pulled back with the key.

Classified acc. to: PN-EN 12209-2005

3	C	5	0	0	C	2	B	C	2	0

Code	Make	Unit	Description
041-018	INOX	each	KARO LATCH-BOLT MORTICE LOCK **KP22-35** (right)
041-017	INOX	each	KARO LATCH-BOLT MORTICE LOCK **KP22-35** (left)

Optional:

040-019	INOX	each	FLAT STRIKER PLATE **22Zx220** FOR LATCH-BOLT LOCK

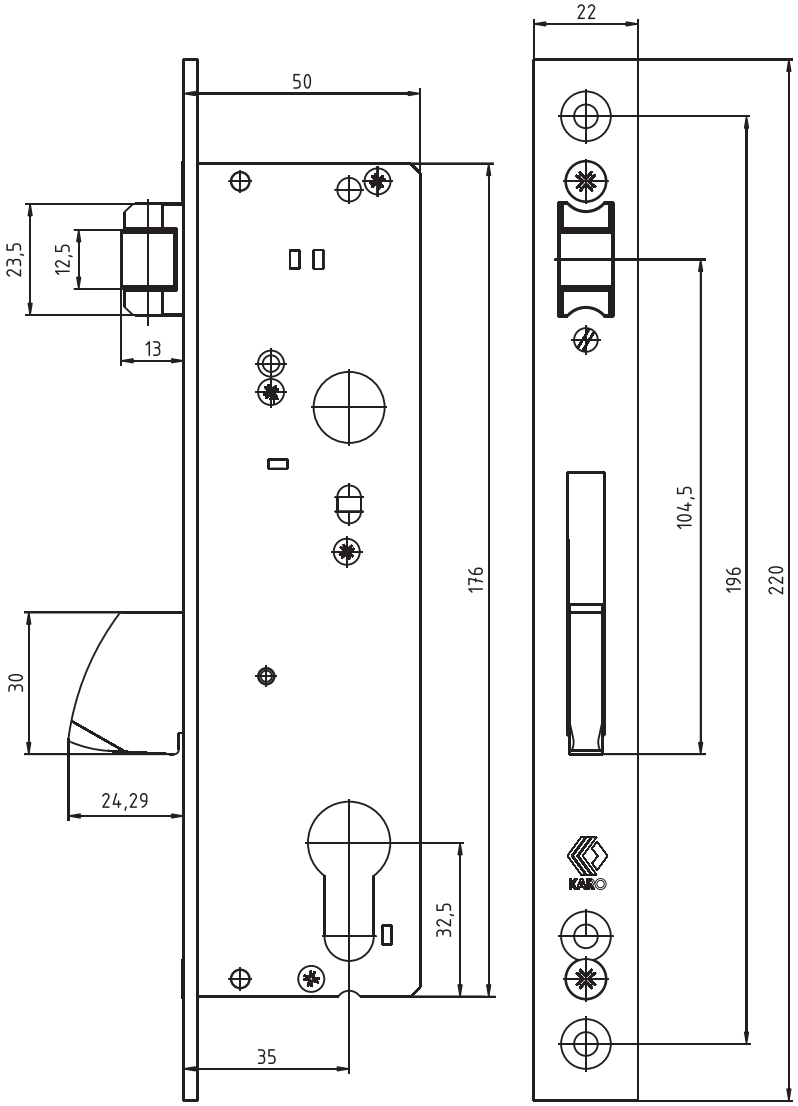

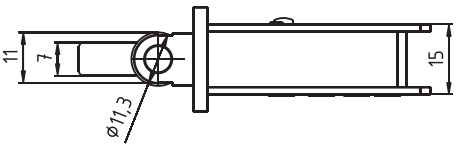

KARO mortice lock
For doors made of aluminium and steel profiles.
Roller-bolt.
Faceplate INOX 3 x 22mm
Dornmass: 35mm
Descending bolt
Universal right / left

Classified acc. to: PN-EN 12209-2005

3	C	5	0	0	C	2	B	A	0	0

Code	Make	Unit	Description
041-019	INOX	each	KARO ROLLER-BOLT MORTICE LOCK **KP22-35**

Optional:

040-020	INOX	each	FLAT STRIKER PLATE **22R-220**

ASSEMBLING INSTRUCTIONS FOR KARO LOCKS

The locks are designed for external and internal doors made of aluminium and PVC-U profiles in general construction.

This refers to the following locks:
Roller-bolt lock KC-35;
Roller-bolt lock KC-30;
Roller-bolt lock KP-35;
Roller-bolt lock KP-30;
Roller-bolt lock KP-22-35

1. Make holes in the door sash in accordance with the shape of the lock and handle hardware to be fitted.

2. Mount the lock in the same order as presented on the drawing.

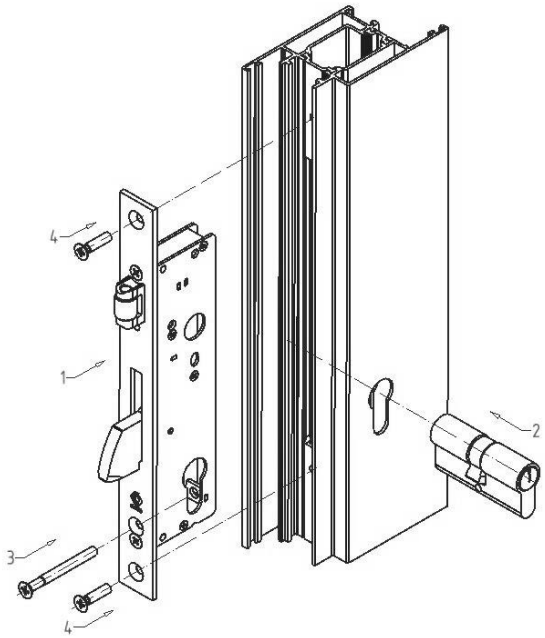

3. Adjust protruding of the roller by turning the screw following the drawing.

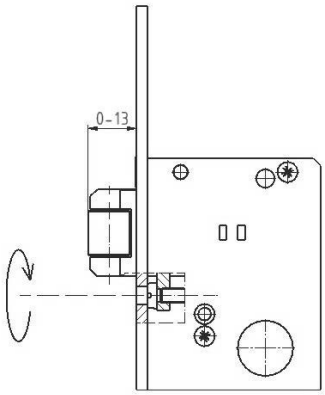

ASSEMBLING INSTRUCTIONS FOR KARO LOCKS

Refers to the following locks:
Latch-bolt lock KC-35;
Latch-bolt lock KC-30;
Latch-bolt lock KP-35;
Latch-bolt lock KP-30;
Latch-bolt lock KP-22-35;
Latch-bolt lock KP-22-30.

1. Make holes in the door sash in accordance with the shape of the lock and handle hardware to be fitted.
2. Fit the lock in the same order as presented on the drawing.

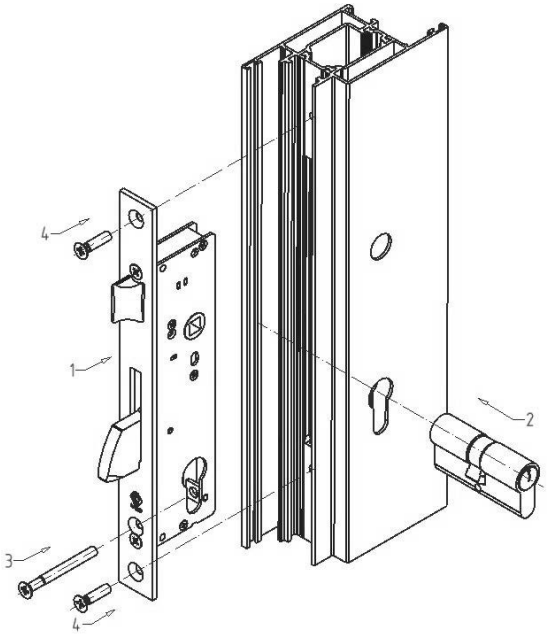

In order to change direction of the lock (right or left)::
1. Unsrew the front of the lock,
2. Turn the latch in accordance with the drawing.
3. Screw in the front of the lock.

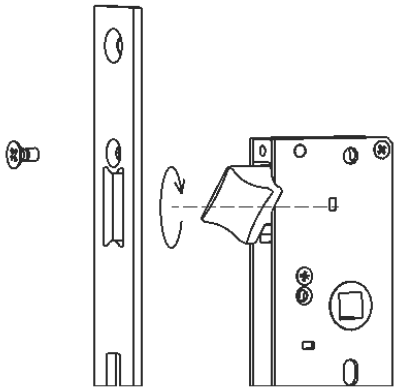

ASSEMBLING INSTRUCTIONS FOR KARO LOCKS.

The locks are designed for external and internal doors made of aluminium and PVC-U profiles in general construction.

This refers to the following locks:
Bolt lock KC-35;
Bolt lock KC-30;
Bolt lock KP-35;
Bolt lock KP-30;
Bolt lock KP-30h6;
Bolt lock KP-30h14;
Bolt lock KP-22-35.

1. Make holes in the door sash in accordance with the shape of the lock and fitted hardware.

2. Fit the lock in the same order as presented on the drawing.

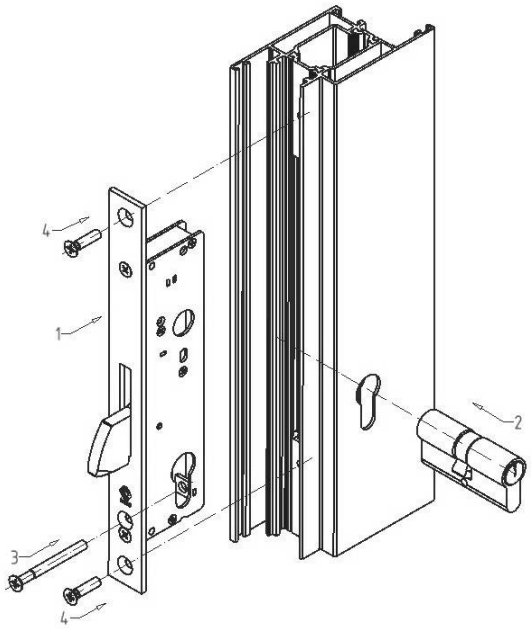

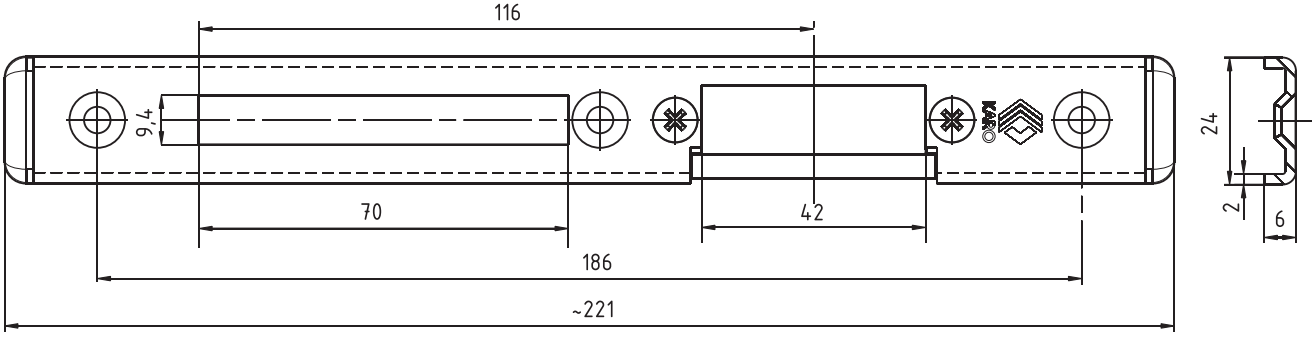

Strike plate for doors made of aluminium and steel profiles
Adjustable striker plate in scope of 3mm
Right or left
INOX plate C 6 x 24mm
With PVC-U finishing elements

Code	Unit	Make	Description
040-002	set	INOX	ADJUSTABLE STRIKER PLATE KARO **E-C6** RIGHT
040-001	set	INOX	ADJUSTABLE STRIKER PLATE KARO **E-C6** LEFT

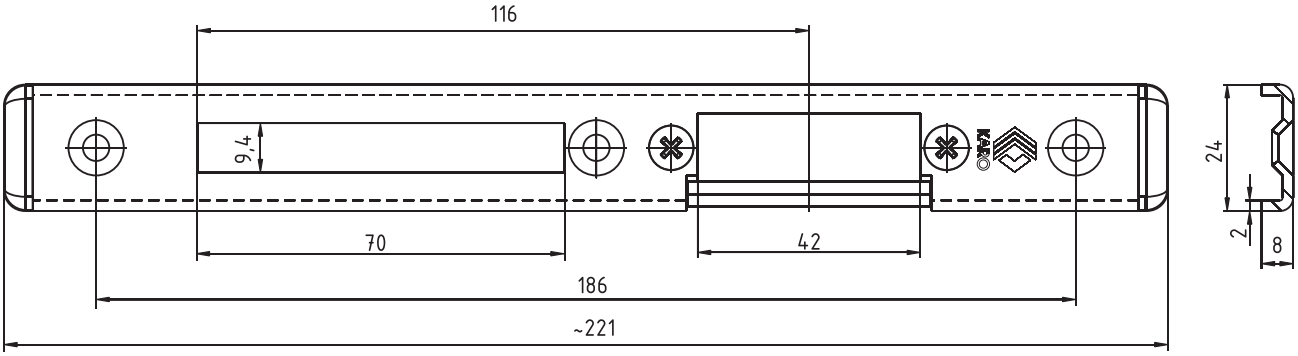

Strike plate for doors made of aluminium and steel profiles
Adjustable striker plate in 3 mm scope
Right or left
INOX plate C 8 x 24mm
With PVC-U finishing elements.

Code	Unit	Make	Description
040-004	set	INOX	ADJUSTABLE STRIKER PLATE KARO **E-C8** RIGHT
040-003	set	INOX	ADJUSTABLE STRIKER PLATE KARO **E-C8** LEFT

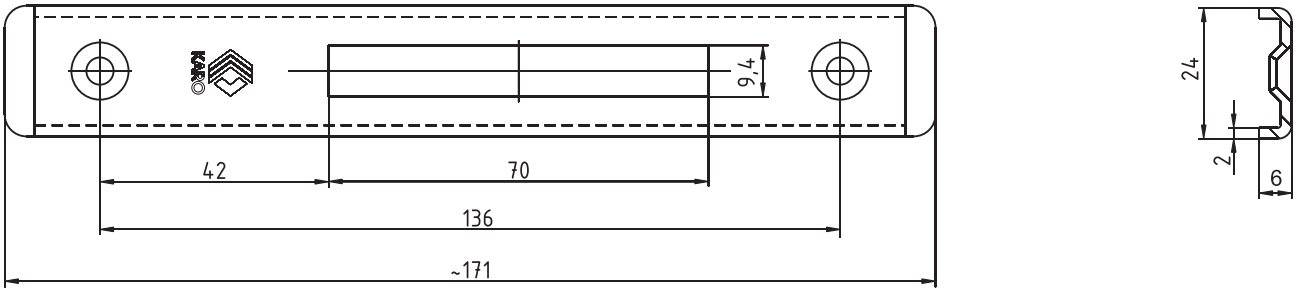

Strike plate for doors made of aluminium and steel profiles
Bolt lock striker plate
INOX plate C 6 x 24mm
With PVC-U finishing elements.

Code	Unit	Make	Description
040-005	set	INOX	ADDITIONAL STRIKER PLATE KARO **C-6**

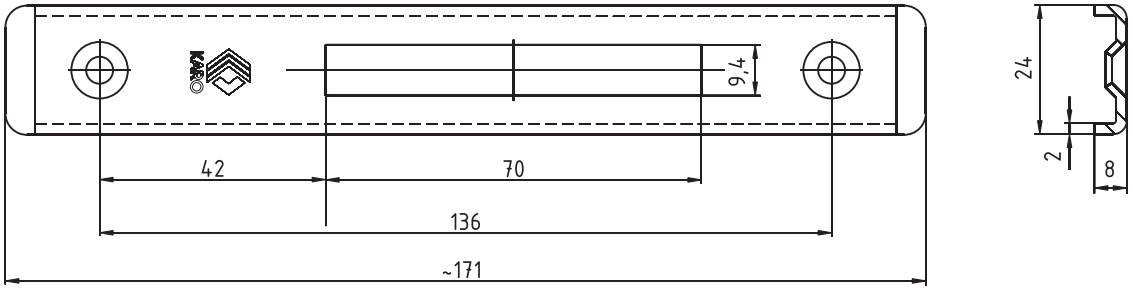

Strike plate for doors made of aluminium and steel profiles.
Bolt lock striker plate
INOX plate C 8 x 24mm
With PVC-U finishing elements.

Code	Unit	make	Description
040-006	set	INOX	ADDITIONAL STRIKER PLATE KARO **C-8**

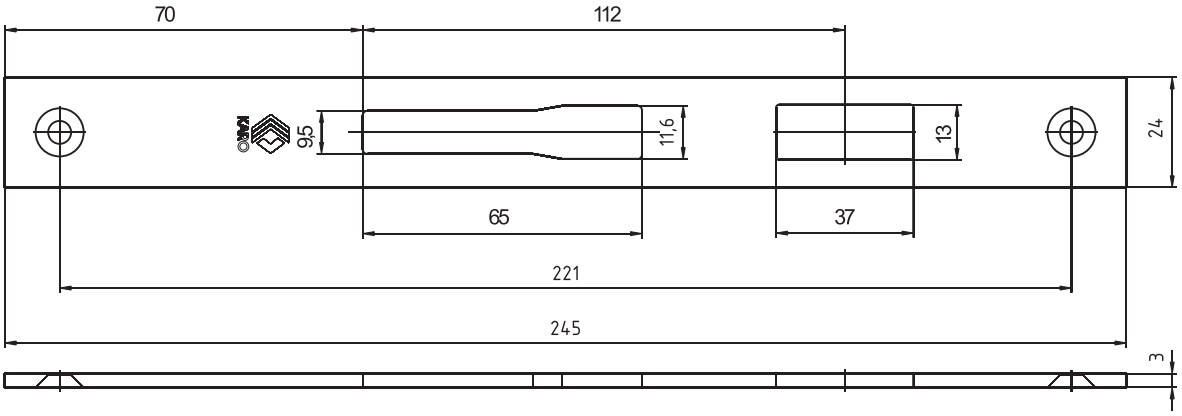

Strike plate for doors made of aluminium and steel profiles.
INOX plate 245 x 24mm
Latch-bolt lock striker plate.

Code	Unit	Make	Description
040-013	set	INOX	FLAT STRIKER PLATE KARO **24Z-245**

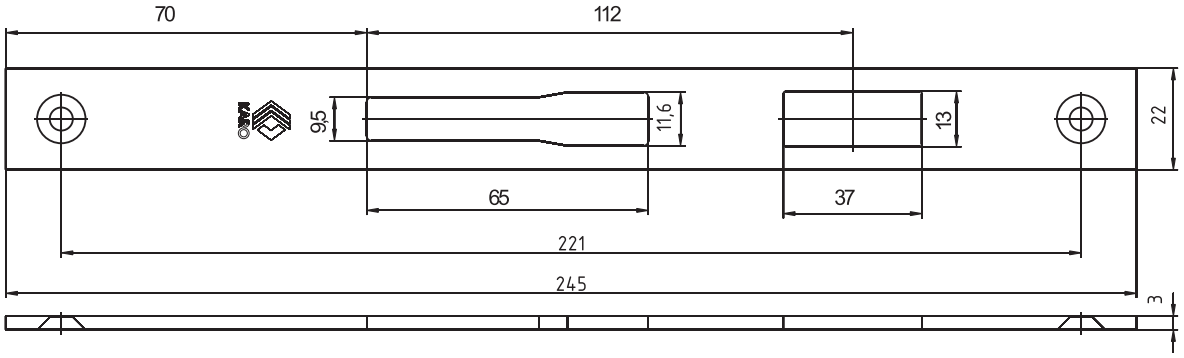

Strike plate for doors made of aluminium and steel profiles.
INOX plate 245 x 22mm
Latch-bolt lock striker plate.

Code	Unit	Make	Description
040-016	set	INOX	FLAT STRIKER PLATE KARO **22Z-245**

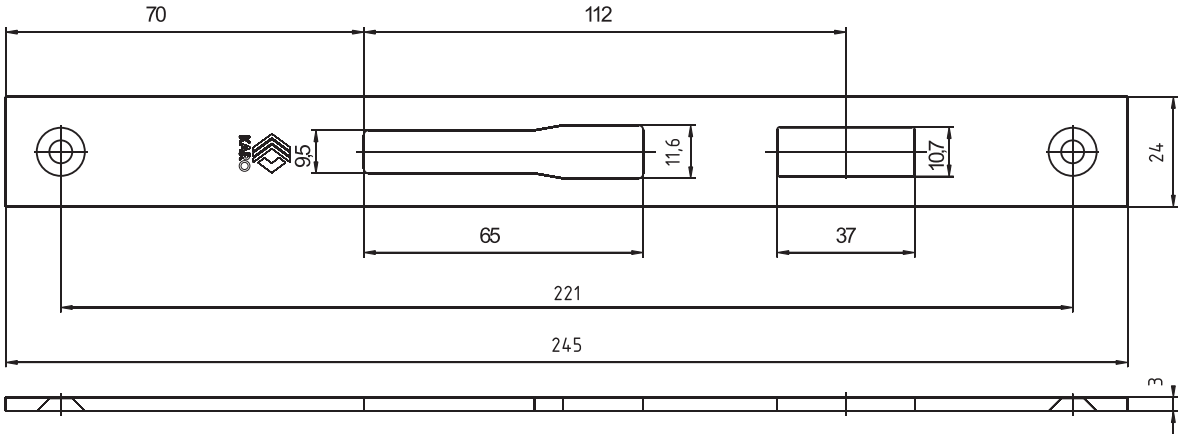

Strike plate for doors made of aluminium and steel profiles.
INOX plate 245 x 24mm
Roller-bolt lock striker plate.

Code	Unit	Make	Description
040-014	set	INOX	FLAT STRIKER PLATE KARO **24R-245**

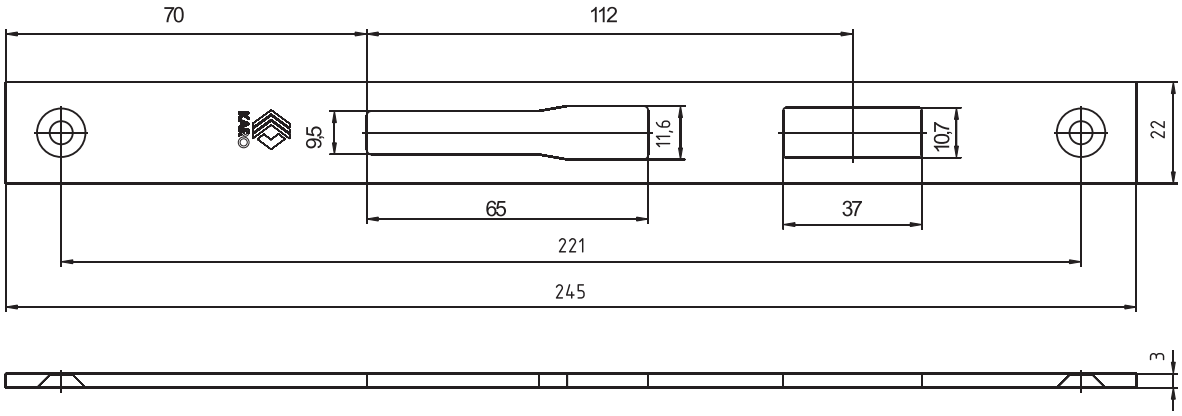

Strike plate for doors made of aluminium and steel profiles.
INOX plate 245 x 22mm
Roller-bolt lock striker plate.

Code	Unit	Make	Description
040-017	set	INOX	FLAT STRIKER PLATE KARO **22R-245**

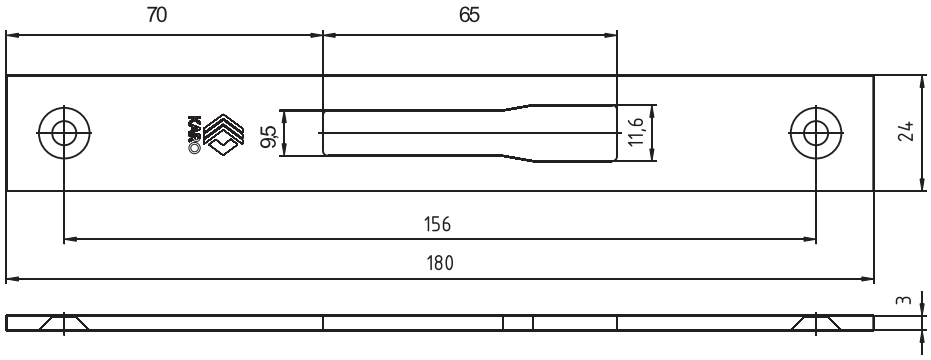

Strike plate for doors made of aluminium and steel profiles.
INOX plate 180 x24mm
Bolt lock striker plate

Code	Unit	Make	Description
040-015	set	INOX	FLAT STRIKER PLATE KARO **24D-180**

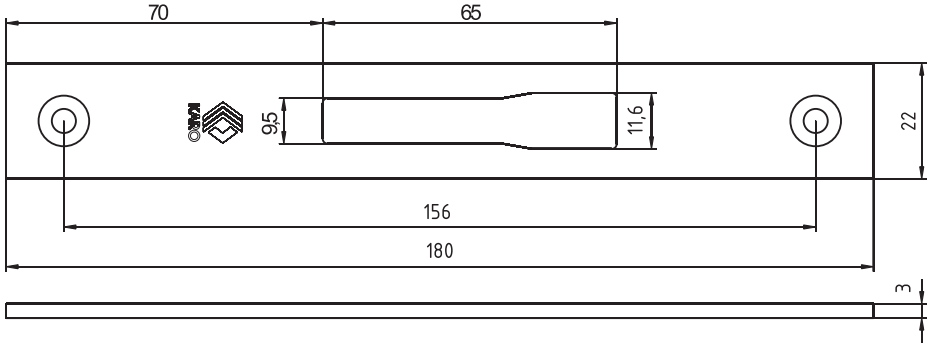

Strike plate for doors made of aluminium and steel profiles
INOX plate 180 x22mm
Bolt lock striker plate.

Code	Unit	Make	Description
040-018	set	INOX	FLAT STRIKER PLATE KARO **22D-180**

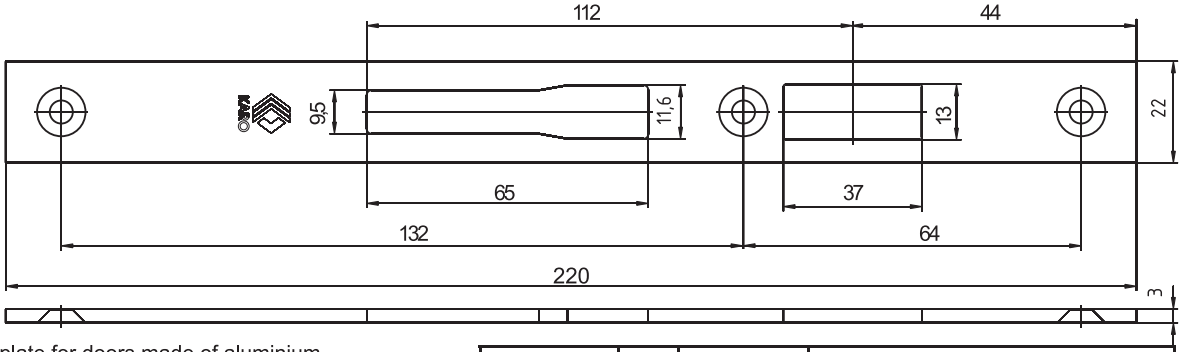

Strike plate for doors made of aluminium and steel profiles.
INOX plate 220 x 22mm
Latch-bolt lock striker plate.

Code	Unit	Make	Description
040-019	set	INOX	FLAT STRIKER PLATE KARO **22Z-220**

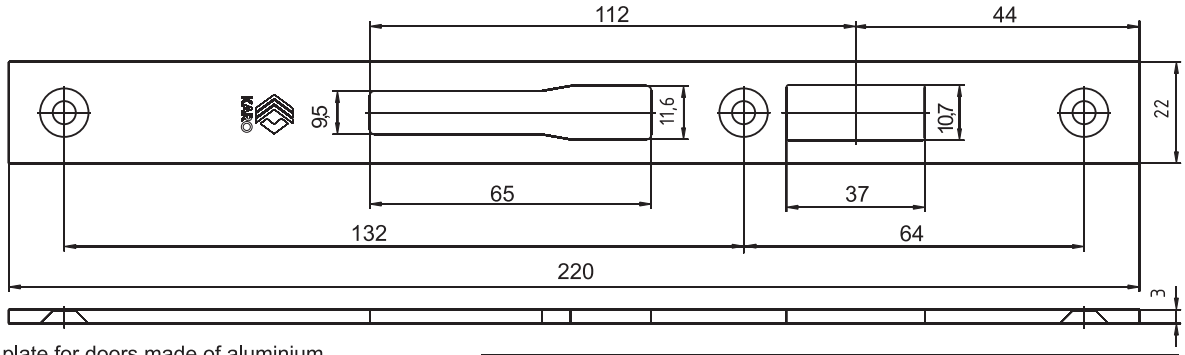

Strike plate for doors made of aluminium and steel profiles.
INOX plate 220 x 22mm
Latch-bolt lock striker plate.

Code	Unit	Make	Description
040-020	set	INOX	FLAT STRIKER PLATE KARO **22R-220**

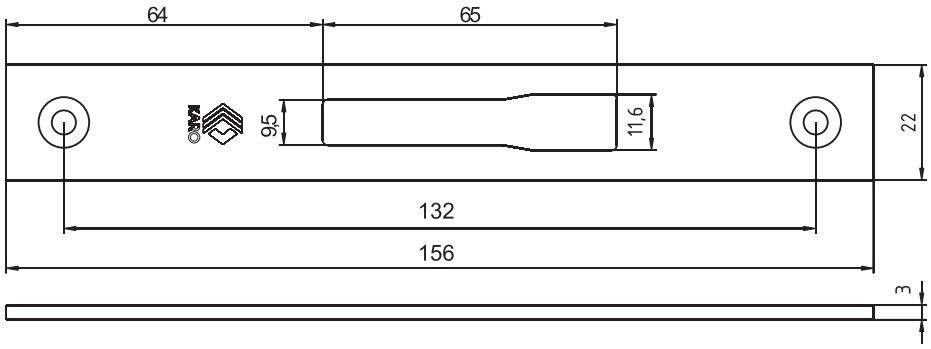

Strike plate for doors made of aluminium and steel profiles.
INOX plate 180 x22mm
Bolt lock striker plate.

Code	Unit	Make	Description
040-021	set	INOX	FLAT STRIKER PLATE KARO **22D-156**

LOCK STRIKER PLATE

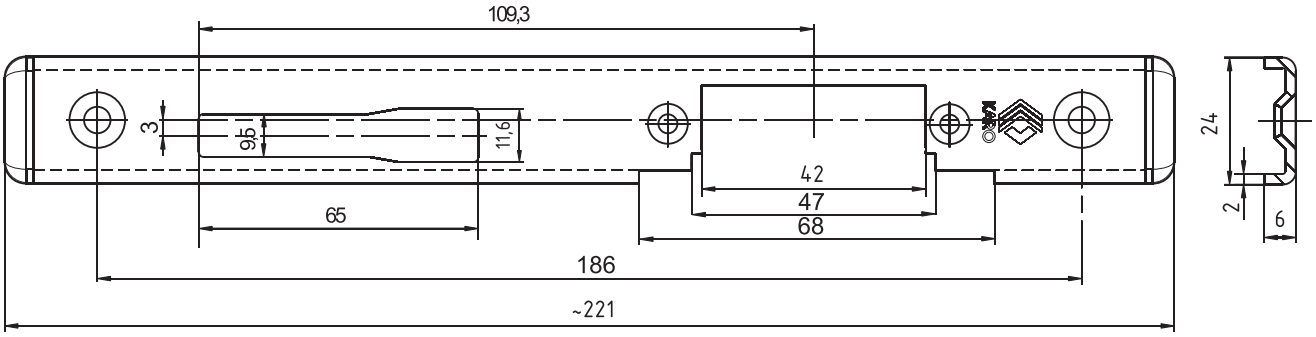

Strike plate for electric strike
for doors made of aluminium and steel profiles
Right or left.
INOX plate C 6 x 24mm
With PVC-U finishing elements.

Code	Unit	Make	Description
040-008	set	INOX	STRIKER PLATE KARO **E1-C6** (right) FOR ELECTRIC STRIKE
040-007	set	INOX	STRIKER PLATE KARO **E1-C6** (left) FOR ELECTRIC STRIKE

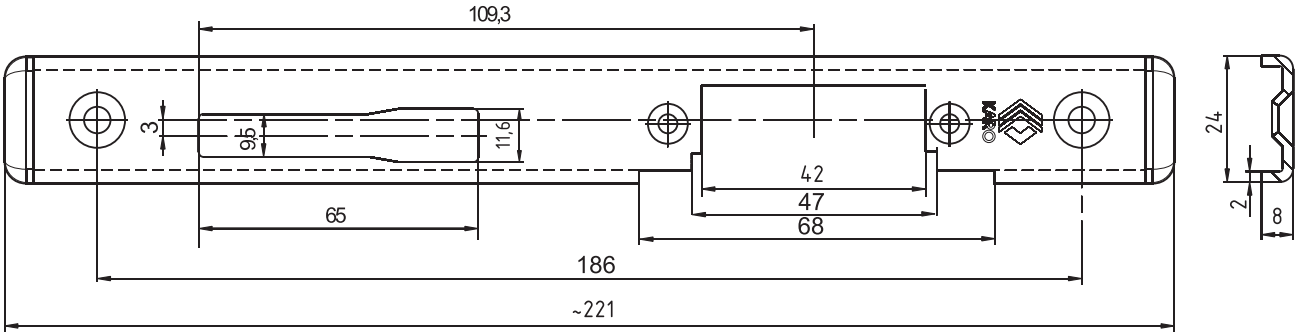

Strike plate for electric strike
for doors made of aluminium and steel profiles
Right or left.
INOX plate C 8 x 24mm
With PVC-U finishing elements.

Code	Unit	Make	Description
040-010	set	INOX	STRIKER PLATE KARO **E1-C8** (right) FOR ELECTRIC STRIKE
040-009	set	INOX	STRIKER PLATE KARO **E1-C8** (left) FOR ELECTRIC STRIKE

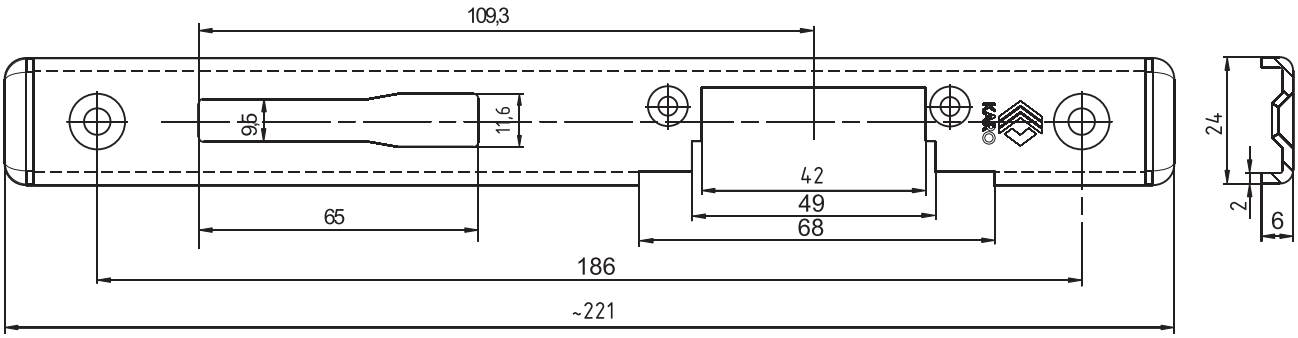

Strike plate for electric strike
for doors made of aluminium and steel profiles
Right or left.
INOX plate C 6 x 24mm
With PVC-U finishing elements.

Code	Unit	Make	Description
040-012	set	INOX	STRIKER PLATE KARO **E2-C6** (right) FOR ELECTRIC STRIKE
040-011	set	INOX	STRIKER PLATE KARO **E2-C6** (left) FOR ELECTRIC STRIKE

Door blockade 16/80

Catalogue No **039-001**

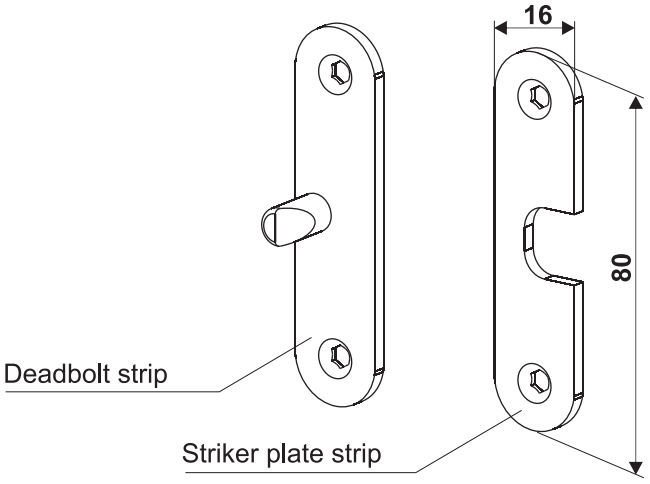

PACKING

Subassembly		length [mm]	width [mm]	height [mm]	pcs/ box	box weight [kg]
Sp. 16 s.	box	300	180	180		
	pallet	1200	800			
D. 16 s.	box	300	180	180		
	pallet	1200	800			

USE:
for wooden doors, as an anti-unhingement element.
Strip thickness 3 mm.

Door blockade 20/80

Catalogue No **039-002**

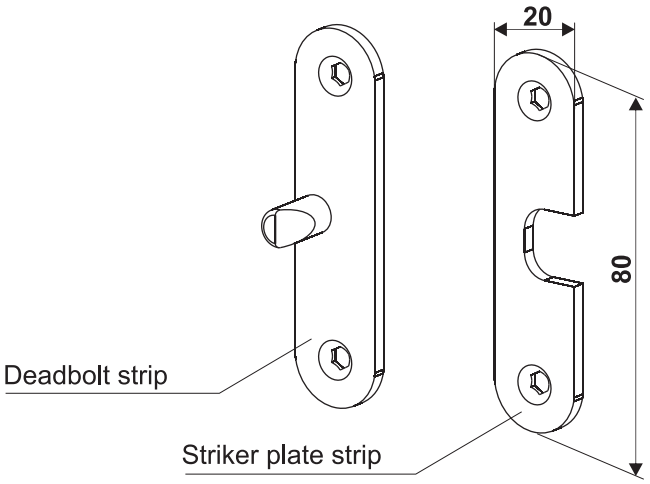

PACKING

Subassembly		length [mm]	width [mm]	height [mm]	pcs/ box	box weight [kg]
Sp. 20 s.	box	300	180	180		
	pallet	1200	800			
D 20 s	box	300	180	180		
	pallet	1200	800			

USE:
for wooden doors, as an anti-unhingement element.
Strip thickness 3 mm.

Slat door blockade 20/2300

Catalogue No **039-003**

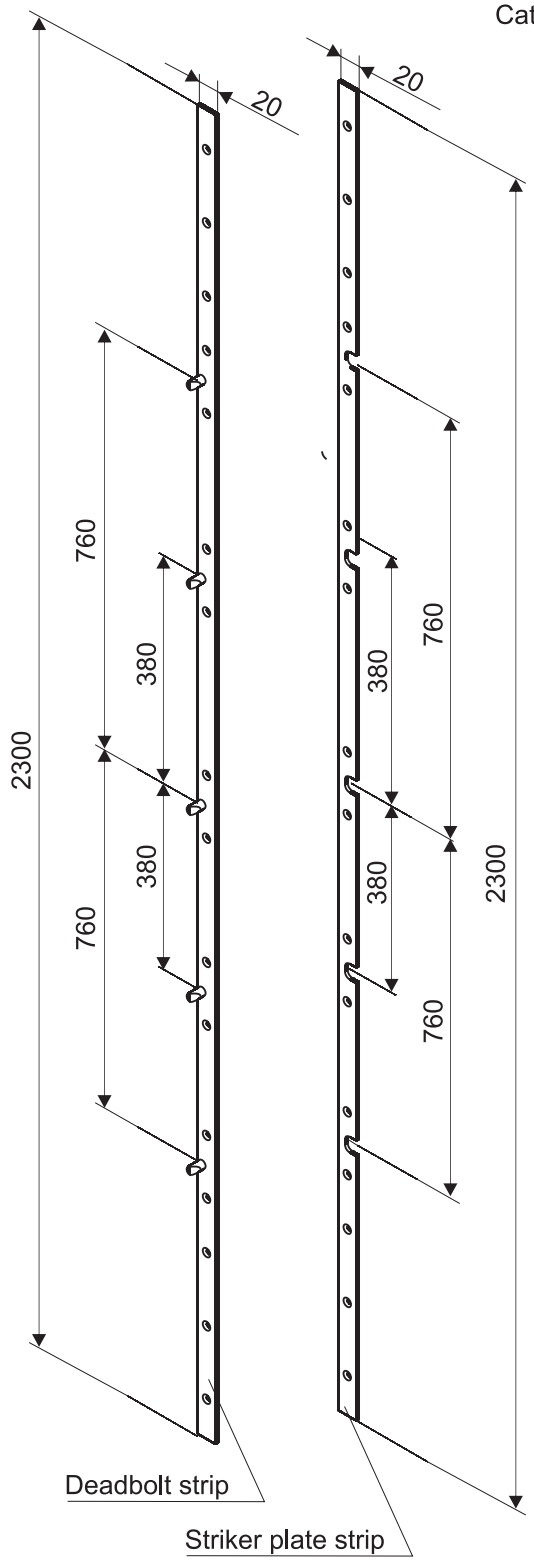

USE:
for wooden doors, as an anti-unhingement element.
Strip thickness 3 mm.

PACKING

Subassembly		length [mm]	width [mm]	height [mm]	pcs/ box	box weight [kg]
Sp 20 bl.	box	2400	85	50	10	
	pallet	2400	800			
D 20 bl.	box	300	180	50	10	
	pallet	2400	800			

1. PRELIMINARIES:

1.1. Check the precision of windows manufacturing (sash and frame) according to the following:
a) difference between diagonals: max 4 mm **- obligatory condition!**
b) notch clearance: minimum 12 mm

1.2. Select type and size of the hardware, check fitting position (stop studs) and position of the deadbolts toward the orientation marks.

1.3. Establish length of drive gear and stay and then cut to length according to the following formula:

Drive gear **Z** length = H_w minus 160 mm
Stay **R** length = S_w minus 160 mm
Drive gear **M** length = H_w minus 2 x 160 mm

1.4. Make a channel in place of fitting the hardware according to the drawing (it is recommended to make a channel around the entire circumference).

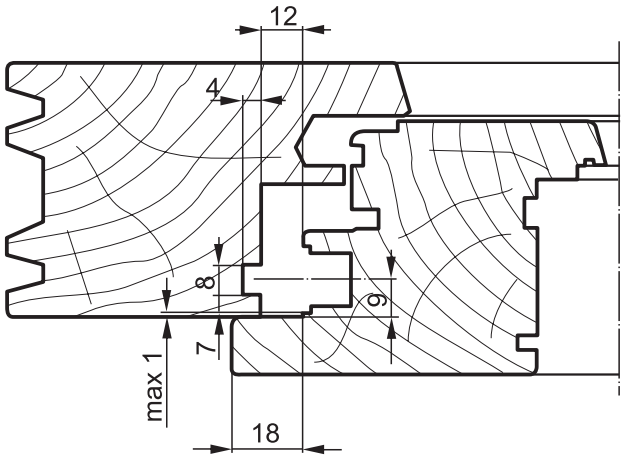

EURONUT 7x8 window profile type

1.5. Mill the socket (recess) for drive gear transmission with dimensions 65x12,3 mm in accordance with the drawing below.

1.6. Drill holes for the handle in accordance with he below drawing.
a) holes diameter D according to the type of used handle.

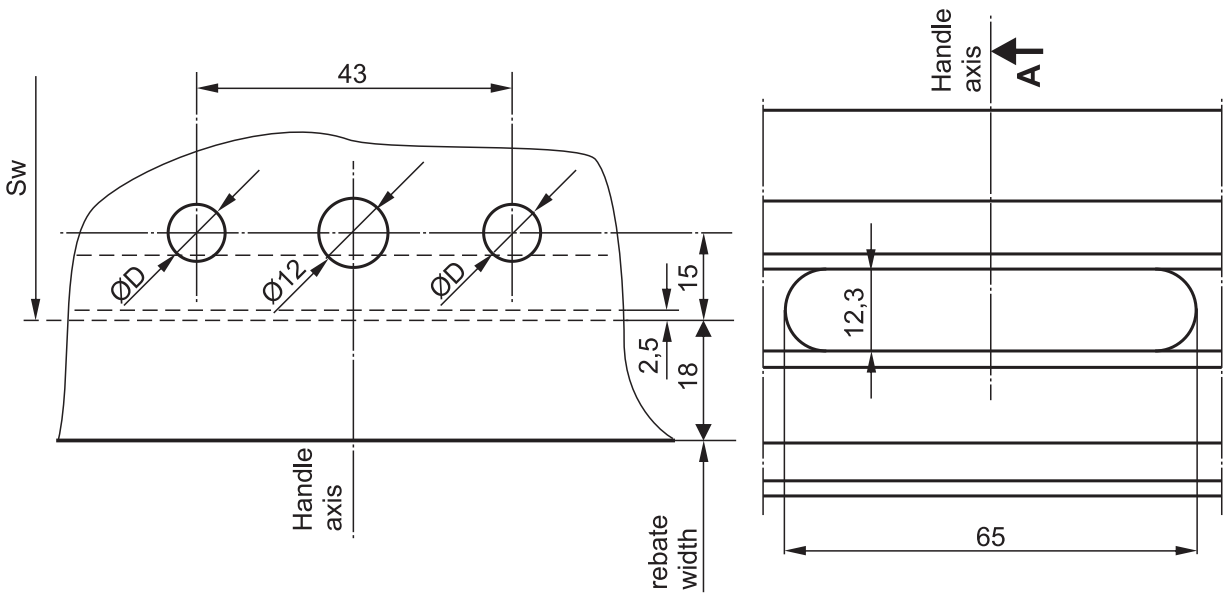

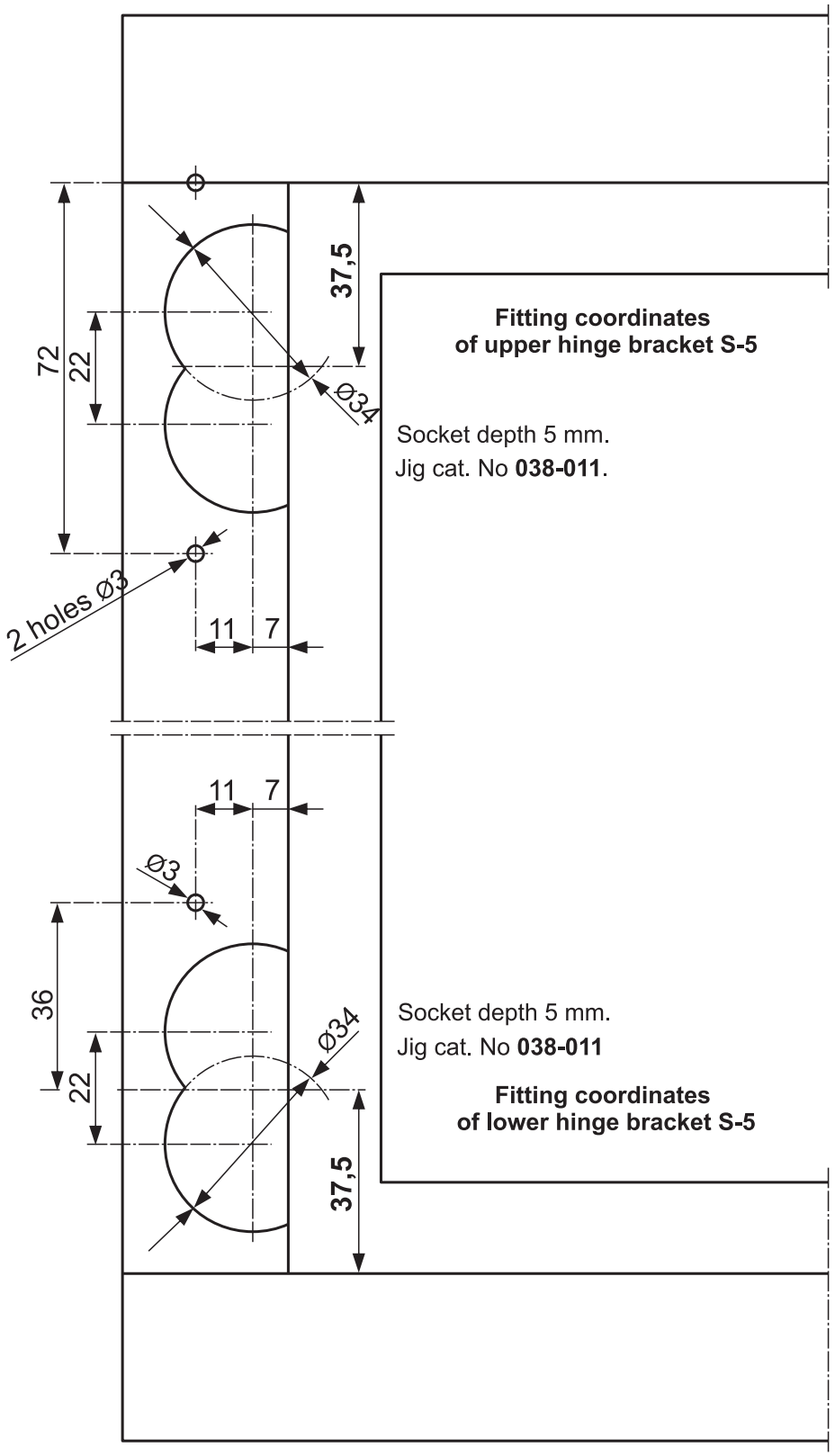

Fitting coordinates of upper hinge bracket S-5

Socket depth 5 mm.
Jig cat. No **038-011**.

Socket depth 5 mm.
Jig cat. No **038-011**

Fitting coordinates of lower hinge bracket S-5

1.8. Sockets for hinge boxes (heavy version) should be made with a special end milling cutter Ø34 mm using a vertical milling machine and jig catalogue No **038-008**.

Clearance 11 mm	
rebate	18 mm
X	11 mm
Y1	7 mm
Y2	10 mm

Socket for hinge bracket Dr/C

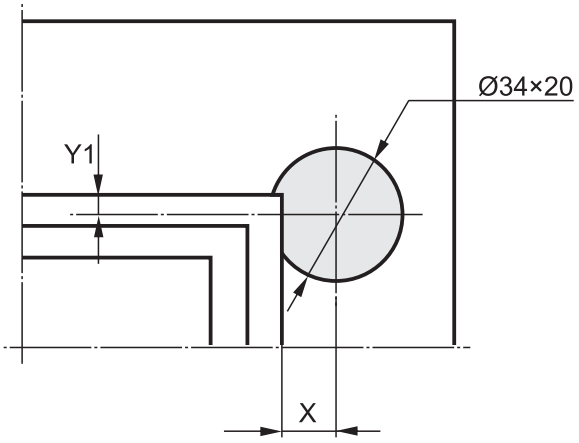

For middle hinge Dr/C

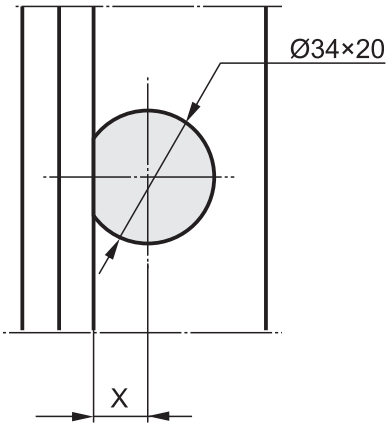

Socket for hinge bracket Dr/C

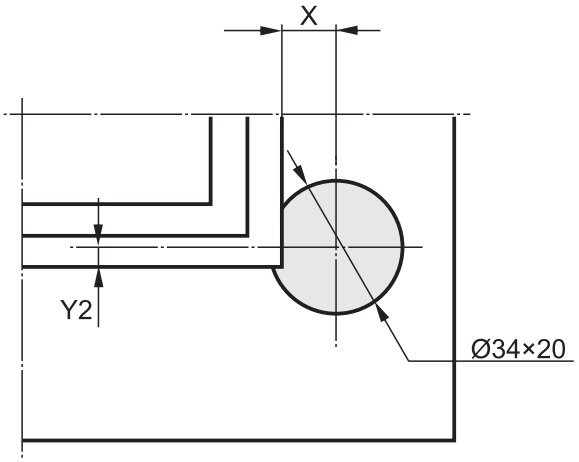

For tilt windows hinge Dr/C

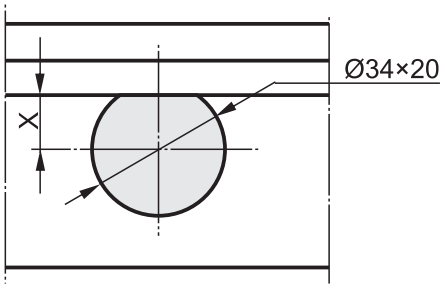

2. FITTING - WOODEN WINDOWS - GENERAL RULES

FITTING ORDER OF SASH SUBASSEMBLIES
TURN AND TURN / TILT VERSION

2.1. **CORNER** (depending on the type)
- place the corner in the sash hardware groove paying close attention to the proper adjoining of arms. Deadbolt for the corner (A and R) should be located of the side of fitting of the drive gear. Fasten with 2 screws 4 x 30 in the holes closest to the corner bend.

2.2. **CORNER DRIVE GEAR**
- Place the drive gear in the sash hardware groove together with the stay. Fasten with screws 4x30. Locking deadbolt should be located in the axis of the bean hole of the drive gear front. Check if the stay slider is properly connected.

2.3. **STAY**
- cut to length the stay and place it with corner drive gear in the hardware groove of the sash meshing the corner drive gear slider with the stay slider and then with the corner. Fasten with screws 4 x 30. Additionally fasten the corner with the stay through the corner connecting plate.

Note:
1) It is recommended to use tilting restrictor for windows with Sw > 1200 mm:
- restrictor's arm L - **011-001**
- restrictor's arm P - **011-002**
- restrictor's striker plate - **011-003**

2.4. **DRIVE GEAR „M"** or **„Z"**
- cut to length the drive gear and place it in the sash groove paying close attention to proper meshing of drive gear slider and corner slider (corner deadbolt in the axis of bean hole). Fasten the drive gear with screws 4 x 30. Additionally fasten corner with drive gear through corner connecting plate.

Note:
1) clearance between corner and drive gear fronts may be max. 4 mm. Meshing of the slide and the cogged block must be min. 3/4 of teeth length.

2.5. **LOWER HINGE - LEAF**
- place the lower hinge leaf **DrC** left or right, in the bottom corner of the sash. In case of hardware channel use stop blocks. Fasten with screws 4 x 3h0.

2.6. **HANDLE**
- Fasten the handle with 2 screws M5 x 35.

Note:
choose the handle depending on the needs, 4- or 8-position with the following mandrel length:
L = 32 mm for rebate „15"
L = 35 mm for rebate „18"

FITTING ORDER OF SASH SUBASSEMBLIES.

2.7. **STRIKER PLATES**

a) peripheral striker plate - place in frame channel or in sockets, fasten with screws 4 x 30.

b) place lower striker plate in bottom corner of the frame depending on the window type (left, right). Fasten with screws 4 x 30.

c) in case of using **jigs for positioning striker plates**, first fix peripheral striker plates to the frame.

2.8. **LOWER HINGE - BRACKET**

place bracket deadbolt in Ø 34 mm holes made in frame. Fasten with screws 4 x 40 (heavy version).

2.7. **UPPER HINGE**

fasten upper hinge bracket with screws 4 x 40 so that the mandrel could be inserted from the bottom side of the stay arm.

NOTE:

1) when using the hardware version with symmetrical drive gear, ends should be assembled before fitting the drive gear.
2) in sashes of turn windows with corner drive gears with Sw > 1000 mm corner drive gears should be fitted first together with ends.
3) lower, middle and upper hinge brackets Dr-C should be placed in sockets 34 x 20 and fastened with screws 4 x 40. Other co-operating elements located in the sash channel should be fastened with screws 4 x 30.
4) when fixing corner and middle hinges use the same coordinates as for upper hinge bracket
5) in turn windows the central (middle) pressure plate should be fastened with screws 4 x 30. Fitting coordinates according to the jig.

3. MOUNTING AND REMOVING THE SASH

3.1. Place the sash into the frame so that the bracket mandrel of the lower hinge is in the hinge body leaf.

3.2. **Place PVC-U guard onto the bearing**. Connect stay arm with the stay and then with upper hinge bracket.

3.3. Break the studs fixing the assembling position of the hardware with a smooth motion of the handle into CLOSED position. Adjust if necessary (after glazing).

NOTE:

1) **Check hardware functioning**.
2) **Check if the upper hinge mandrel is placed properly.**
3) **Sash should be dismantled in a reverse order.**

4. **ADJUSTMENT AND MAINTENANCE OF THE HARDWARE (**see chapter 13A of the catalogue)

5. **LIST OF JIGS** (see chapter 14 of the catalogue)

1. PRELIMINARIES

1.1. Check the precision of window manufacturing (sash and frame):
a) difference between diagonals: max 4 mm - **obligatory condition!**
b) notch clearance minimum 12 mm

1.2. Select type and size of the hardware, check assembling position (stopping studs) and position of deadbolts toward orientation marks.

1.3. Establish length of drive gear and stay, cut to length according to the following formula:

Drive gear **Z** length = H_w minus 160 mm
Stay **R** length = S_w minus 160 mm
Drive gear **M** length = H_w minus 2 x 160 mm

1.4. Mill the socket (recess) for drive gear transmission with dimensions 65x12,3 mm, in accordance with the drawing below:

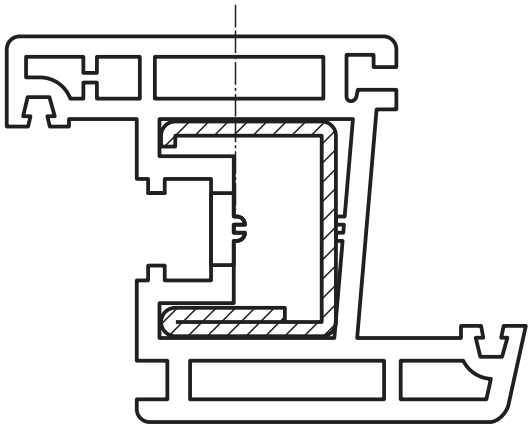

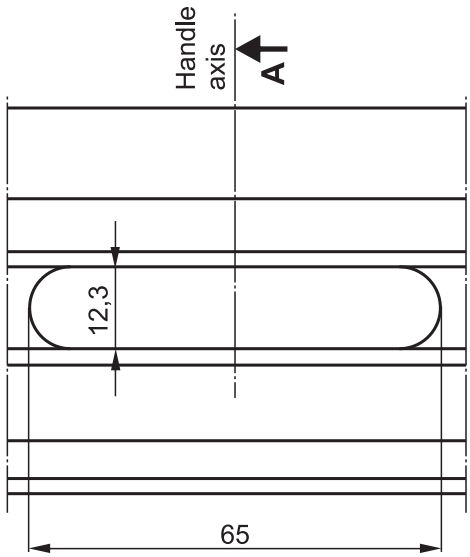

1.5 Drill holes for the handle according to the drawing below.
a) holes diameter ØD depending on the type of the handle.

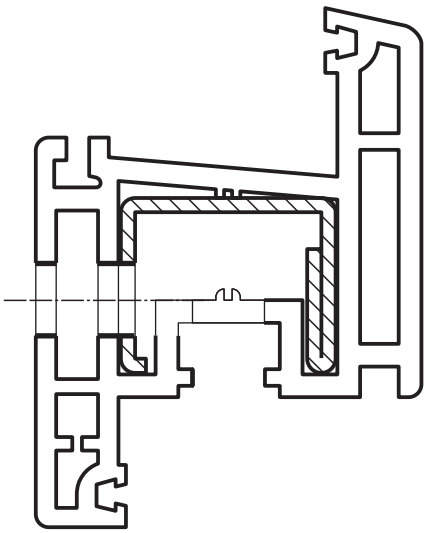

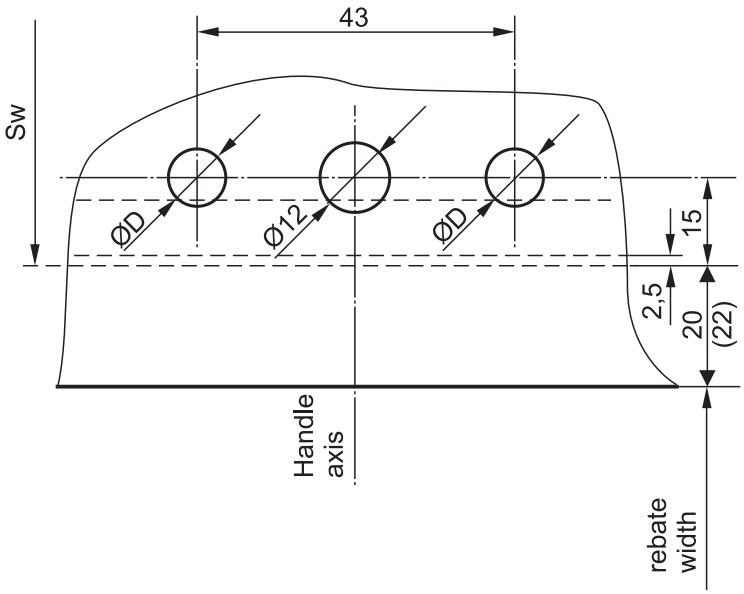

1.6. Drill 2 holes for screws in the lower part of the rebate according to the drawing.

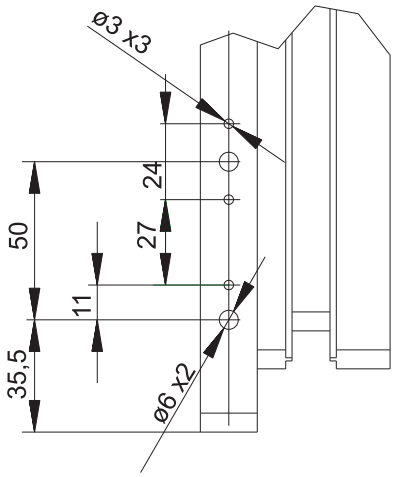

Dimensions for lower hinge leaf TwO-6 - cat. No **016-024**
working with lower notch hinge bracket - cat. No **016-012**
Jig for the sash Lhl/TwO 6 - cat. No **038-001**
or **038-002** (5°) or **038-007** (7°)
(rejigged - see ROMB catalogue)

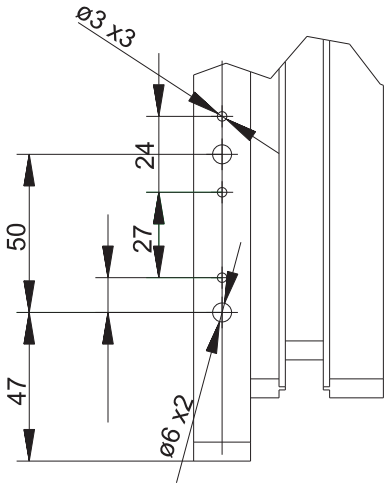

Dimensions for lower hinge leaf TwO-6 - cat. No **016-024**
working with lower hinge bracket TwO-3 - cat. No **016-025**
TwO-6 - cat. No **016-026**
Jig for the sash Lhl/TwO 6 - cat. No **038-001**
or **038-002** (5°) or **038-007** (7°)
(see ROMB catalogue)

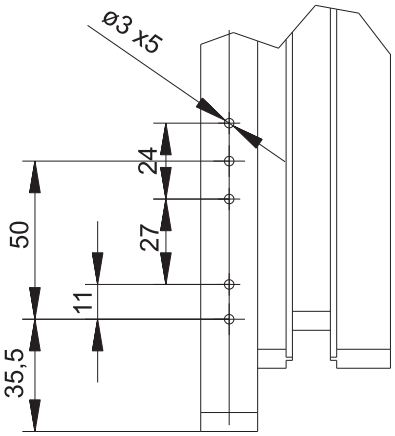

Dimensions for lower hinge leaf TwO-3 - cat. No **016-023**
working with lower notch hinge bracket - cat. No **016-012**
Jig for the sash Lhl/TwO 3 - cat. No **038-005** or **038-006 (7°)**
(rejigged - see ROMB catalogue)

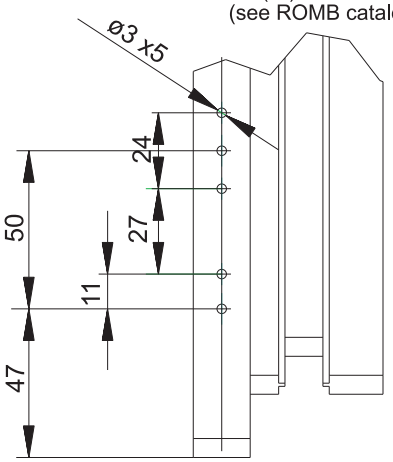

Dimensions for lower hinge leaf TwO-3 - cat. No **016-023**
working with lower hinge bracket TwO-3 - cat. No **016-025**
TwO-6 - cat. No **016-026**
Jig for the sash Lhl/TwO3 - cat. No **038-005** or **038-006 (7°)**
(see ROMB catalogue)

1.7.Drill holes for screws in the upper part of the frame according to the drawing.

Dimensions for upper hinge bracket
TWO 3 - cat. No **015-004**
Jig for the frame Uhb/Lhb ø3 - cat. No **038-009**

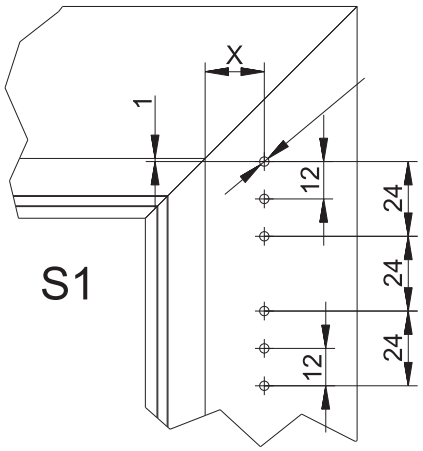

Dimensions for upper hinge bracket
TWO 6 - cat. No **015-004**
Jig for the frame Uhb/Lhb ø6 - cat. No **038-009**

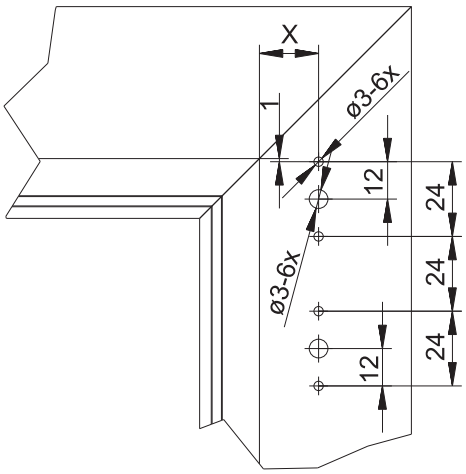

1.8.Drill holes for screws in the lower part of the frame according to the drawing.

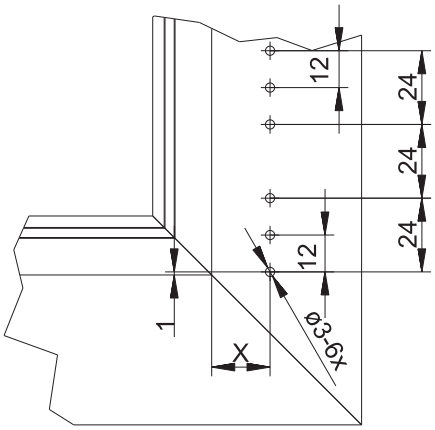

Dimensions for lower hinge bracket:
TWO 3 - cat. No **016-025**
Notch - cat. No **016-012**
Jig for the frame Uhb/Lhb ø3 - cat. No **038-009**

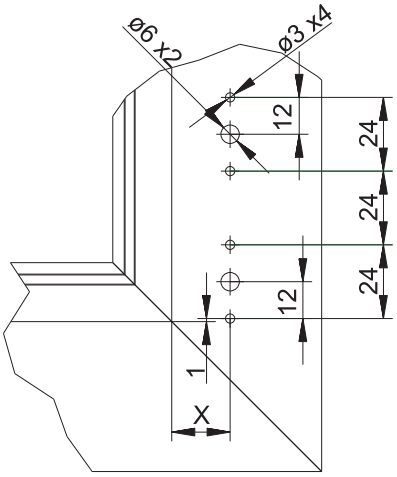

Dimensions for lower hinge bracket:
TWO-6 - cat. No **016-026**
Jig for the frame Uhb/Lhb ø6 - cat. No **038-012**

2. PVC-U WINDOWS FITTING - GENERAL RULES

ORDER OF FITTING OF SASH SUBASSEMBLIES

TURN AND TURN / TILT VERSION

2.1. **CORNER** (depending on the type)
- place the corner in the hardware groove of the sash, playing close attention to proper adjoining of arms. Deadbolt for the corner (A and R) should be located from the side of assembling of the drive gear. Fasten with 2 screws 3,9 x 25 in the holes closest to the corner bend.

2.2. **CORNER DRIVE GEAR**
- place in hardware groove of the sash together with the stay, fasten with screws 3,9 x 25. Locking deadbolt should be located in the axis of the bean hole of the drive gear front. Check the connection with stay slider.

2.3. **STAY**
- cut the stay to length and then place it together with corner drive gear in the hardware groove of the sash meshing corner drive gear slider with stay slider, and then with the corner. Fasten with screws 3,9 x 25. Additionally fasten the corner with the stay through corner connecting plate.

NOTE:

for windows with **Sw > 1200 mm** it is recommended to use tilt restrictor:
- restrictor's arm L - **011-001**
- restrictor's arm P - **011-002**
- restrictor's striker plate - **011-003**

2.4. **DRIVE GEAR „M”** or **„Z”**

- cut the drive gear to length and then place it in sash groove paying attention to the proper meshing of drive gear slider and corner slider (corner deadbolt in the axis of the bean hole). Fasten with screws 3,9 x 25.
  Additionally fasten the corner together with the drive gear through the corner connecting plate.

NOTE:

1) clearance between corner and drive gear fronts may be max 4 mm, meshing of the slider and the cogged block should be min. 3/4 of the teeth length.

2.5. **LOWER HINGE - LEAF**

- place leaf body deadbolts in 6 mm holes made in the rebate.
  Fasten with screws 3,9 x 38.

2.6. **HANDLE**

- fasten the handle with 2 M5 x 35 screws.

NOTE: choose the handle depending on the needs, 4- or 8-position handle with the mandrel length:
L = 32 mm for profiles system „9”
L = 35 mm for profiles system „13”

ORDER OF FITTING SASH SUBASSEMBLIES TO THE FRAME

2.7. **STRIKER PLATES**

a) peripheral striker plate - place in the frame channel, fasten with screws 3,9 x 25.
b) lower striker plate - place in the bottom corner of the frame depending on the type of the window (left, right) fasten with 3,9 x 25 screws.
c) in case of using jigs for striker plates positioning, peripheral striker plates should be first fixed to the frame.

2.8. **LOWER HINGE - BRACKET**

- place bracket deadbolts in Ø6 mm holes made in the frame.
  Fasten with 3,9 x 25 screws.

2.9. **UPPER HINGE**

- fasten upper hinge bracket with 3,9 x 25 screws so that the mandrel was inserted from the bottom side of the stay arm.

NOTE:

1) when using hardware version with symmetrical drive gear, ends should be fitted before placing the drive gear.

2) in turn windows with Sw>800 mm corner drive gears should be fitted first with the ends.

3) in turn windows central (middle) pressure pad to be fastened with 3,9 x 25 screws. Fitting coordinates according to the jig.

3. MOUNTING AND REMOVING OF THE SASH

3.1. Place the sash into the frame so that the lower hinge bracket mandrel is in hinge leaf body.

3.2. **Put a PVC-U guard on the bearing**. Connect stay arm with the stay and then with the upper hinge bracket.

3.3. Brake the studs fixing the fitting position of the hardware with a smooth motion of the handle into CLOSED position. Adjust if necessary (after glazing).

NOTE:
1) **Check hardware functioning.**
2) **Check if the upper hinge mandrel is placed correctly**.
3) **Sash should be dismantled in a reverse order.**

4. ADJUSTMENT AND MAINTENANCE OF THE HARDWARE - see chapter 14 of the catalogue.

5. LIST OF JIGS - see chapter 14 of the catalogue.

Drive gear MC

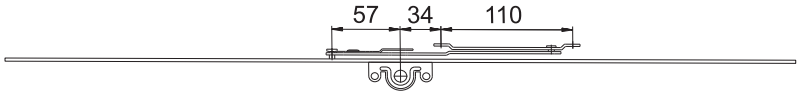

fitting method for **MC1**

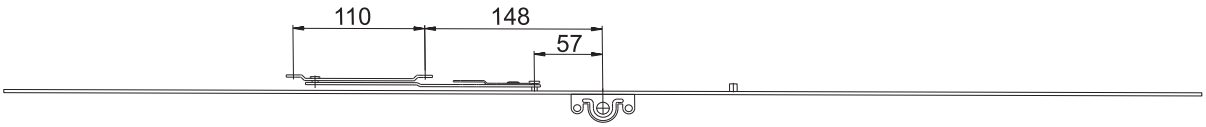

fitting method for **MC2**

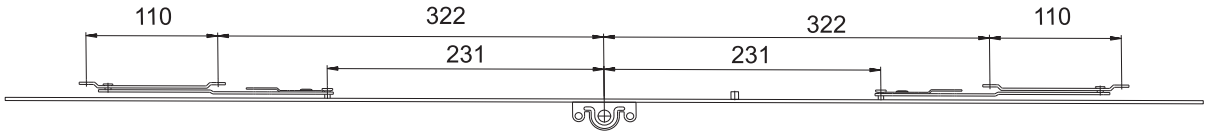

fitting method for **MC3**

Drive gear UC

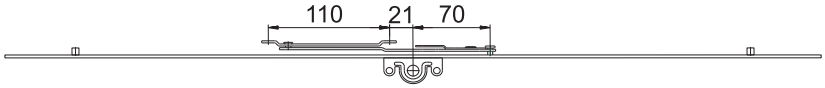

fitting method for **UC1**and **UC2**

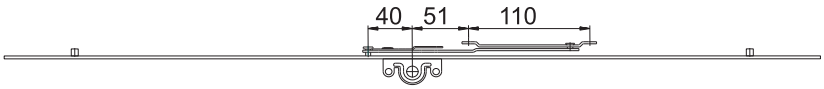

fitting method for **UC3A**

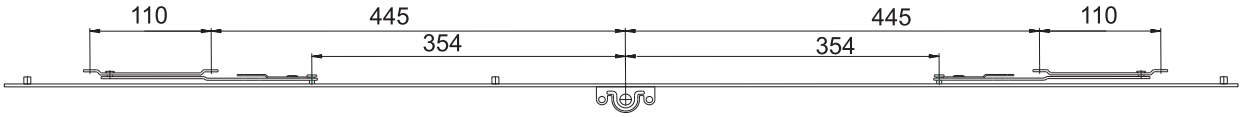

fitting method for **UC4**

NOTE:
recommended types of scissors stay:
wooden windows type **P**
PVC-U windows type **S**
aluminium windows type **S/Al**

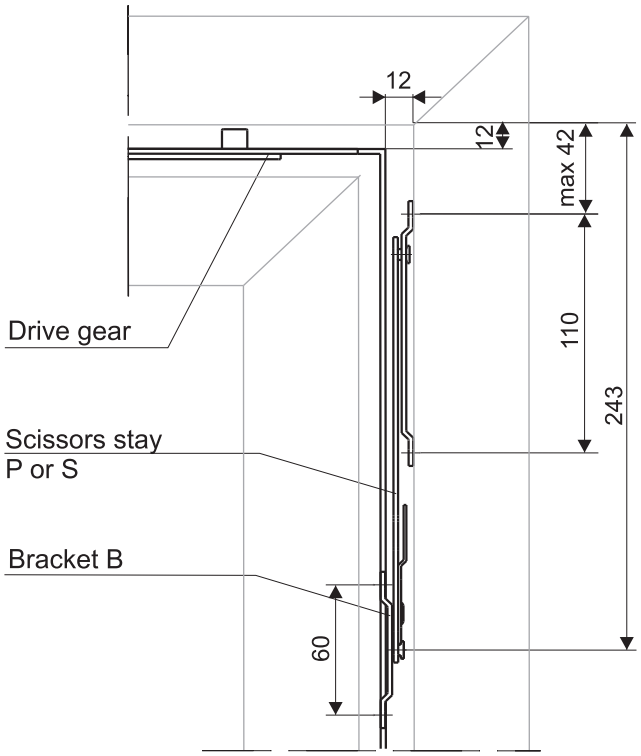

Method of fitting the scissors stay on the side of the sash in windows Tw. Hw⩽1000
(bracket located in hardware notch).

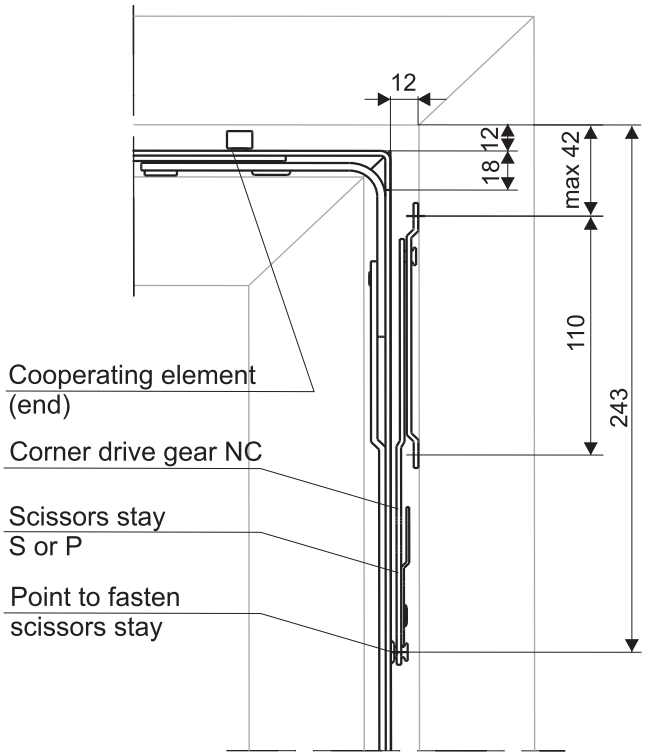

Method of fitting the scissors stay on the side of the sash in windows Tw. Hw ⩾ 1000
(point to fasten of the stay on the corner drive gear pin NC).

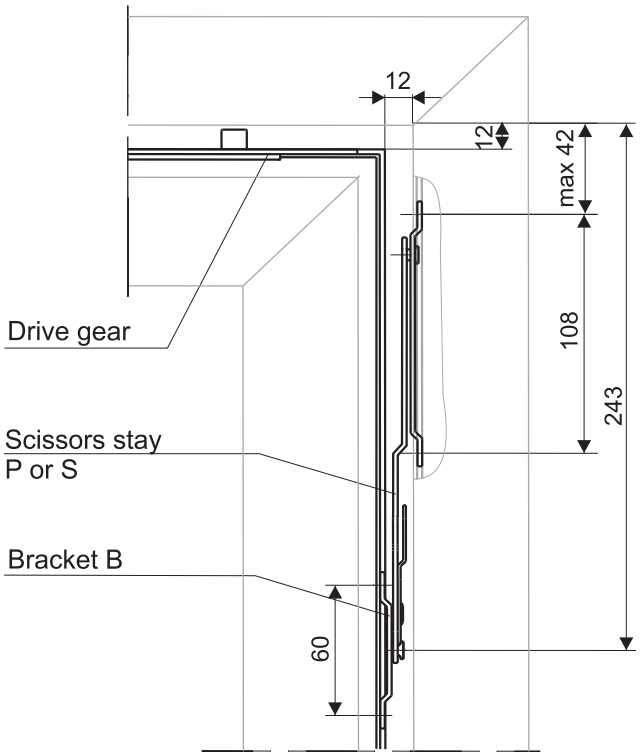

Method of fitting the scissors stay on the side of the sash in Al windows with hardware channel like in PCV profiles. Hw⩽1000
(bracket located in the hardware notch).

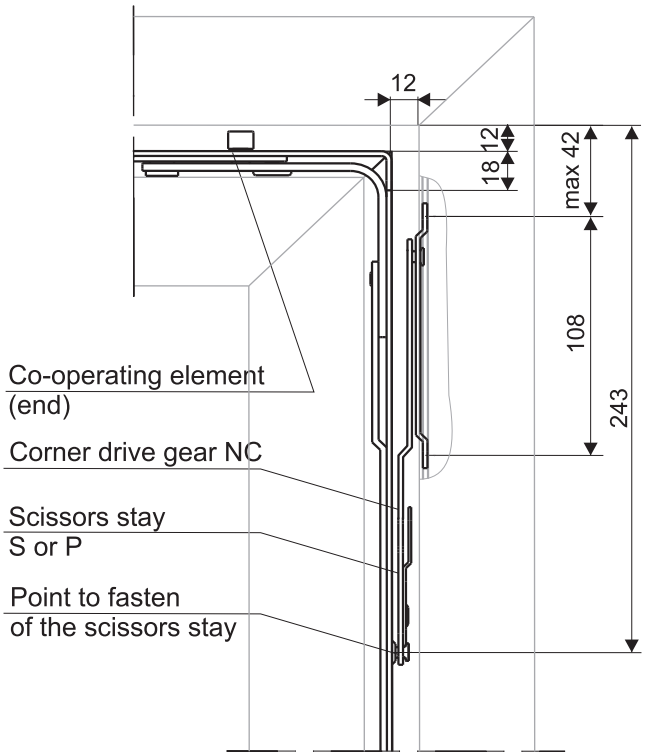

Method of fitting the scissors stay on the side of the sash in Al windows with hardware channel like in PCV profiles Hw ⩾ 1000
(point to fasten the stay on the corner drive gear pin NC).

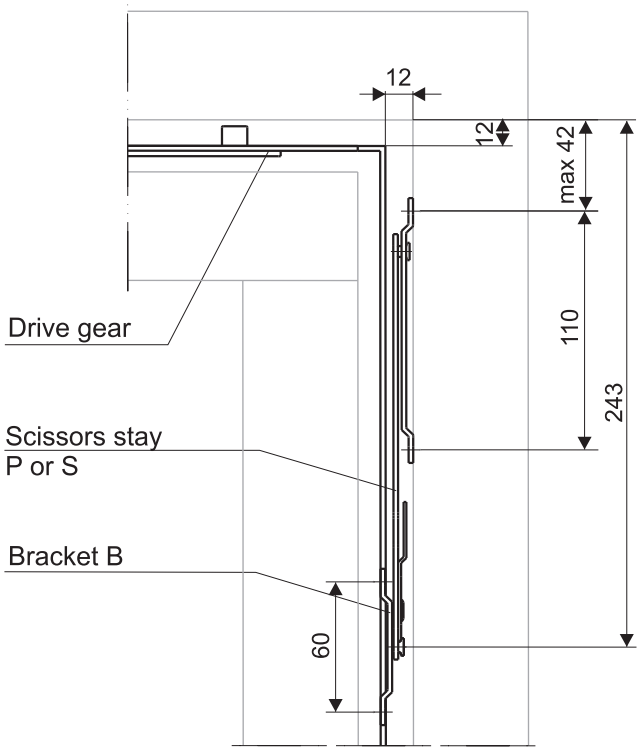

Method of fitting scissors stay on the side of the sash in Dr windows Hw⩽1000
(bracket located in hardware notch).

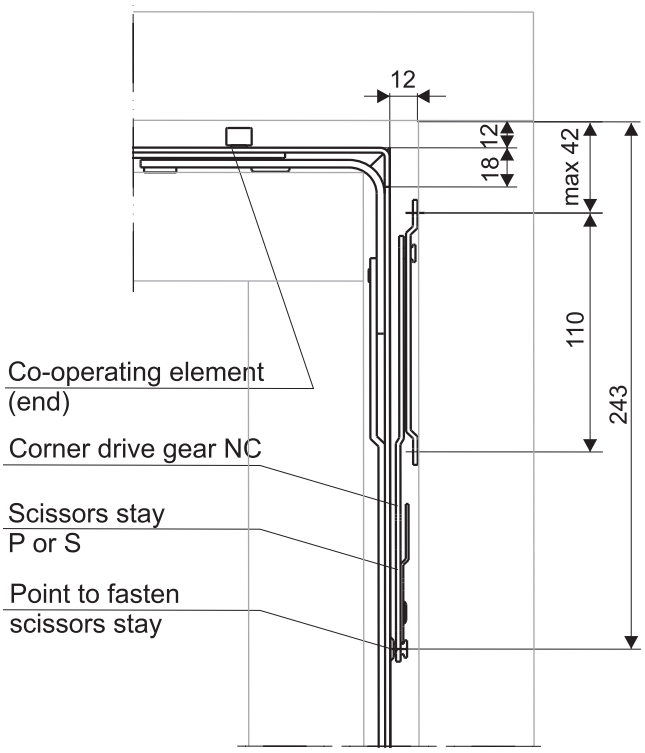

Method of fitting scissors stay on the side of the sash
in Dr windows Hw ⩾ 1000
(point to fasten stay on corner drive gear pin NC).

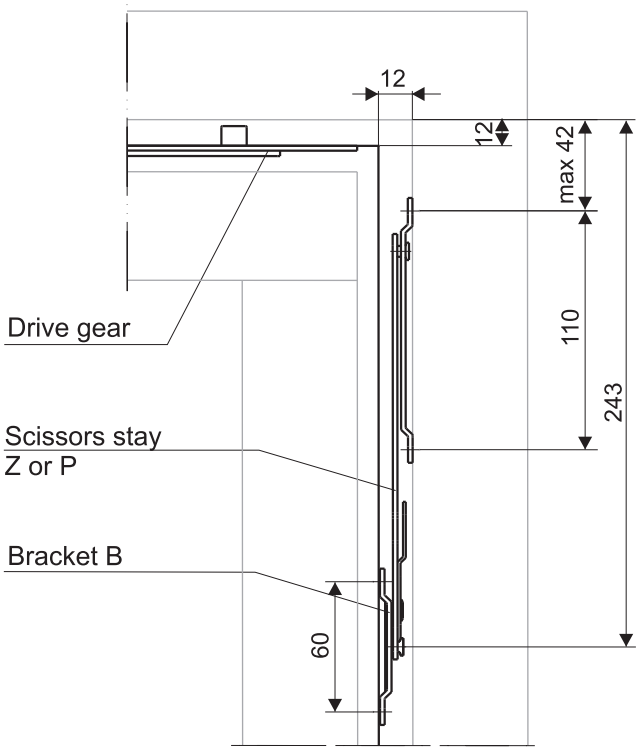

Method of fitting scissors stay on the side of the sash
in Dr windows Hw⩽1000
(bracket located on the sash).

ROMB HARDWARE
ADJUSTMENT AND MAINTENANCE

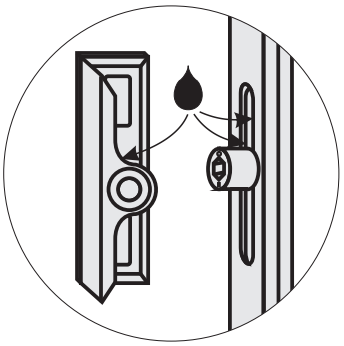

- lubrication point
- pressure adjustment
- position adjustment

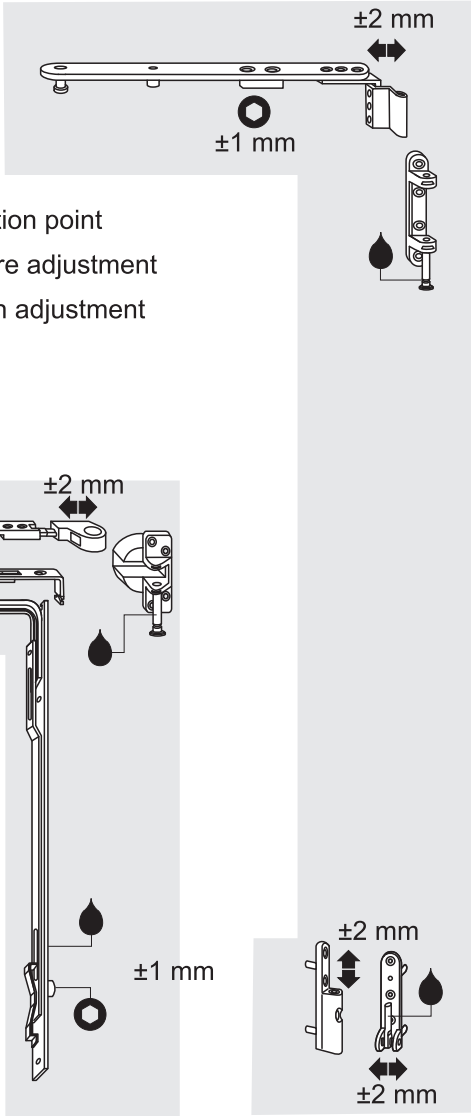

ROMB **hardware maintenance**
Co-operating movable hardware parts should be lubricated at least once a year with a special lubricant for ROMB hardware.

ROMB **hardware adjustment**
Hardware adjustment is performed with a 6-angle 4 mm socket screw key and with a 10 mm open ended spanner.

NOTE:
Maintenance recommendations concern all types of hardware, also other than presented on the scheme.

JIGS FOR FITTING OF PERIPHERAL HARDWARE IN WINDOWS Tw, DR WITH DRIVE GEAR Z

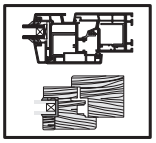

corner..... T-shaped or slider jig (RU) cat. No: **038-019 -** peripheral striker plate and striker plate R/R13

drive gear Z..... slider jig (RU + R).. blue;
cat. No: **038-015 -** drive gear Z3 - Z6,
cat. No: **038-020 -** drive gear Z7 - Z9

corner drive gear ... slider jig (RU+R).... green;
cat. No: **038-016 -** rear part of the sash RU, top of the sash R
drive gear NU0 - NR3

corner drive gear ... slider jig (RU+R).....yellow;
cat. No: **038-017 -** for sashes with Sw > 800 mm
(bottom of the sash RU+R - drive gear NU0 - NR3

stay..... slider jig (RU)..... red;
cat. No: **038-018 -** stay 2C - 4A

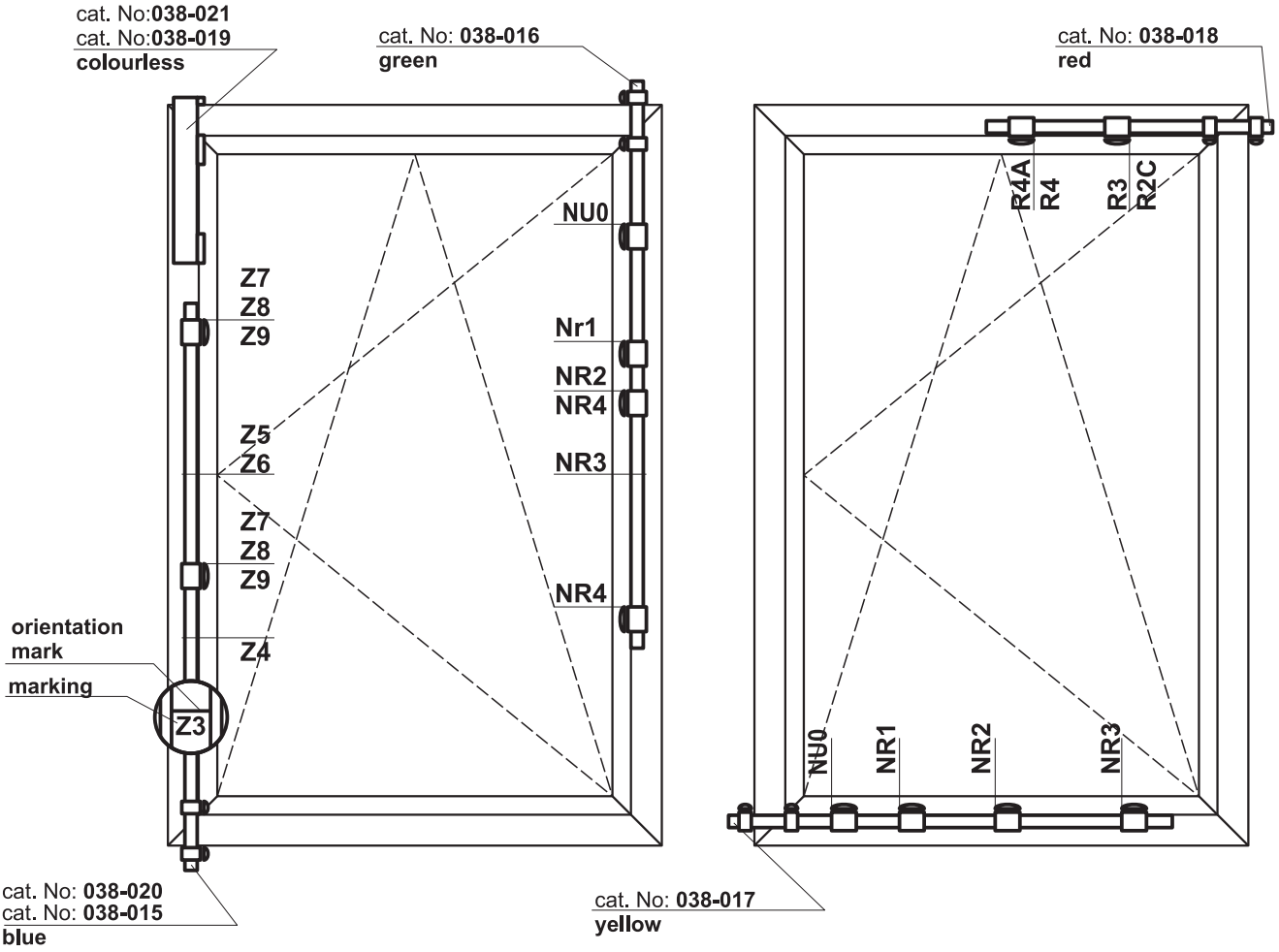

1. For proper assembling of striker plates the slider should be placed above orientation mark so that the marking is visible (eg. Z3).

2. Peripheral striker plates should be placed before fitting lower and upper hinge brackets and lower striker plate.

3. In balcony doors (for drive gear **Z7 - Z9**) blue jig **038-020** should be used and for **NR4** green jig **038-016** .

4. Instruction refers to using the above jigs in Dr/Eurofalz windows with peripheral striker plate Dr 12 cat. No **027-008**, and Dr/Euronut with peripheral striker plate cat No **027-011**.

JIGS FOR FITTING
PERIPHERAL STRIKER PLATES
IN WINDOWS Tw, DR WITH DRIVE GEAR M

corner.....	T-shaped or slider jig	(RU)	cat. No: **038-019 -** peripheral striker plate and striker plate R/R13
drive gear M.....	extendible jig	(RU+R)....	purple; cat. No: **038-023** - drive gear M2 - M3
corner drive gear	slider jig	(RU+R)...	green; cat. No: **038-016** - rear of the sash RU, top of the sash R
corner drive gear	slider jig	(RU+R)...	yellow; cat. No **038-017** - for sashes with Sw > 800 mm (bottom of the sash RU+R)
stay.....	slider jig	(RU).....	red; cat. No **038-018** - stay 2C - 4A

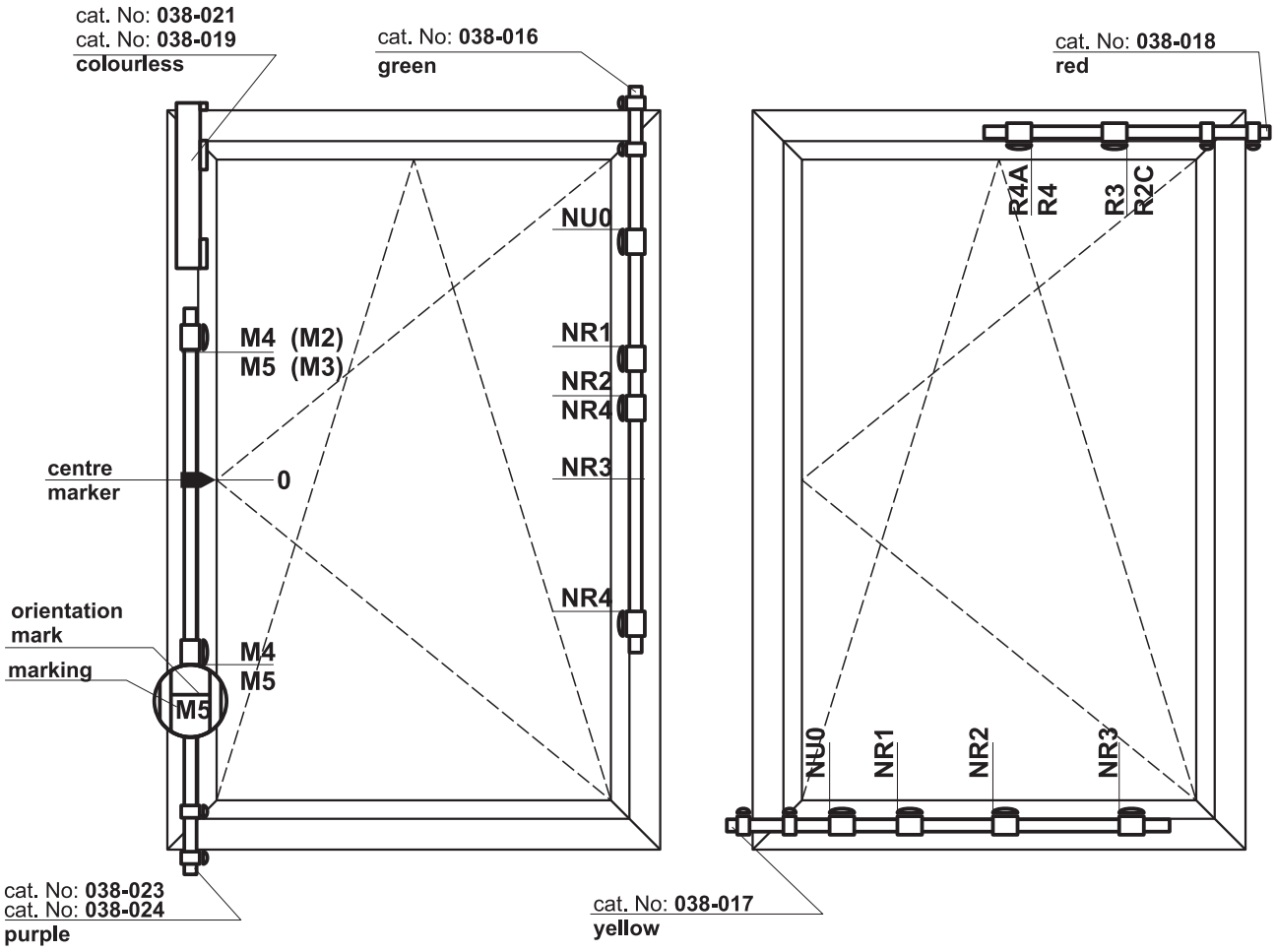

NOTES:

1. For proper assembling of striker plates the slider should be placed above orientation mark so that the marking is visible, eg. M5.

2. Peripheral striker plates should be placed before assembling upper and lower brackets, and lower striker plate.

3. In balcony doors for M4 - M5 drive gears jig cat. No **038-02** should be used, for **NR4** - green jig cat. No **038-016.**

4. Instruction concerns using above jigs in Dr/Eurofalz windows with peripheral striker plate Dr 12 cat. No **027-008**, and Dr/ Euronut with peripheral striker plate cat. No **027-011**.

JIG FOR DRIVE GEAR M2/M3, M4/M5
USING RULES

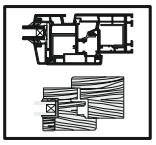

Item	*Jig name*	*Catalogue No*
1	Symmetrical extendible jig M2/M3	**038-023**
2	Symmetrical extendible jig M4/M5	**038-024**

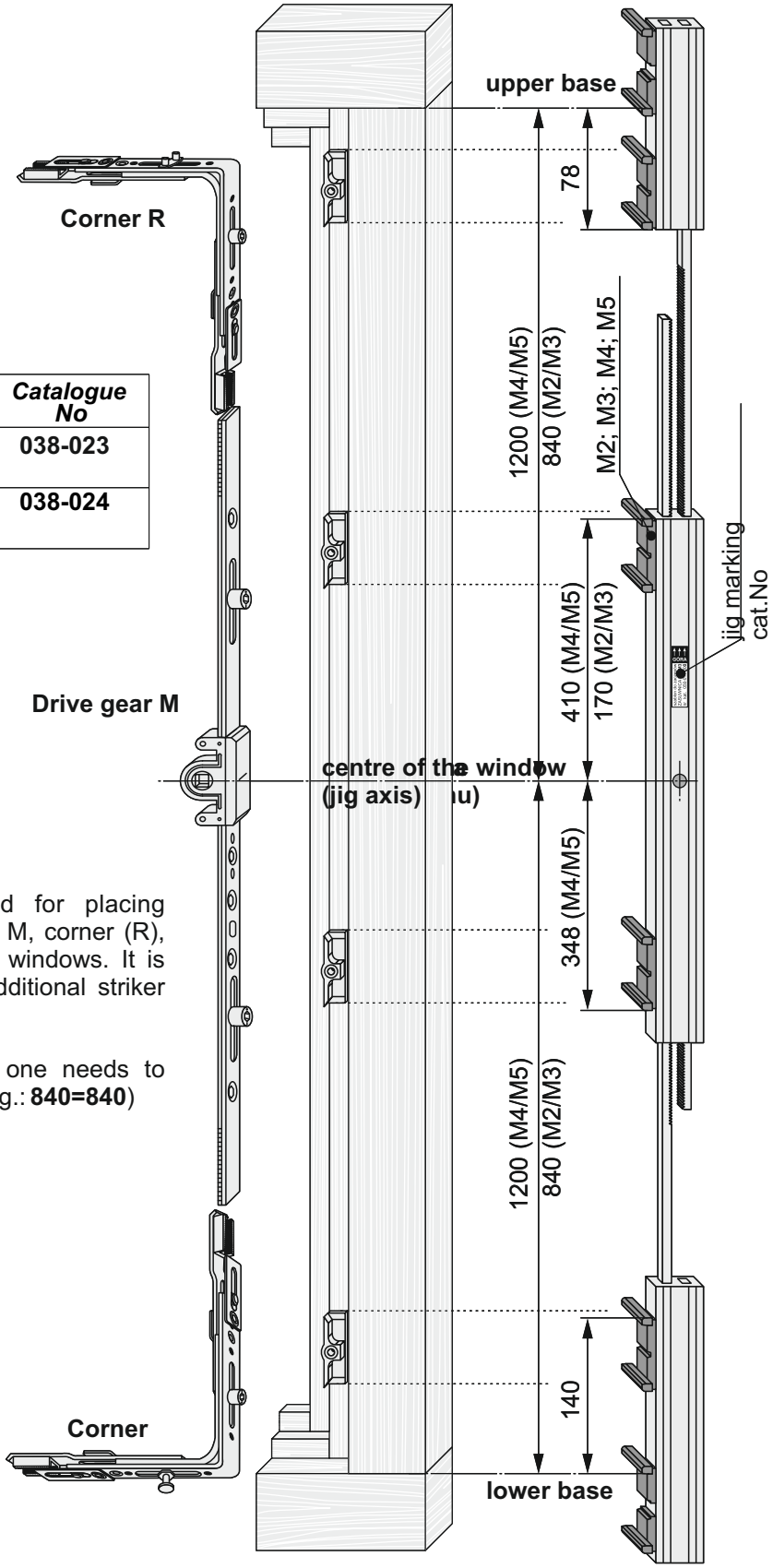

USE:
symmetrical-extendible jig is used for placing peripheral striker plate of drive gear M, corner (R), corner (U1) in wooden and PVC-U windows. It is possible to complete the jig with additional striker plate sockets.

NOTE:
to check if the jig is symmetrical one needs to establish the upper and lower buffer (eg.: **840=840**)

JIG FOR THE FRAME
ROMB TwO HARDWARE
USING RULES

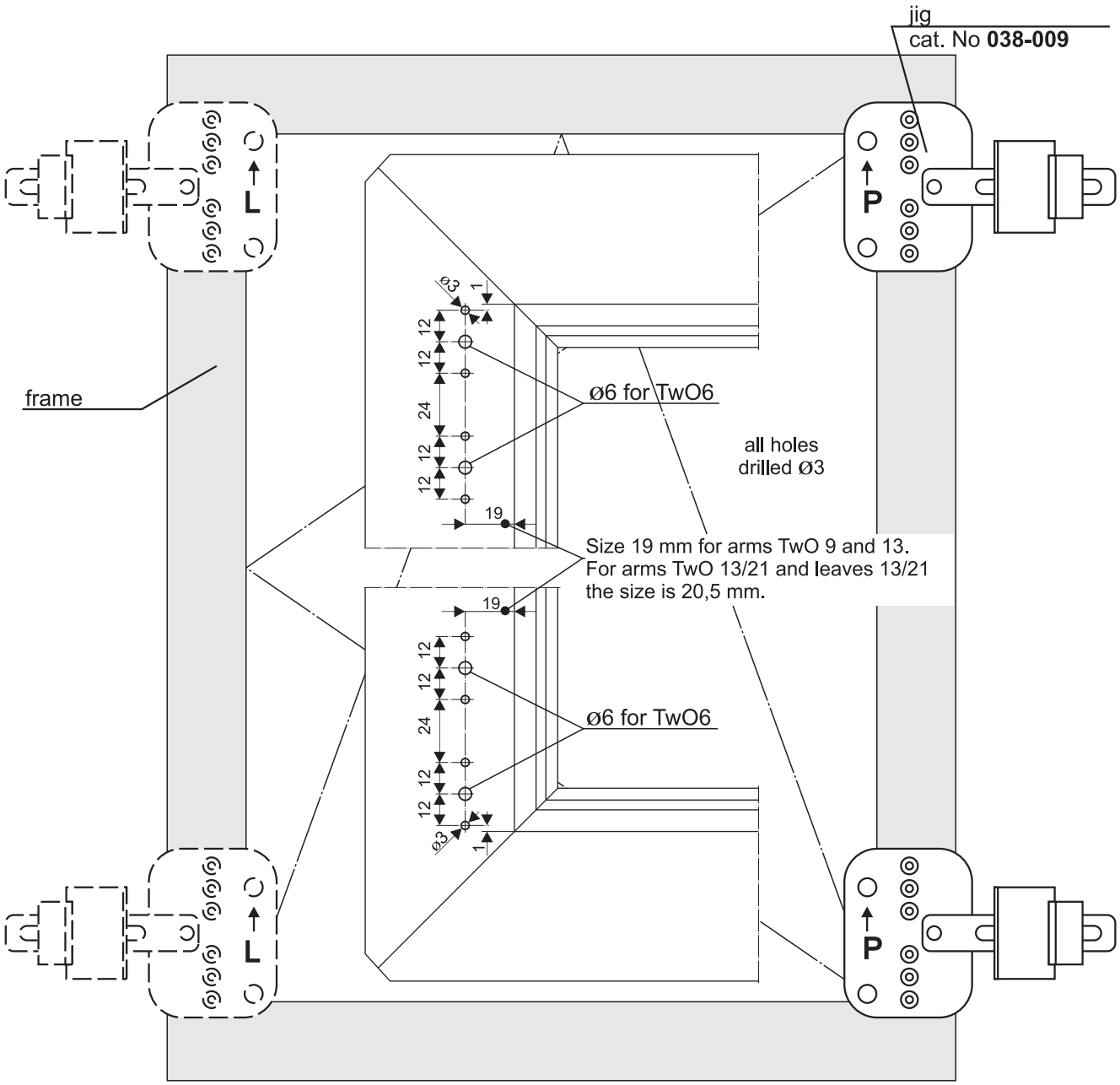

NOTE:
Drilling holes ø3 for upper hinge bracket TwO3 and lower or notch hinge bracket TwO3
acc. to jig cat. No **038-009.**
Drilling holes ø6 for upper hinge bracket TwO6 and lower hinge bracket TwO6:
acc. to jig cat. No **038-012.**

Method of re-arrangement of the jig cat. No 038-001 or cat. No 038-002

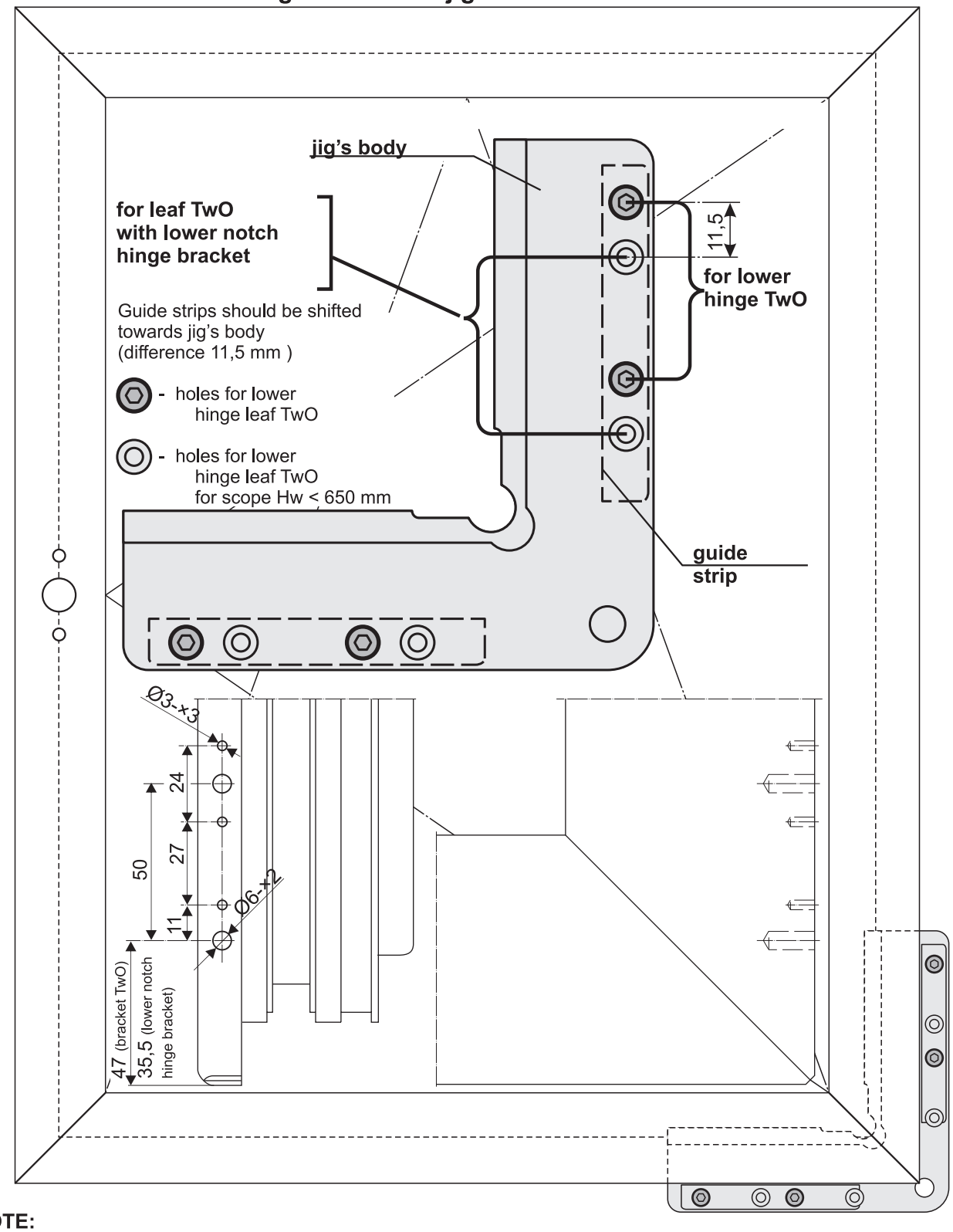

NOTE:
drilling holes: Ø6 mm - 2 holes Ø3 mm - 3 holes for lower hinge leaf TwO,
acc. to jig cat. No **038-001** or cat. No **038-002** (bending of the rebate 5°).
For the scope Hw < 650 mm it is necessary to re-arrange the jig used for the sash TwO into jig working with lower notch hinge leaf.

LIST OF JIGS AND TOOLS FOR FITTING

Item	Destination	Catalogue No	Characteristics
1	Jig for the frame Uhb/Lhb Tw	038-010	Tw 21 Ø3/Ø6
2	Jig for the frame Uhb/Lhb Ø6	038-012	TwO Ø6
3	Jig for the frame Uhb/Lhb Ø3	038-009	TwO 9/20 13/20
4	Jig for the sash Lhl/TwO	038-001	lower hinge leaf TwO
5	Jig for the sash Lhl/TwO	038-002	lower hinge leaf TwO 5°
6	Jig for corner striker plates Dr - Euronut	038-019	T-shaped jig R9
7	Jig for rebate hinge	038-043	Tw windows
8	Jig for striker plates Tw/Dr drive gear Z3 - Z6	038-015	blue
9	Jig for striker plates Tw/Dr drive gear N0 - Nr4	038-016	green (rear part of the sash)
10	Jig for striker plates Tw/Dr drive gear N0 - Nr3	038-017	yellow (bottom of the sash)
11	Jig for striker plates Tw/Dr stay 2C - 4A	038-018	red
12	Jig for striker plates Tw/Dr drive gear Z7 - Z9	038-020	blue
13	Jig for striker plates Tw/Dr drive gear M2, M3	038-023	symmetrical, purple
14	Jig for striker plates Tw/Dr drive gear M4, M5	038-024	symmetrical, purple
15	Jig for connected pressure pad	038-015	jig with adjustment
16	Jig for pressure pad Dr/Tw	038-014	jig without adjustment
17	Jig for tilt hinge Tw / Dr	038-039	jig with adjustment
18	Jig for the frame 2×Ø34	038-011	S5 Dr hardware (milling)
19	Jig for the frame Ø34	038-008	DrC hardware (milling)
20	Jig for striker plate R9/R13	038-021	Tw corner R
21	Jig for striker plate UD/Tw	038-022	corner U1 hardwareTw
22	Jig for drive gear striker plate S01/SR01	038-051	extendible jig
23	Jig for drive gear striker plate S02/SR02	038-052	extendible jig
24	Jig for drive gear striker plate S03/SR03	038-053	extendible jig
25	Jig for drive gear striker plate S1A/SR1A	038-025	extendible jig
26	Jig for drive gear striker plate S2/SR2	038-026	extendible jig
27	Jig for drive gear striker plate S3/SR3	038-027	extendible jig
28	Jig for drive gear striker plate S4/SR4	038-028	extendible jig
29	Manual cutter	038-045	cutter
30	Pneumatic cutter	038-046	press
31	Hook key (mandrel)	038-050	for the mandrel TwO / S5
32	Hex key 6-angle 4	038-049	for adjusting
33	Jig for corner striker plates	038-054	striker plate RS vertical
34	Jig for striker plates - drive gear 7,5 M2/M3	038-029	extendible jig
35	Jig for striker plates - drive gear 7,5 M4/M5	038-030	extendible jig
36	Jig for PWD striker plate	038-031	only PWD striker plate
37	Tilt hinge jig -frame	038-041	for separate fitting
38	Tilt hinge jig -sash	038-042	for separate fitting
39	Jig for the sash TwO/3	038-005	lower hinge leaf TwO/3
40	Jig for the handle 7,5M/AL	038-003	MB59
41	Jig for the handle 15M/AL	038-004	Mb59
42	Frame jig TwO 3/3,6/AL	038-013	ALU KARO
43	Jig for striker plates - drive gear ZNR0/ZNR1	038-032	
44	Jig for striker plates - drive gear ZNR0/ZNR3	038-033	
45	Jig for striker plates - drive gear ZNR0/ZNR5	038-034	
46	Jig for striker plates - drive gear ZNR0/ZNR8	038-035	
47	Jig for striker plates - drive gear ZN2/ZN3	038-036	
48	Jig for striker plates - drive gear ZN4/ZN5	038-037	
49	Jig for striker plates - drive gear ZN6/ZN8	038-038	
50	Jig for the sash Lhl/TwO3	038-006	rebate with 7° angle
51	Jig for the sash Lhl/TwO6	038-007	rebate with 7° angle
52	Locker jig	038-044	Takt 150

LIST OF JIGS AND TOOLS FOR FITTING

Item	Destination	Catalogue No	Characteristics
53	Cutting measure (M)	038-047	drive gear M
54	Cutting measure (ZN)	038-048	drive gear ZN

ZERTIFIKAT ◆ CERTIFICATE ◆ 認証書 ◆ СЕРТИФИКАТ ◆ CERTIFICADO ◆ CERTIFICAT

Management Service

CERTIFICATE

The Certification Body
of TÜV SÜD Management Service GmbH

certifies that

"METALPLAST KARO ZŁOTÓW" Spółka Akcyjna
PL-77-400 Złotów, ul. Kujańska 10 e

has established and applies
a Quality Management System for

Development, production and sale
of metal mounts for windows and doors

An audit was performed, Report No. **70001281**

Proof has been furnished that the requirements
according to

ISO 9001:2008

are fulfilled. The certificate is valid until **2012-06-25**

Certificate Registration No. **12 100 7621 TMS**

Munich, 2009-10-15

QMS-TGA-ZM-07-92

MS01/09.07

Quality Policy

Aims of the quality policy:

- Manufacturing and sales of products and services of the highest quality, determined on the basis of legal and market conditions as well as requirements specified together with the customer.
- Quality is our priority. Commitment to quality means that all employees participate jointly to this end.
- Quality means customer's satisfaction. Customer's expectations constitute an actively changing, superior goal that requires the quality oriented management to be constantly improved.

To achieve these goals, the following rules must be observed:

- Preventing defects is better than discovering them.
- Quality reduces costs.
- If the quality is embedded in production, installation and distribution of products there is no need to keep excessive stocks of materials and semi-finished products.
- Use top quality suppliers and strive to optimise their number.
- Team-work is more effective than commanding. Times where an employee used to tell their superior: I have done what I had to do and it is your turn now, are gone.
- All employees are responsible for quality.
- Everyone has incredible possibilities.

The Management Board and METALPLAST – KARO Z£OTÓW S.A. carry out the quality policy with dynamic and innovative approach to management through quality while taking into consideration :

- Quality culture,
- Promotion of quality awareness,
- Motivation for better performance,
- Quality improvement programs,
- General participation of employed personnel in achieving quality goals.

The Management Board of METALPLAST – KARO Z£OTÓW S.A. establishes and introduces the Quality Policy and determines responsibility of the management regarding the maintenance of all quality undertakings now and in the future.

President of the Management Board

PREZES ZARZĄDU
Dariusz Filipowicz

Quality Policy introduced 17.07.2003 r. Updated 24-08-2009

Metalplast KARO Zlotów S.A. ul. Kujañska 10e, 77-400 Z³otów
www.metalplast-karo.com.pl. e-mail: romb@gk-kety.com.pl
Regional Court in Poznañ, Nowe Miasto and Wilda in Poznañ - IX Economy Department
KRS 0000120632 NIP 767-000-00-75 REGON 000057388
tel. +48 672650401, fax +48 672650400, share capital 20.900.000 PLN

WARRANTY CARD

METALPLAST KARO Z£OTÓW S.A. grants warranty for ALUKARO hardware. Warranty is granted for 60 months from date of purchase.

During this time warrantor guarantees to the user cost-free repair of damages caused by the defects of ALUKARO hardware related to:

- Loss of stability of windows and balcony doors elements due to a defective functioning of ALUKARO hardware.
- Inappropriate anti-corrosion protection of steel elements of ALUKARO hardware.

METALPLAST KARO Z£OTÓW S.A. shall be released from warranty-related obligations if the identified defects were caused by the user, in particular:

- Inappropriate usage of the hardware
- Inappropriate choice of hardware elements for the intended purpose (weight, height and width of the sashes)
- Assembling of ALUKARO hardware not in accordance with fitting instructions
- Using screws for hardware assembling other than made of acid-resistant steel
- Inappropriate hardware maintenance, not in accordance with hardware maintenance instructions by the manufacturer.

Warranty for the durability of hardware protective coats remains valid if they are not affected by any aggressive influence of external environment or any aggressive substances used for the maintenance of windows and balcony doors.
In case of justified warranty-related claims we guarantee free-of charge replacing of faulty parts.
Warranty does not cover reimbursement of other costs.

Warranty does not cover defects if:

- Hardware contains parts or sets produced by other manufacturers
- Defects are caused by force majeure, for example natural disasters.

Management Board Plenipotentiary
for Quality Management
Ł£ukasz Mo³drzyk

Management Board President
Dariusz Filipowicz

Metalplast KARO Zlotów S.A. ul. Kujañska 10e, 77-400 Z³otów
www.metalplast-karo.com.pl. e-mail: romb@gk-kety.com.pl
Regional Court in Poznañ, Nowe Miasto and Wilda in Poznañ - IX Economy Department
KRS 0000120632 NIP 767-000-00-75 REGON 000057388
tel. +48 672650401, fax +48 672650400, share capital 20.900.000 PLN

WARRANTY CARD

METALPLAST KARO Z£OTÓW S.A. grants warranty for ROMB, ROMB 2000 and ROMB 3000 hardware. Warranty is granted for 10 years from date of purchase.

During this time warrantor guarantees cost-free repair of damages caused by hardware defects related to:

- Loss of stability of windows and balcony doors elements due to defective hardware functioning
- Improper anti-corrosion protection of hardware steel elements.

METALPLAST KARO Z£OTÓW S.A. shall be released from its warranty obligations if the identified defects were caused by the user, in particular:

- Inappropriate usage of the hardware
- Inappropriate choice of hardware elements for the intended purpose (weight, height and width of the sashes)
- Hardware assembling not in accordance with fitting instructions.

Warranty for the durability of hardware protective coats remains valid, if they are not affected by any aggressive influence of external environment or any aggressive substances used for the maintenance of windows and balcony doors.
In case of justified warranty-related claims we guarantee free-of-charge replacing of faulty parts. Warranty does not cover reimbursement of other costs.

Warranty does not cover hardware defects if:

- Hardware contains parts or sets produced by other manufacturers
- Defects were caused by force majeure, for example natural disasters.

Management Board Plenipotentiary
for Quality Management

Ł£ukasz Mo³drzyk

Metalplast KARO Zlotów S.A. ul. Kujañska 10e, 77-400 Z³otów
www.metalplast-karo.com.pl. e-mail: romb@gk-kety.com.pl
Regional Court in Poznañ, Nowe Miasto and Wilda in Poznañ - IX Economy Department
KRS 0000120632 NIP 767-000-00-75 REGON 000057388
tel. +48 672650401, fax +48 672650400, share capital 20.900.000 PLN

WARRANTY CARD

METALPLAST KARO Z£OTÓW S.A. grants a warranty for the hardware: lever locking rod for windows and tilt transoms TAKT-150.
Warranty is granted for 24 months from date of purchase.

During this period the warrantor warrants to the user cost-free repair of damages caused by hardware defects related to:

- Loss of stability of windows and transoms elements due to a defective hardware functioning
- Improper anti-corrosion protection of hardware steel elements.

METALPLAST KARO Z£OTÓW S.A. shall be released from its warranty obligations, if the identified defects were caused by the user, in particular:

- Inappropriate usage of the hardware
- Inappropriate choice of hardware elements for the intended purpose (weight, height and width of window sashes and transoms)
- Assembling performed not in accordance with fitting instructions

The warranty for duration of hardware protective coats remains valid if they are not affected by any aggressive influence of external environment or any aggressive substances used for maintenance of windows and transoms.
In case of justified warranty-related claims we guarantee free of charge replacing of faulty parts. Warranty does not cover reimbursement of other costs.

Warranty does not cover hardware damages if:

- Hardware contains parts or sets produced by other manufacturers
- Damages are caused by force majeure, for example natural disasters.

Management Board Plenipotentiary
for Quality Management
£ukasz Mo³drzyk